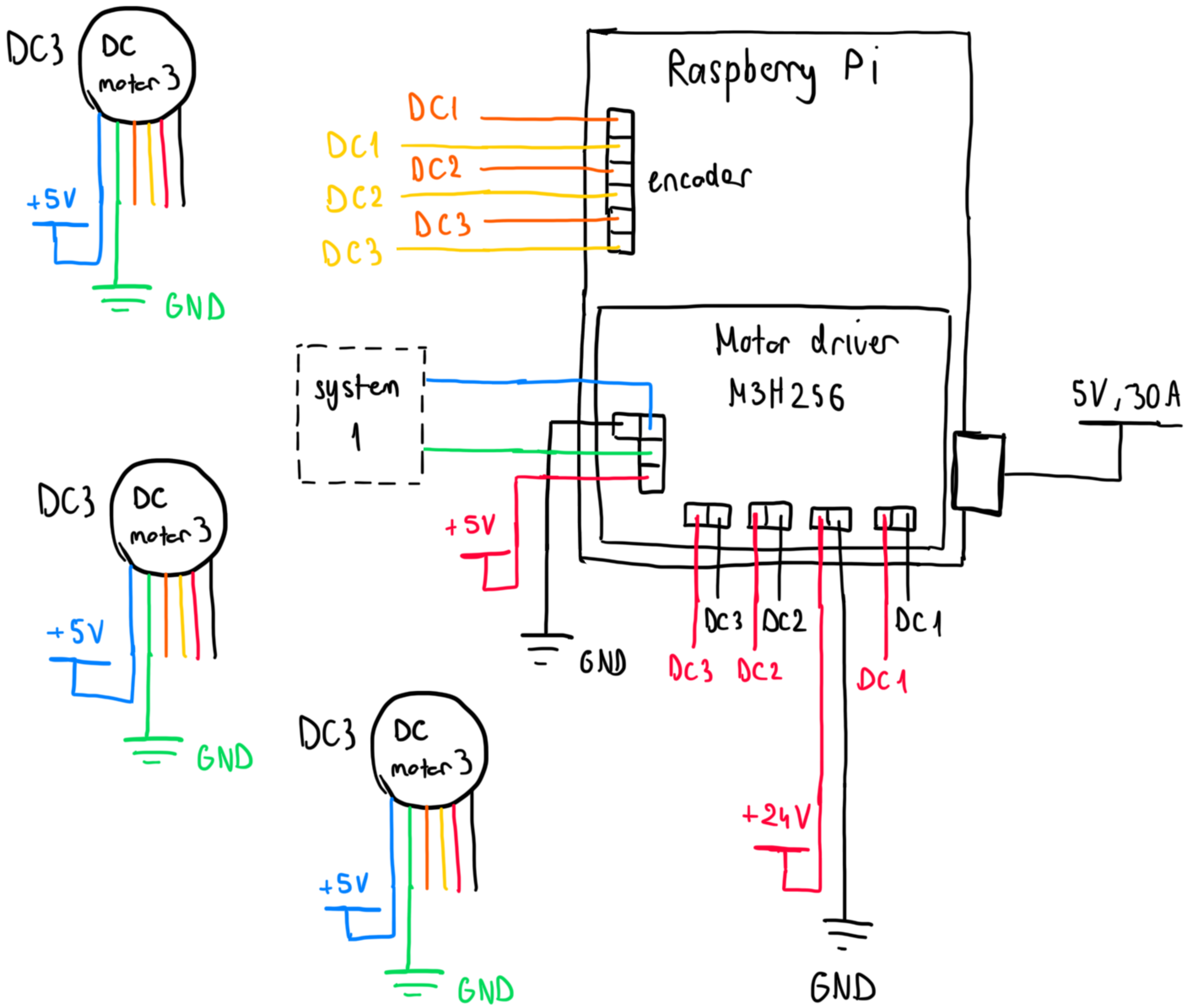
DC3
DC motor 3
+5V
GND
DC1
DC1
DC2
DC2
DC3
DC3
Raspberry Pi
encoder
system 1
Motor driver
M3H256
5V, 30A
+5V
GND
DC3
DC2
DC1
DC3
DC2
DC1
+24V
GND
DC3
DC motor 3
+5V
GND
DC3
DC motor 3
+5V
GND

system 1:

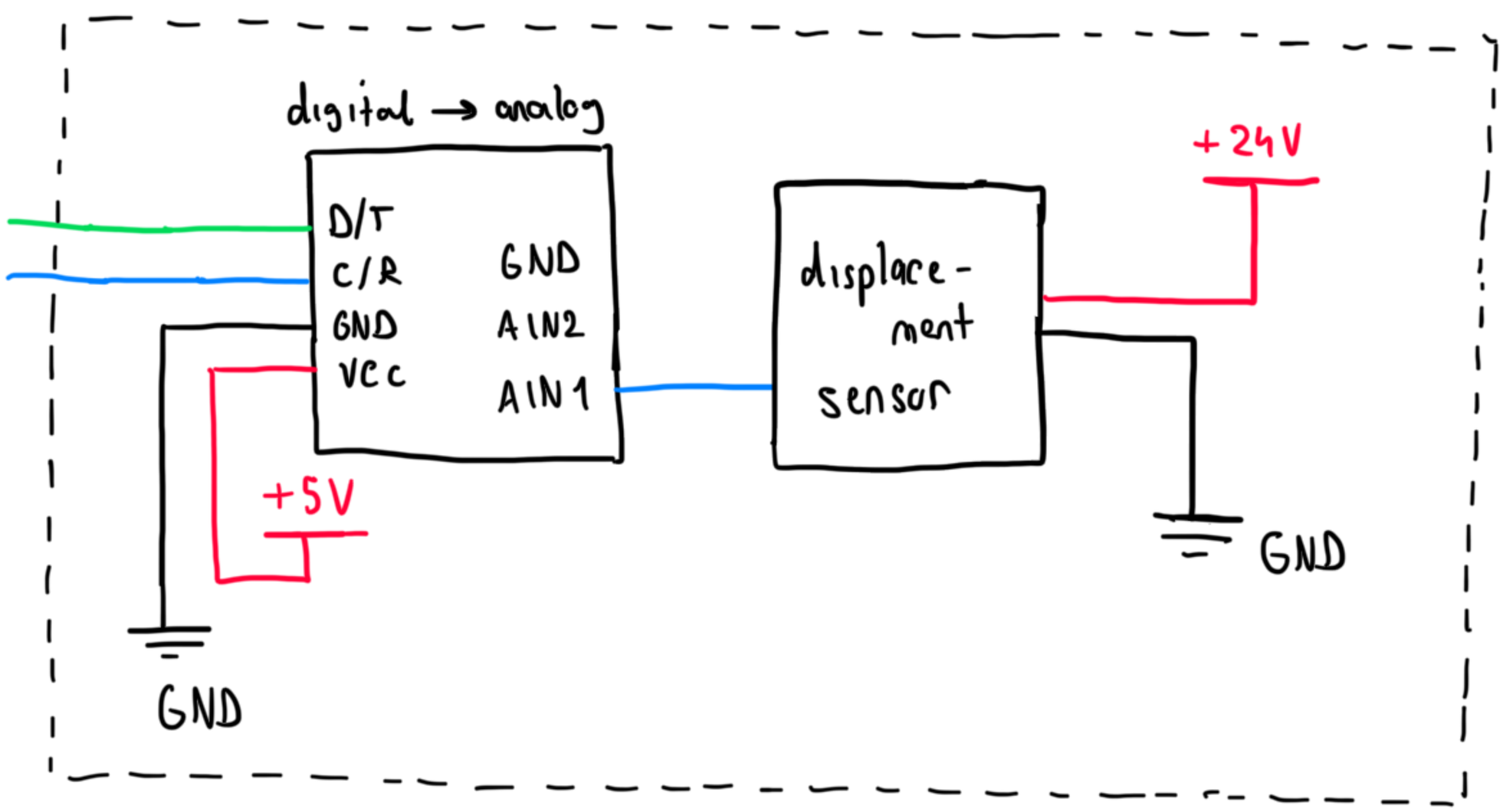
digital → analog
D/T
C/R
GND
VCC
GND
AIN2
AIN1
displace-
ment
sensor
+24V
+5V
GND
GND