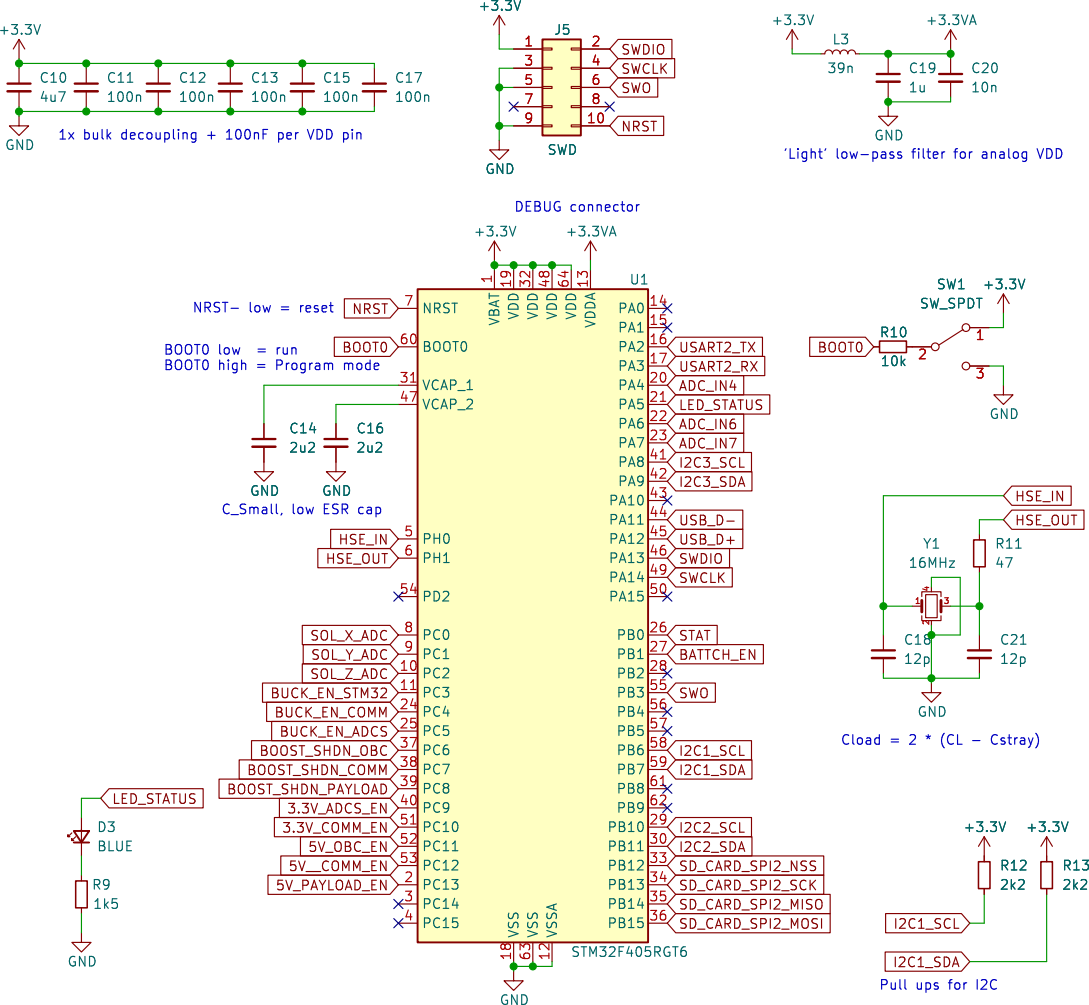
+3.3V
C10 4u7
C11 100n
C12 100n
C13 100n
C15 100n
C17 100n
GND
1x bulk decoupling + 100nF per VDD pin
J5
SWDIO
SWCLK
SWO
NRST
SWD
DEBUG connector
+3.3VA
L3 39n
C19 1u
C20 10n
'Light' low-pass filter for analog VDD
U1
NRST- low = reset
BOOT0 low = run
BOOT0 high = Program mode
VCAP_1
VCAP_2
C14 2u2
C16 2u2
C_Small, low ESR cap
HSE_IN
HSE_OUT
PH0
PH1
PD2
SOL_X_ADC
SOL_Y_ADC
SOL_Z_ADC
BUCK_EN_STM32
BUCK_EN_COMM
BUCK_EN_ADCS
BOOST_SHDN_OBC
BOOST_SHDN_COMM
BOOST_SHDN_PAYLOAD
3.3V_ADCS_EN
3.3V_COMM_EN
5V_OBC_EN
5V__COMM_EN
5V_PAYLOAD_EN
USART2_TX
USART2_RX
ADC_IN4
LED_STATUS
ADC_IN6
ADC_IN7
I2C3_SCL
I2C3_SDA
USB_D-
USB_D+
SWDIO
SWCLK
STAT
BATTCH_EN
SWO
I2C1_SCL
I2C1_SDA
I2C2_SCL
I2C2_SDA
SD_CARD_SPI2_NSS
SD_CARD_SPI2_SCK
SD_CARD_SPI2_MISO
SD_CARD_SPI2_MOSI
STM32F405RGT6
SW1 SW_SPDT
R10 10k
Y1 16MHz
R11 47
C18 12p
C21 12p
Cload = 2 * (CL - Cstray)
D3 BLUE
R9 1k5
R12 2k2
R13 2k2
Pull ups for I2C