Downloaded from orbit.dtu.dk on: 2 11, 2026

DTU Library

An Updated Version of the IEEE RTS 24-Bus System for Electricity Market and Power System Operation Studies.

Ordoudis, Christos; Pinson, Pierre; Morales González, Juan Miguel; Zugno, Marco

Publication date:
2016

Document Version
Publisher's PDF, also known as Version of record

Link back to DTU Orbit

Citation (APA):
Ordoudis, C., Pinson, P., Morales González, J. M., & Zugno, M. (2016). *An Updated Version of the IEEE RTS 24-Bus System for Electricity Market and Power System Operation Studies.* Technical University of Denmark.

General rights
Copyright and moral rights for the publications made accessible in the public portal are retained by the authors and/or other copyright owners and it is a condition of accessing publications that users recognise and abide by the legal requirements associated with these rights.

- Users may download and print one copy of any publication from the public portal for the purpose of private study or research.
- You may not further distribute the material or use it for any profit-making activity or commercial gain
- You may freely distribute the URL identifying the publication in the public portal

If you believe that this document breaches copyright please contact us providing details, and we will remove access to the work immediately and investigate your claim.

An Updated Version of the IEEE RTS 24-Bus System for Electricity Market and Power System Operation Studies

Christos Ordoudis[a], Pierre Pinson[a], Juan M. Morales[b], Marco Zugno[b]
[a] Department of Electrical Engineering
[b] Department of Applied Mathematics and Computeer Science
Technical University of Denmark
Kgs. Lyngby, Denmark

1 Introduction

The single-area version of the IEEE Reliability Test System [1] is updated to a version that can be readily used for electricity market and power system operation studies. The 24-bus power system was updated based on data from [1]-[5]. Additionally, it is properly modified to accommodate six wind farms in order to enable the use of the power system in case studies with high renewable energy penetration.

2 System Description

The 24-bus power system is illustrated in Figure 1. The slack bus of the system is node 13.

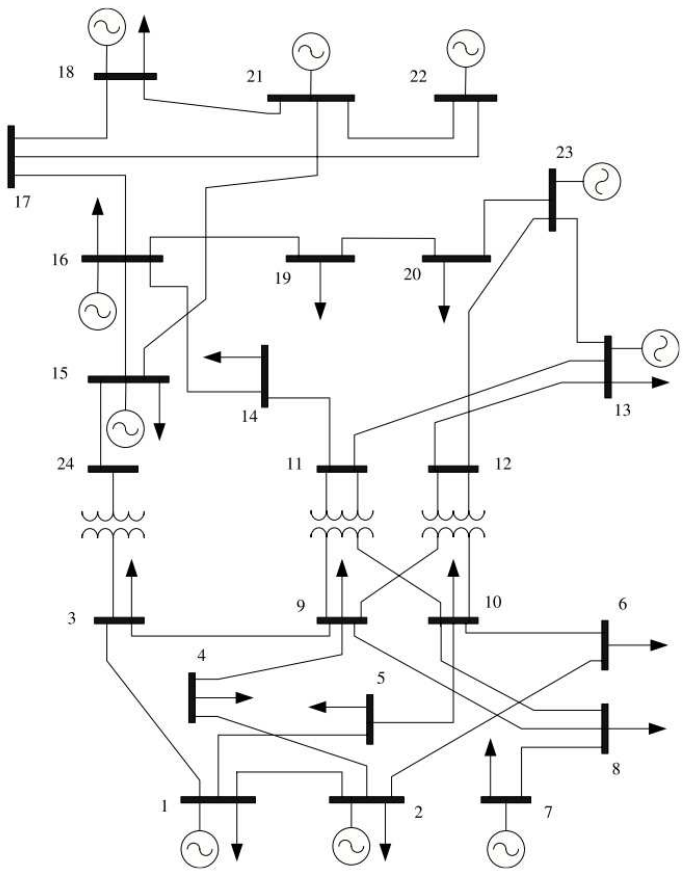

Figure 1: 24-bus power system – Single area RTS-96

2.1 Unit Data

Tables 1-2 present the generating units' data of the power system. The generating units offer a single block of energy, up and down reserve capacity. Table 1 provides the technical data of generating units and Table 2 provides the costs and initial state of the generating units at the beginning of the scheduling horizon. The data is based on [1]-[5].

Table 1: Technical Data of Generating Units

Unit #	Node	$P_i^{\max}$ (MW)	$P_i^{\min}$ (MW)	R_i^{+} (MW)	R_i^{-} (MW)	R_i^{U} (MW/h)	R_i^{D} (MW/h)	UT (h)	DT (h)
1	1	152	30.4	40	40	120	120	8	4
2	2	152	30.4	40	40	120	120	8	4
3	7	350	75	70	70	350	350	8	8
4	13	591	206.85	180	180	240	240	12	10
5	15	60	12	60	60	60	60	4	2
6	15	155	54.25	30	30	155	155	8	8
7	16	155	54.25	30	30	155	155	8	8
8	18	400	100	0	0	280	280	1	1
9	21	400	100	0	0	280	280	1	1
10	22	300	300	0	0	300	300	0	0
11	23	310	108.5	60	60	180	180	8	8
12	23	350	140	40	40	240	240	8	8

Table 2: Costs and Initial State of Generating Units

Unit #	C_i (\$/MWh)	C_i^{u} (\$/MWh)	C_i^{d} (\$/MWh)	C_i^{+} (\$/MWh)	C_i^{-} (\$/MWh)	C_i^{su} (\$)	P_i^{ini} (MW)	U_i^{ini} (0/1)	T_i^{ini} (h)
1	13.32	15	14	15	11	1430.4	76	1	22
2	13.32	15	14	15	11	1430.4	76	1	22
3	20.7	10	9	24	16	1725	0	0	-2
4	20.93	8	7	25	17	3056.7	0	0	-1
5	26.11	7	5	28	23	437	0	0	-1
6	10.52	16	14	16	7	312	0	0	-2
7	10.52	16	14	16	7	312	124	1	10
8	6.02	0	0	0	0	0	240	1	50
9	5.47	0	0	0	0	0	240	1	16
10	0	0	0	0	0	0	240	1	24
11	10.52	17	16	14	8	624	248	1	10
12	10.89	16	14	16	8	2298	280	1	50

A positive T_i^{ini} shows the time periods that the generating unit has been online at the beginning of scheduling horizon. A negative one shows the time periods that the generating unit has been offline at the beginning of scheduling horizon.

2.2 Load Data

In Figure 2, the load profile is illustrated. Table 3 provides the total system demand per hour and Table 4 presents the node location of the loads, as well as the load at each node as a percentage of the total system demand. The load data is based on [2].

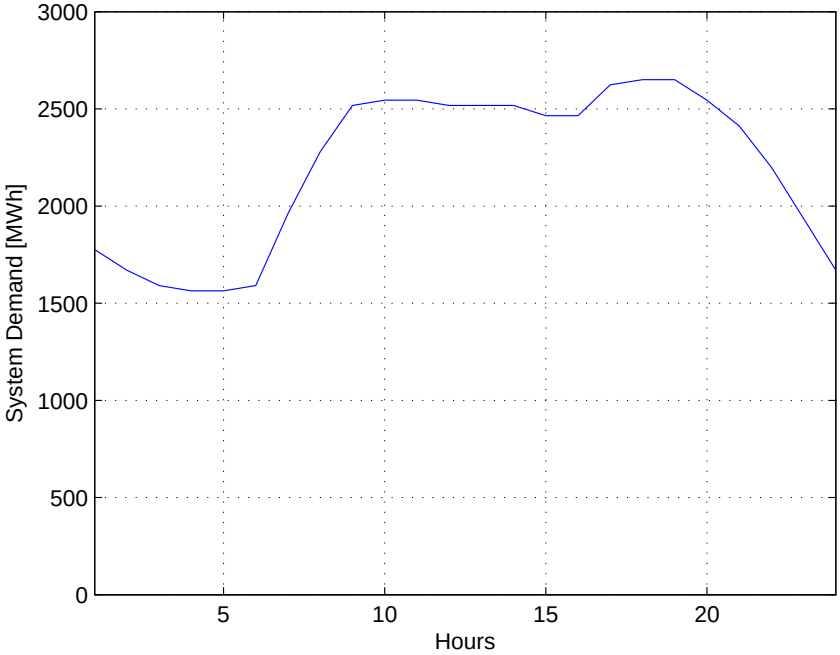

Figure 2: System Demand Profile

Table 3: Load Profile

Hour	System demand (MW)	Hour	System demand (MW)
1	1775.835	13	2517.975
2	1669.815	14	2517.975
3	1590.3	15	2464.965
4	1563.795	16	2464.965
5	1563.795	17	2623.995
6	1590.3	18	2650.5
7	1961.37	19	2650.5
8	2279.43	20	2544.48
9	2517.975	21	2411.955
10	2544.48	22	2199.915
11	2544.48	23	1934.865
12	2517.975	24	1669.815

Table 4: Node Location and Distribution of the Total System Demand

Load #	Node	% of system load	Load #	Node	% of system load
1	1	3.8	10	10	6.8
2	2	3.4	11	13	9.3
3	3	6.3	12	14	6.8
4	4	2.6	13	15	11.1
5	5	2.5	14	16	3.5
6	6	4.8	15	18	11.7
7	7	4.4	16	19	6.4
8	8	6	17	20	4.5
9	9	6.1			

2.3 Transmission Lines

The transmission lines data is given in Table 5. The lines are characterized by the nodes that are connected, as well as the reactance and the capacity of each line. The data is based on [2].

Table 5: Reactance and Capacity of Transmission Lines

From	To	Reactance (p.u.)	Capacity (MVA)	From	To	Reactance (p.u.)	Capacity (MVA)
1	2	0.0146	175	11	13	0.0488	500
1	3	0.2253	175	11	14	0.0426	500
1	5	0.0907	350	12	13	0.0488	500
2	4	0.1356	175	12	23	0.0985	500
2	6	0.205	175	13	23	0.0884	500
3	9	0.1271	175	14	16	0.0594	500
3	24	0.084	400	15	16	0.0172	500
4	9	0.111	175	15	21	0.0249	1000
5	10	0.094	350	15	24	0.0529	500
6	10	0.0642	175	16	17	0.0263	500
7	8	0.0652	350	16	19	0.0234	500
8	9	0.1762	175	17	18	0.0143	500
8	10	0.1762	175	17	22	0.1069	500
9	11	0.084	400	18	21	0.0132	1000
9	12	0.084	400	19	20	0.0203	1000
10	11	0.084	400	20	23	0.0112	1000
10	12	0.084	400	21	22	0.0692	500

3 Implementation Including Wind Power Production

It is recommended to include six wind farms of 200 MW capacity at different locations throughout the grid. It is proposed to locate the wind farms at 3, 5, 7, 16, 21 and 23 nodes. In this case, as proposed in [7], the capacity on the transmission lines connecting the node pairs (15,21), (14,16) and (13,23) is reduced to 400 MW, 250 MW and 250 MW, respectively. This is done in order to introduce bottlenecks in the transmission system. Moreover, a set of available wind power scenarios is provided at [6]. The 24-bus power system or a modified version is used in various publications, such as at [4], [7] and [8].

References

[1] C. Grigg et al., "The IEEE Reliability Test System 1996. A report prepared by the reliability test system task force of the application of probability methods subcommittee," *IEEE Trans. Power Syst.*, vol. 14, no. 3, pp. 1010-1020, 1999.

[2] A. J. Conejo, M. Carrión and J. M. Morales, *Decision Making under Uncertainty in Electricity Markets*. New York: Springer, 2010, vol. 153.

[3] F. Bouffard, F. D. Galiana and A. J. Conejo, "Market-clearing with stochastic security - part II: case studies," *IEEE Trans. Power Syst.*, vol. 20, no. 4, pp. 1827-1835, 2005.

[4] J. M. Morales, M. Zugno, S. Pineda and P. Pinson, "Electricity market clearing with improved scheduling of stochastic production," *Eur. J. Oper. Res.*, vol. 235, no. 3, pp. 765-774, 2014.

[5] H. Pandzic, Y. Dvorkin, T. Qiu, Y. Wang, and D. Kirschen, "Unit commitment data for modernized IEEE RTS-96," *Library of the Renewable Energy Analysis Lab (REAL)*, University of Washington, Seattle, USA. Available at: http://www.ee.washington.edu/research/real/gams˙code.html.

[6] W. Bukhsh, Data for stochastic multiperiod optimal power flow problem, "Website," Mar. 2015, https://sites.google.com/site/datasmopf/.

[7] M. Zugno and A. J. Conejo, "A robust optimization approach to energy and reserve dispatch in electricity markets," *Eur. J. Oper. Res.*, vol. 247, no. 2, pp. 659-671, 2015.

[8] C. Ordoudis, P. Pinson, M. Zugno and J. M. Morales, "Stochastic unit commitment via progressive hedging–Extensive analysis of solution methods," in *Proc. IEEE Eindhoven PowerTech*, 2015.

Nomenclature

$P_i^{\max}$ Maximum power output of generating unit i.

$P_i^{\min}$ Minimum power output of generating unit i.

R_i^{+} Maximum up reserve capacity of generating unit i.

R_i^{-} Maximum down reserve capacity of generating unit i.

R_i^{U} Ramp up rate of generating unit i.

R_i^{D} Ramp down rate of generating unit i.

UT Minimum up time of generating unit i.

DT Minimum down time of generating unit i.

C_i Day-ahead offer price of generating unit i.

C_i^{u} Upward reserve capacity cost of generating unit i.

C_i^{d} Downward reserve capacity cost of generating unit i.

C_i^{+} Up regulation offer price of generating unit i.

C_i^{-} Down regulation offer price of generating unit i.

C_i^{su} Start-up cost of generating unit i.

P_i^{ini} Initial power output of generating unit i when t=0.

U_i^{ini} Stating whether generating unit i is online/offline when t=0.

T_i^{ini} Number of hours of which the generating unit i was in/out at the beginning of scheduling horizon.