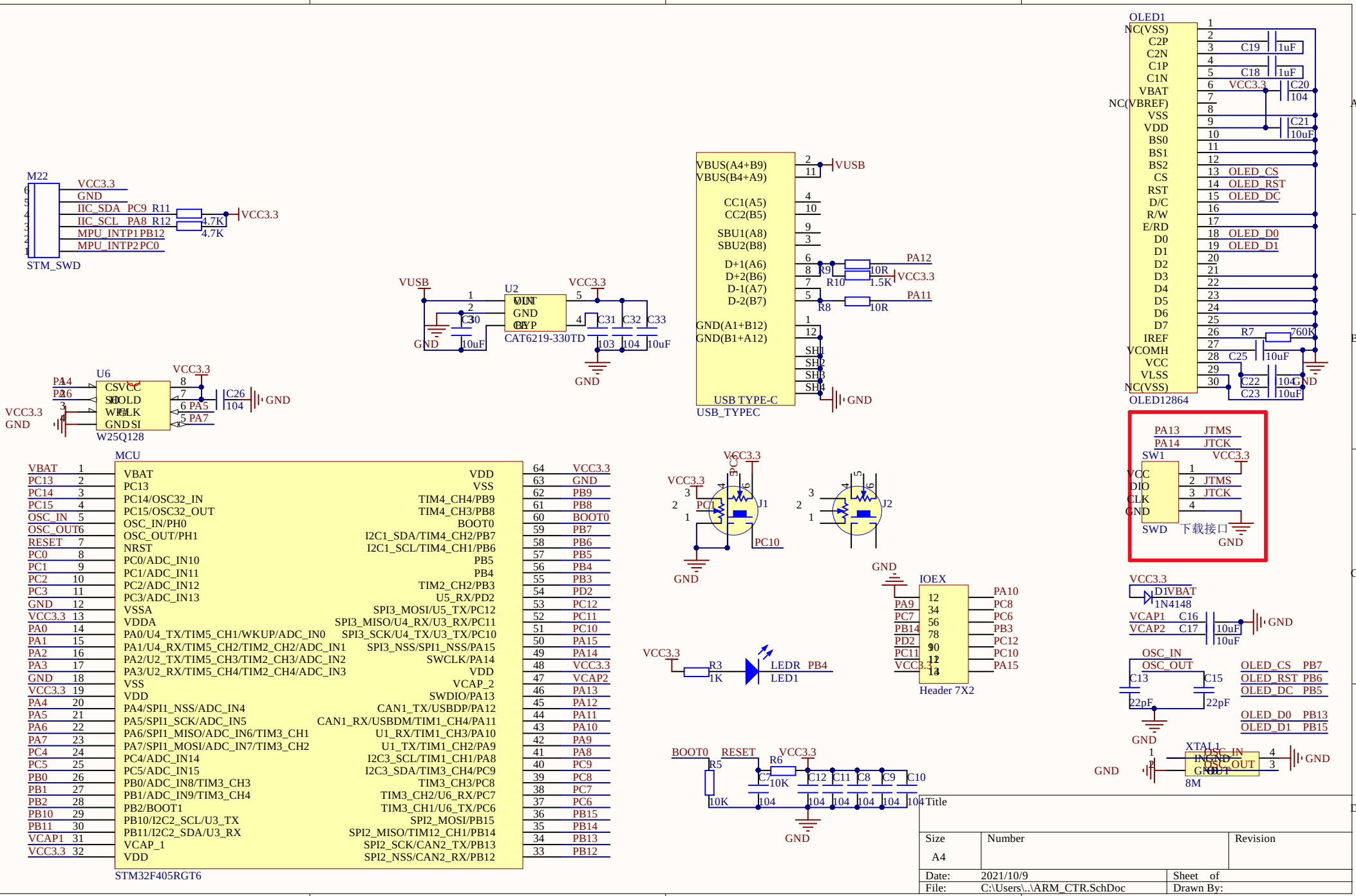
M22
VCC3.3
GND
IIC_SDA PC9 R11
IIC_SCL PA8 R12
MPU_INTP1 PB12
MPU_INTP2 PC0
4.7K
4.7K
STM_SWD
VUSB
U2
VCC3.3
GND
C30
10uF
CAT6219-330TD
C31 C32 C33
103 104 10uF
VBUS(A4+B9)
VBUS(B4+A9)
CC1(A5)
CC2(B5)
SBU1(A8)
SBU2(B8)
D+1(A6)
D+2(B6)
D-1(A7)
D-2(B7)
GND(A1+B12)
GND(B1+A12)
SH1
SH2
SH3
SH4
USB TYPE-C
USB_TYPEC
R9 10R
R10 1.5K
R8 10R
PA12
PA11
OLED1
NC(VSS)
C2P
C2N
C1P
C1N
VBAT
NC(VBREF)
VSS
VDD
BS0
BS1
BS2
CS
RST
D/C
R/W
E/RD
D0
D1
D2
D3
D4
D5
D6
D7
IREF
VCOMH
VCC
VLSS
NC(VSS)
OLED12864
C19 1uF
C18 1uF
C20 104
C21 10uF
OLED_CS
OLED_RST
OLED_DC
OLED_D0
OLED_D1
R7 760K
C25 10uF
C22 104
C23 10uF
U6
W25Q128
CS VCC
SO HOLD
WP CLK
GND SI
C26 104
PA14
PA16
PA5
PA7
MCU
STM32F405RGT6
VBAT
PC13
PC14
PC15
OSC_IN
OSC_OUT
RESET
PC0
PC1
PC2
PC3
GND
VCC3.3
PA0
PA1
PA2
PA3
PA4
PA5
PA6
PA7
PC4
PC5
PB0
PB1
PB2
PB10
PB11
VCAP1
PC14/OSC32_IN
PC15/OSC32_OUT
OSC_IN/PH0
OSC_OUT/PH1
NRST
PC0/ADC_IN10
PC1/ADC_IN11
PC2/ADC_IN12
PC3/ADC_IN13
VSSA
VDDA
PA0/U4_TX/TIM5_CH1/WKUP/ADC_IN0
PA1/U4_RX/TIM5_CH2/TIM2_CH2/ADC_IN1
PA2/U2_TX/TIM5_CH3/TIM2_CH3/ADC_IN2
PA3/U2_RX/TIM5_CH4/TIM2_CH4/ADC_IN3
PA4/SPI1_NSS/ADC_IN4
PA5/SPI1_SCK/ADC_IN5
PA6/SPI1_MISO/ADC_IN6/TIM3_CH1
PA7/SPI1_MOSI/ADC_IN7/TIM3_CH2
PC4/ADC_IN14
PC5/ADC_IN15
PB0/ADC_IN8/TIM3_CH3
PB1/ADC_IN9/TIM3_CH4
PB2/BOOT1
PB10/I2C2_SCL/U3_TX
PB11/I2C2_SDA/U3_RX
VCAP_1
VDD
VSS
TIM4_CH4/PB9
TIM4_CH3/PB8
BOOT0
I2C1_SDA/TIM4_CH2/PB7
I2C1_SCL/TIM4_CH1/PB6
PB5
PB4
TIM2_CH2/PB3
U5_RX/PD2
SPI3_MOSI/U5_TX/PC12
SPI3_MISO/U4_RX/U3_RX/PC11
SPI3_SCK/U4_TX/U3_TX/PC10
SPI3_NSS/SPI1_NSS/PA15
SWCLK/PA14
VCAP_2
SWDIO/PA13
CAN1_TX/USBDP/PA12
CAN1_RX/USBDM/TIM1_CH4/PA11
U1_RX/TIM1_CH3/PA10
U1_TX/TIM1_CH2/PA9
I2C3_SCL/TIM1_CH1/PA8
I2C3_SDA/TIM3_CH4/PC9
TIM3_CH3/PC8
TIM3_CH2/U6_RX/PC7
TIM3_CH1/U6_TX/PC6
SPI2_MOSI/PB15
SPI2_MISO/TIM12_CH1/PB14
SPI2_SCK/CAN2_TX/PB13
SPI2_NSS/CAN2_RX/PB12
PC1
PC10
J1
J2
R3 1K
LEDR PB4
LED1
IOEX
Header 7X2
PA9
PC7
PB14
PD2
PC11
PA10
PC8
PC6
PB3
PC12
PC10
PA15
D1VBAT
1N4148
VCAP1 C16
VCAP2 C17
10uF
OSC_IN
OSC_OUT
C13 22pF
C15 22pF
OLED_CS PB7
OLED_RST PB6
OLED_DC PB5
OLED_D0 PB13
OLED_D1 PB15
XTAL1
8M
BOOT0 R5 10K
RESET
R6 10K
C7 104
C12 104
C11 104
C8 104
C9 104
C10 104
PA13 JTMS
PA14 JTCK
SW1
VCC
DIO
CLK
GND
SWD 下载接口
Title
Size A4
Number
Revision
Date: 2021/10/9
File: C:\Users\..\ARM_CTR.SchDoc
Sheet of
Drawn By:

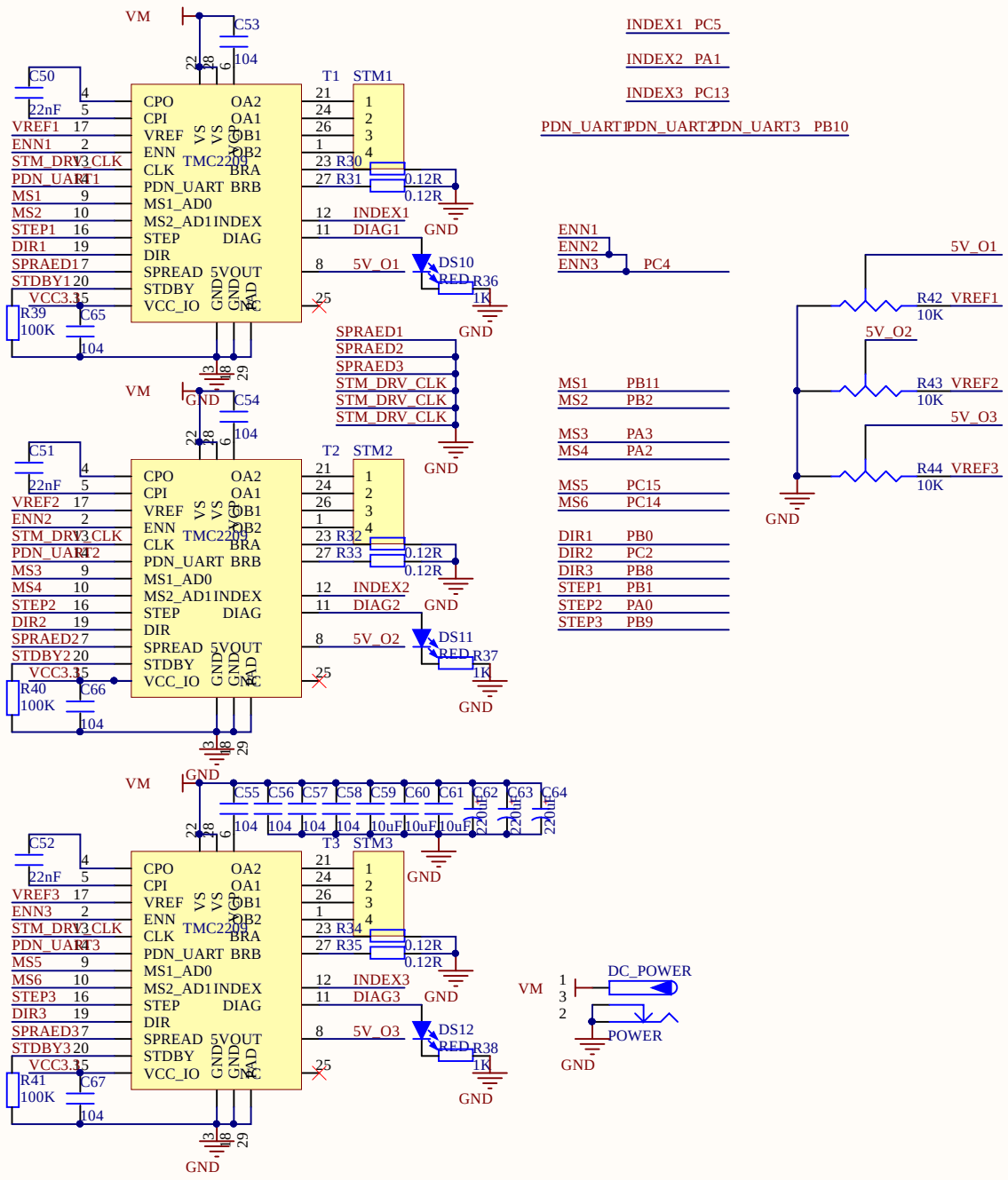

Title		
Size A4	Number	Revision
Date: 2021/10/9	Sheet of	
File: C:\Users\..\ARM_CTR_STM_DRV.SchDoc	Drawn By:	

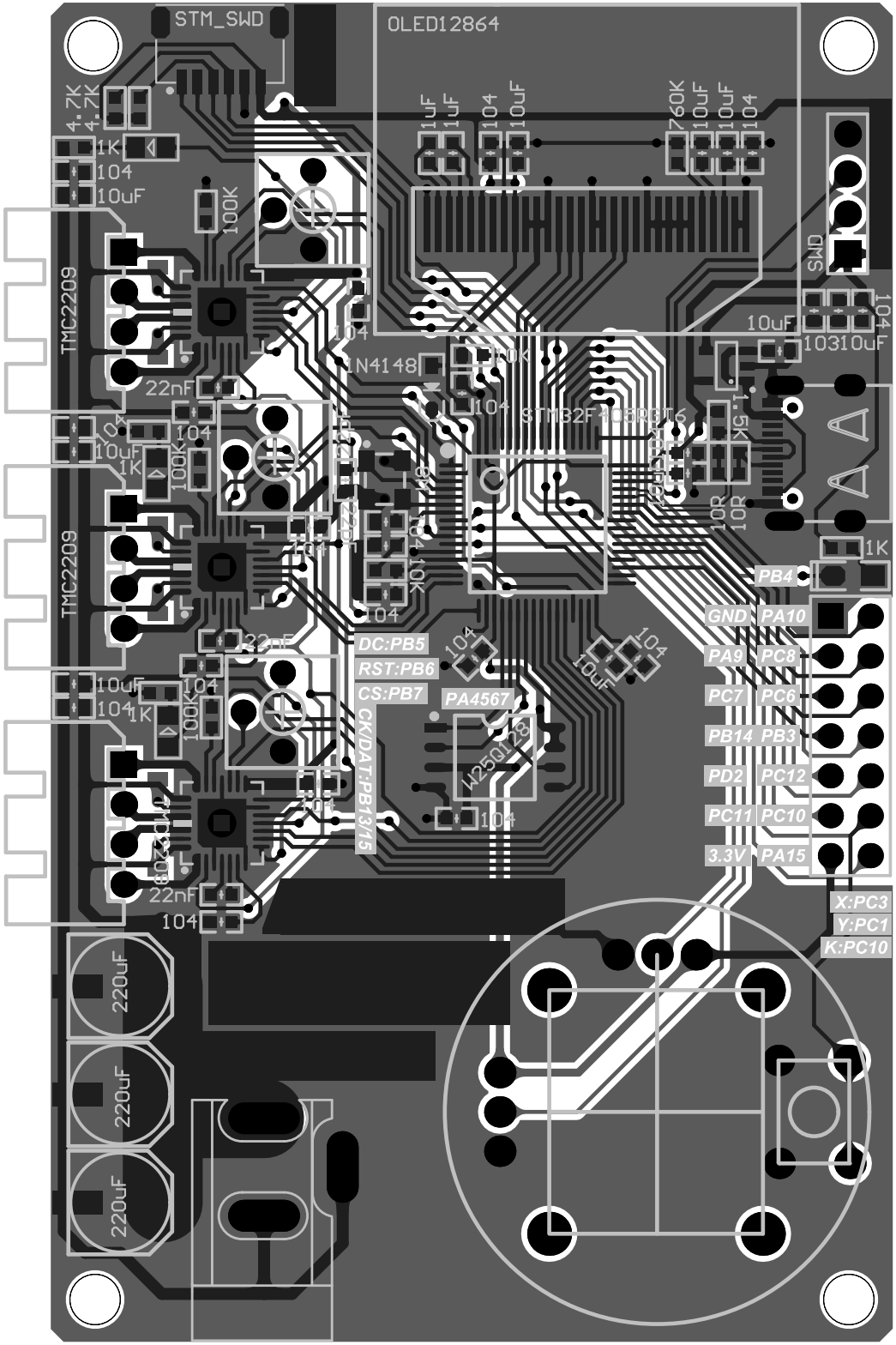
STM_SWD
OLED12864
TMC2209
TMC2209
STM32F103C8T6
N25Q128
PA4567
DC:PB5
RST:PB6
CS:PB7
CK/DAT:PB13/15
PB4
GND PA10
PA9 PC8
PC7 PC6
PB14 PB3
PD2 PC12
PC11 PC10
3.3V PA15
X:PC3
Y:PC1
K:PC10
SWD
220uF
220uF
220uF