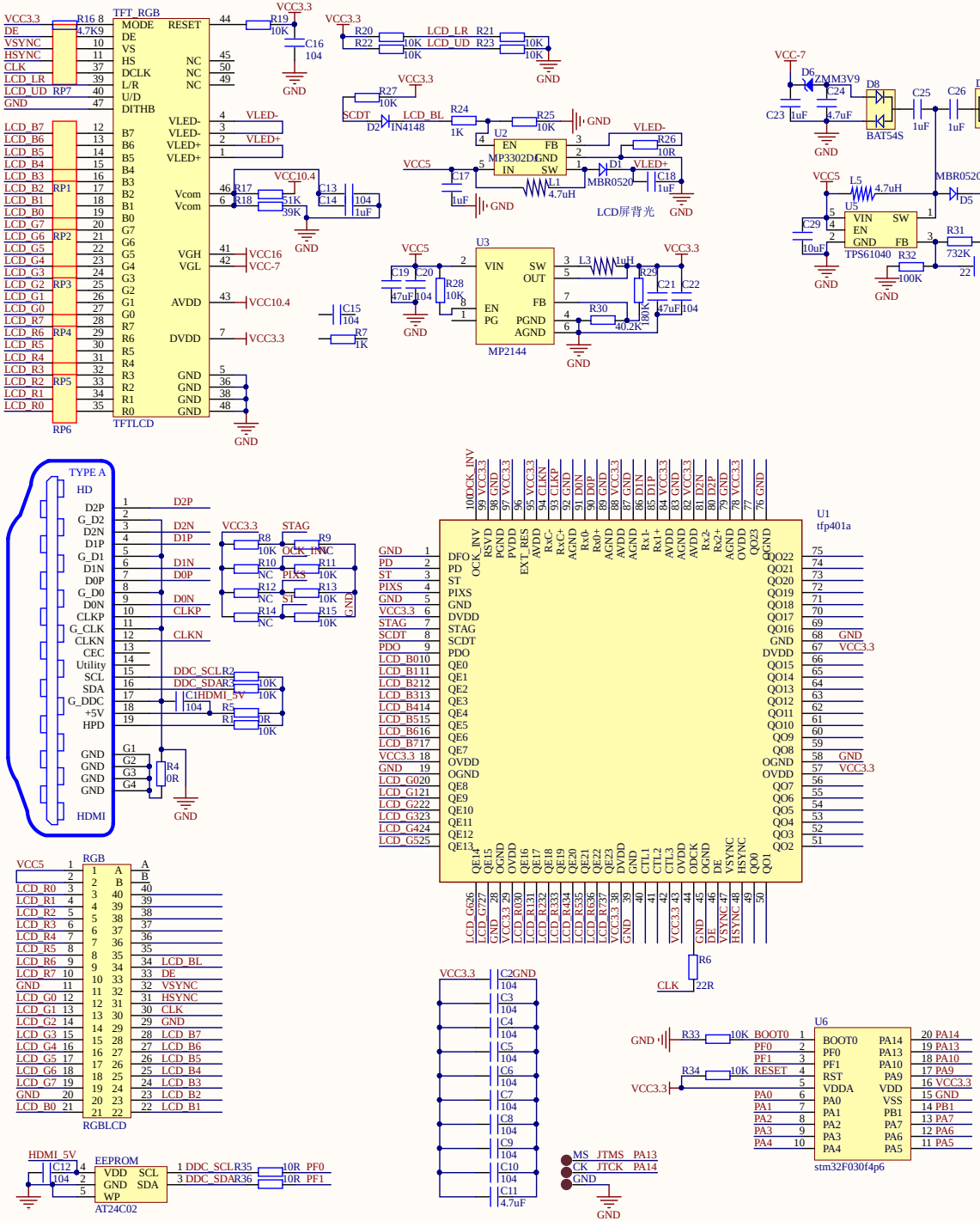

Title		
Size A3	Number	Revision
Date: 2021/2/20		Sheet of
File: C:\Users\..\HDMI_to_RGB.SchDoc		Drawn By:

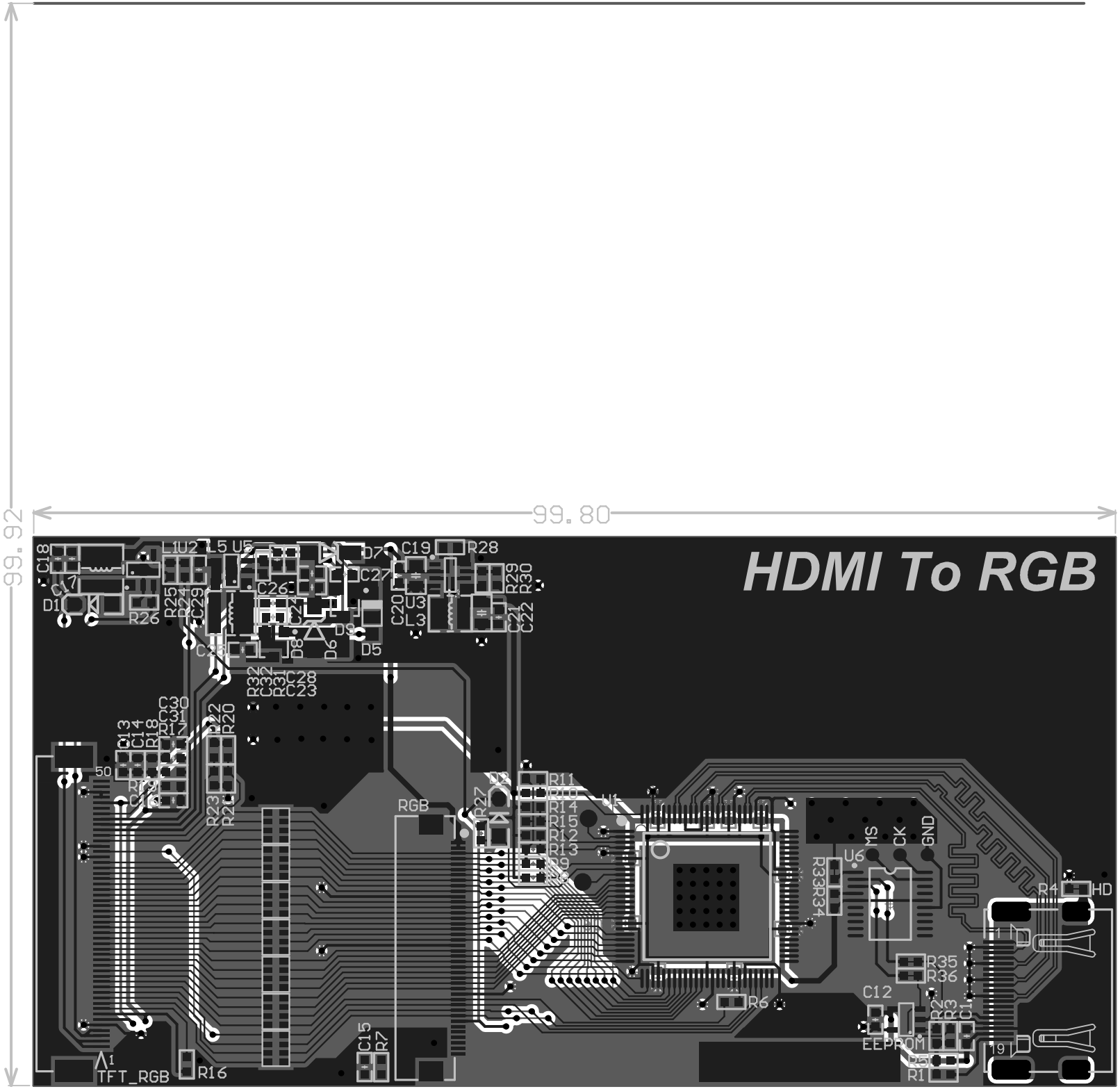
99.80
99.92
HDMI To RGB
TFT_RGB
RGB
EEPROM
HD
GND
CK
MS