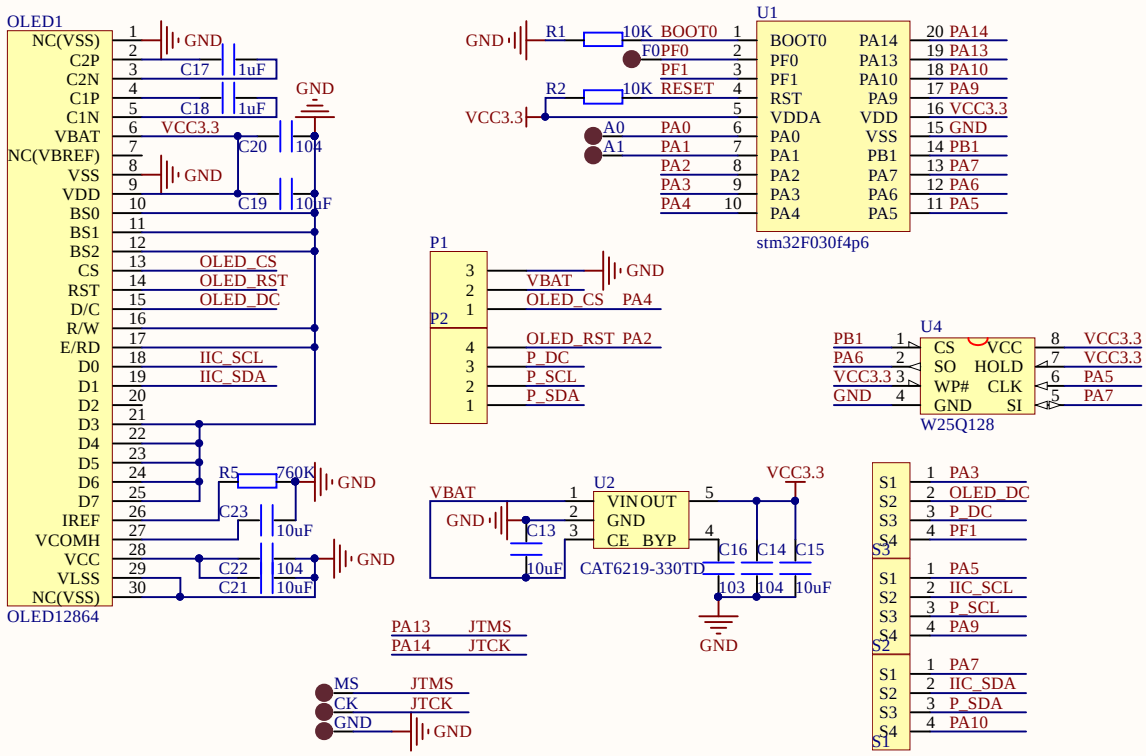

Title		
Size A4	Number	Revision
Date: 2020/12/20		Sheet of
File: F:\STM32资料\..\OLED_MODEL.SchDoc		Drawn By:

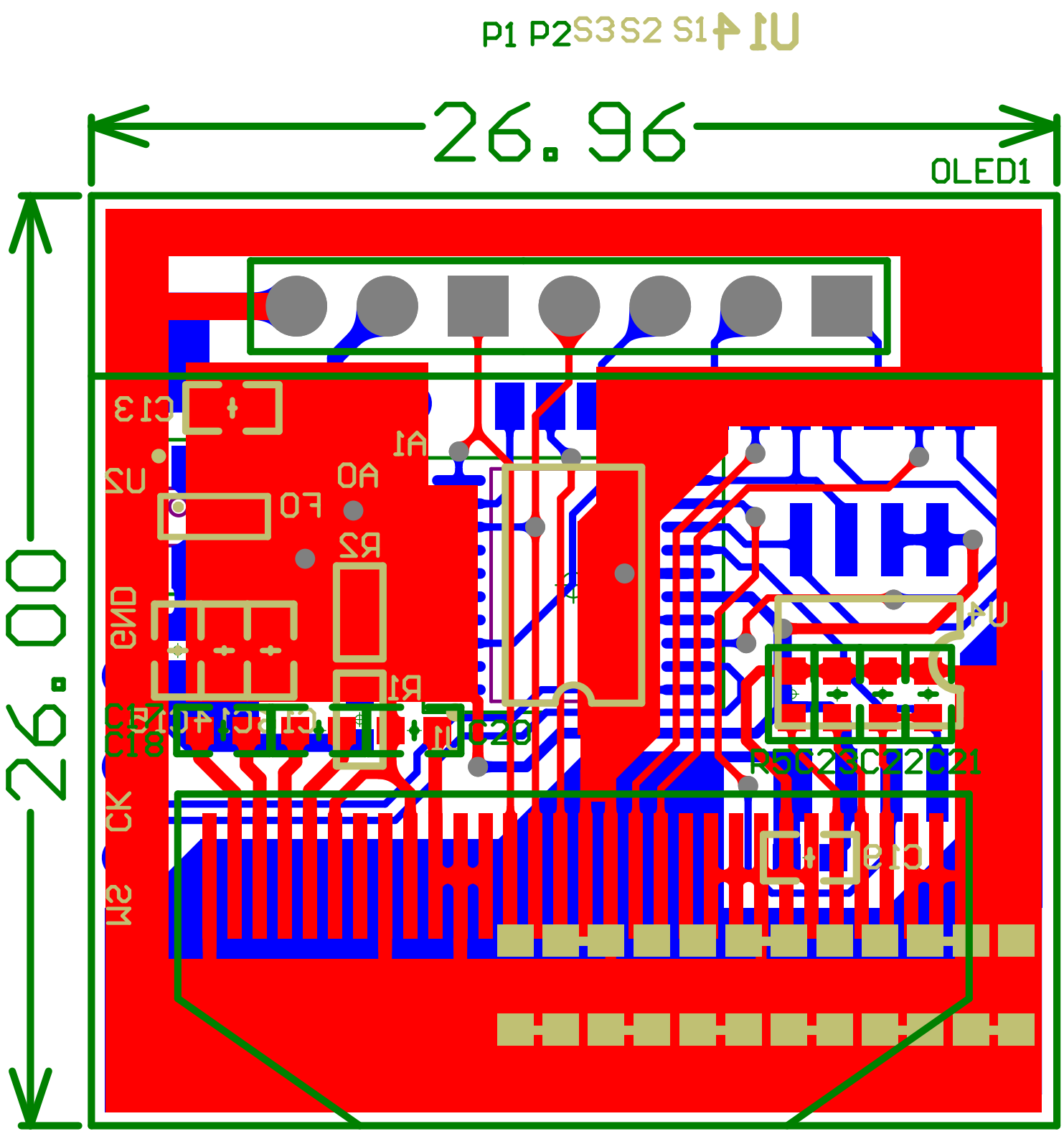
P1 P2 S3 S2 S1 4 U1
26.96
OLED1
26.00
C13
U2
A1
A0
F0
R2
GND
R1
C20
C19
CK
SW
U4
R5 C23 C22 C21
C18

Comment	Description	Designator	Footprint	LibRef	Quantity
TEST POINT	测试点	A0, A1, CK, F0, GND, MS	TP-1.5	TEST-POINT	6
10uF		C13, C15, C19, C21, C23	C 0603_L	C	5
104		C14, C20, C22	C 0603_L	C	3
103		C16	C 0603_L	C	1
1uF		C17, C18	C 0603_L	C	2
OLED12864		OLED1	OLED_0.96	OLED12864	1
Header 3	Header, 3-Pin	P1	HDR2.54-LI-3P	Header 3	1
Header 4	Header, 4-Pin	P2	HDR2.54-LI-4P	Header 4	1
10K		R1, R2	R 0603_L	R	2
760K		R5	R 0603_L	R	1
selecter		S1, S2, S3	selector_4	selector_4	3
stm32F030f4p6		U1	TSSOP20_N	stm32f030	1
CAT6219-330TD	3.3V 500mA LDO	U2	SOT23-5N	CAT6219-330TD	1
W25Q128	W25X16;SST25VF016;MX	U4	SOIC-8	W25X16	1