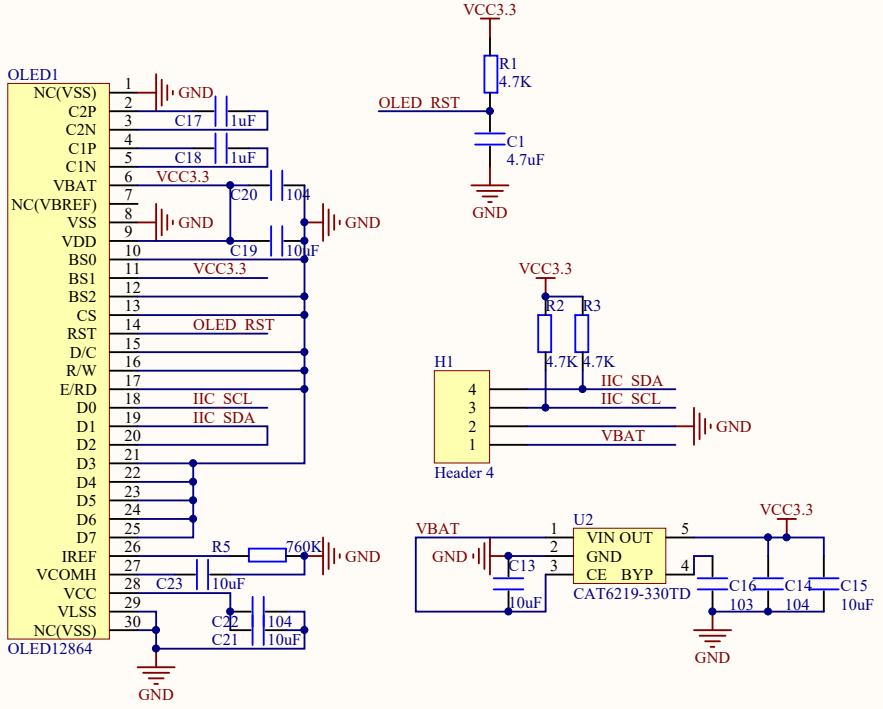

Title		
Size A4	Number	Revision
Date: 2019/10/20		Sheet of
File: C:\Users\..\OLED.SchDoc		Drawn By:

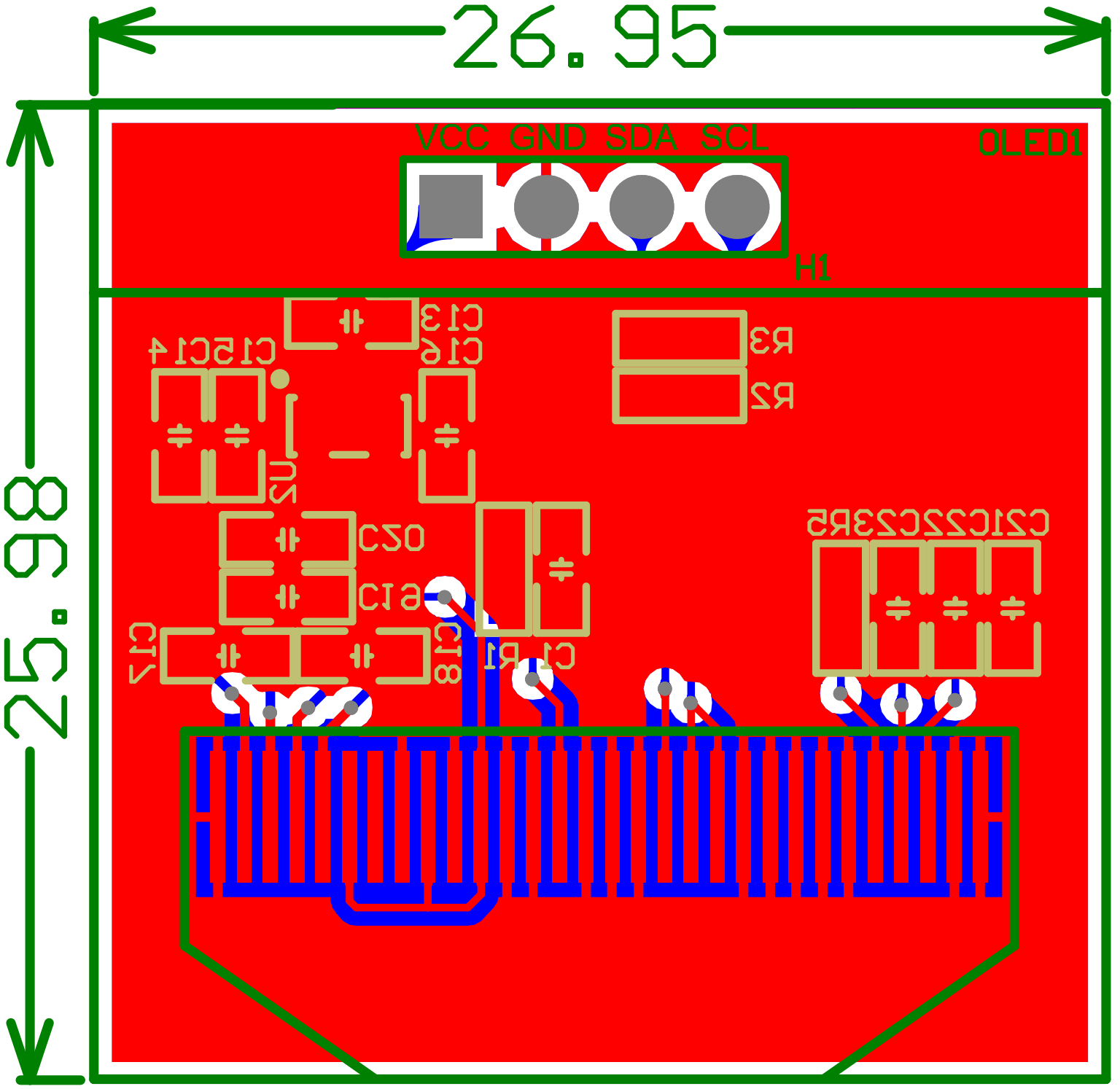
26.95
25.98
VCC GND SDA SCL
OLED1
H1
C13
C16
C15
C14
R3
R2
U2
C20
C19
C17
C18
R1
C1
C21
C22
C23
R5