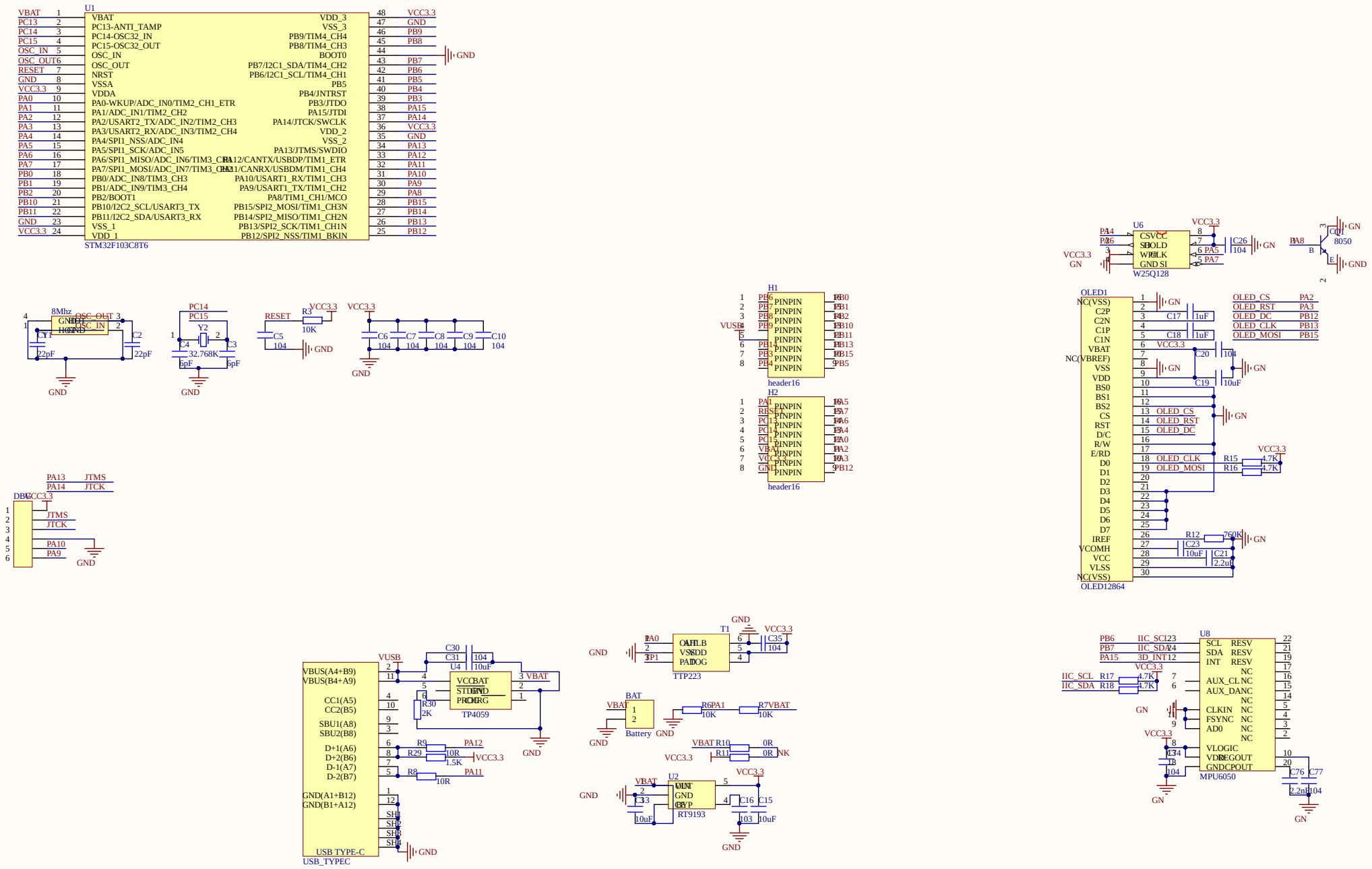

Title		
Size A3	Number	Revision
Date: 2021/12/17		Sheet of
File: C:\Users\..\MINIOLED.SchDoc		Drawn By:

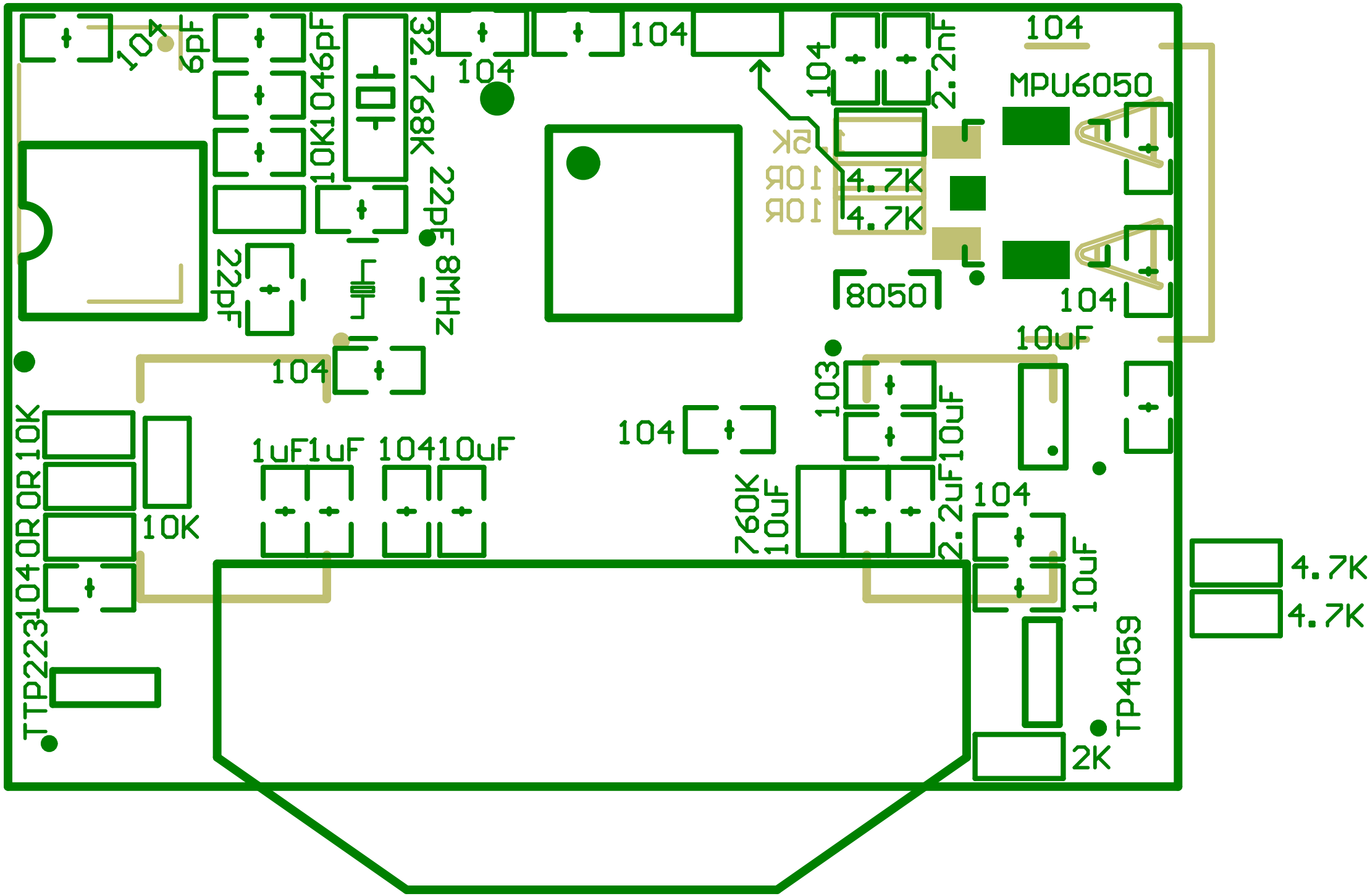
104
6pF
104
10K
104
6pF
32.768K
104
104
104
2.2nF
104
MPU6050
5K
10R
10R
4.7K
4.7K
22pF
8MHz
22pF
8050
104
10uF
104
103
10uF
104
1uF
1uF
104
10uF
760K
10uF
2.2uF
104
10uF
10K
10K
0R
0R
104
TTP223
TP4059
2K
4.7K
4.7K