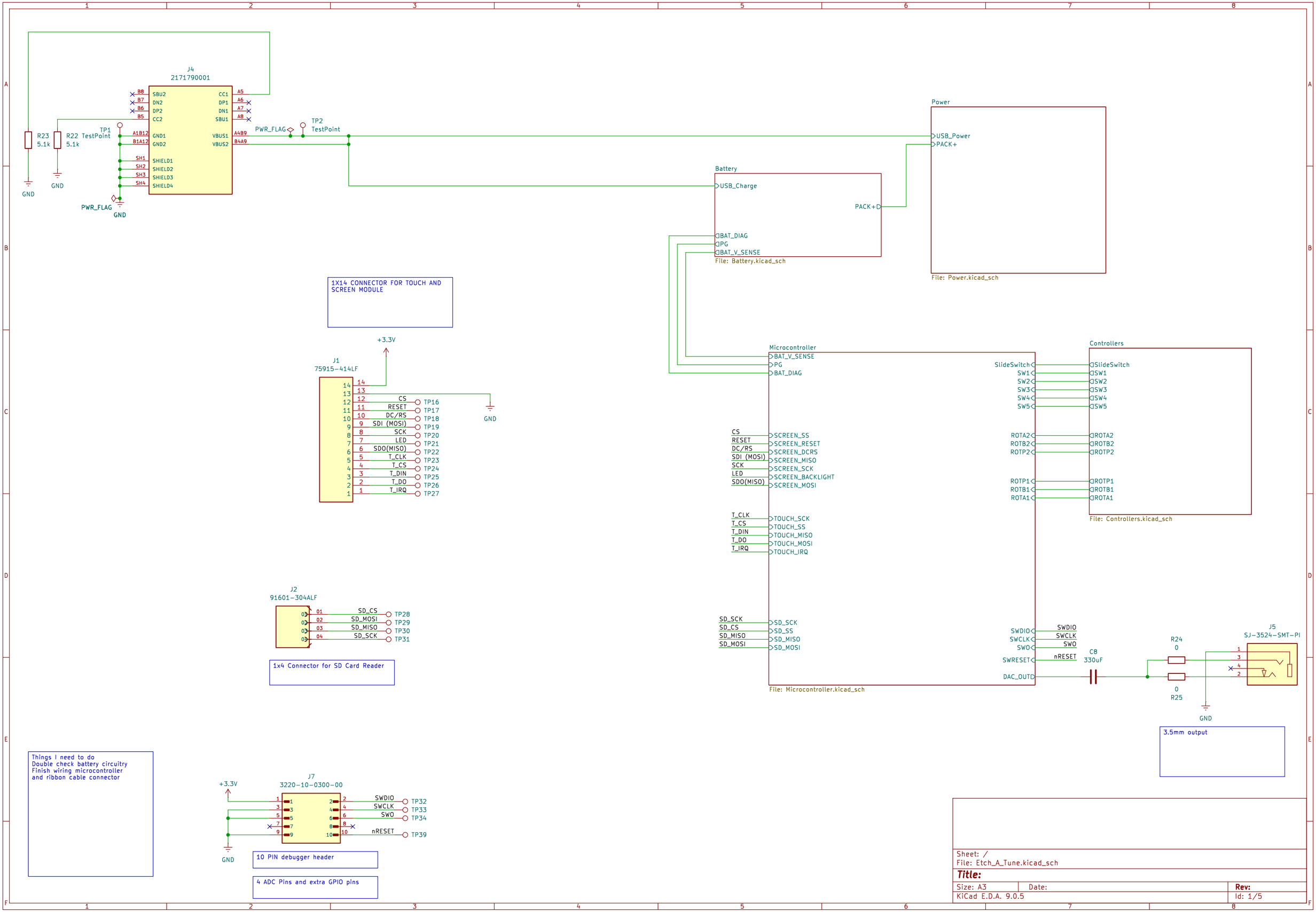
J4
2171790001
SBU2
DN2
DP2
CC2
GND1
GND2
SHIELD1
SHIELD2
SHIELD3
SHIELD4
CC1
DP1
DN1
SBU1
VBUS1
VBUS2
B8
B7
B6
B5
A1B12
B1A12
SH1
SH2
SH3
SH4
A5
A6
A7
A8
A4B9
B4A9
R23
5.1k
R22
5.1k
TP1
TestPoint
GND
PWR_FLAG
TP2
TestPoint
Power
USB_Power
PACK+
File: Power.kicad_sch
Battery
USB_Charge
PACK+
BAT_DIAG
PG
BAT_V_SENSE
File: Battery.kicad_sch
1X14 CONNECTOR FOR TOUCH AND SCREEN MODULE
+3.3V
J1
75915-414LF
CS
RESET
DC/RS
SDI (MOSI)
SCK
LED
SDO(MISO)
T_CLK
T_CS
T_DIN
T_DO
T_IRQ
TP16
TP17
TP18
TP19
TP20
TP21
TP22
TP23
TP24
TP25
TP26
TP27
Microcontroller
BAT_V_SENSE
PG
BAT_DIAG
SCREEN_SS
SCREEN_RESET
SCREEN_DCRS
SCREEN_MISO
SCREEN_SCK
SCREEN_BACKLIGHT
SCREEN_MOSI
TOUCH_SCK
TOUCH_SS
TOUCH_MISO
TOUCH_MOSI
TOUCH_IRQ
SD_SCK
SD_SS
SD_MISO
SD_MOSI
SWDIO
SWCLK
SWO
nRESET
DAC_OUT
File: Microcontroller.kicad_sch
Controllers
SlideSwitch
SW1
SW2
SW3
SW4
SW5
ROTA2
ROTB2
ROTP2
ROTP1
ROTB1
ROTA1
File: Controllers.kicad_sch
J2
91601-304ALF
SD_CS
SD_MOSI
SD_MISO
SD_SCK
TP28
TP29
TP30
TP31
1x4 Connector for SD Card Reader
C8
330uF
R24
0
R25
0
J5
SJ-3524-SMT-PI
3.5mm output
Things I need to do
Double check battery circuitry
Finish wiring microcontroller
and ribbon cable connector
J7
3220-10-0300-00
TP32
TP33
TP34
TP39
10 PIN debugger header
4 ADC Pins and extra GPIO pins
Sheet: /
File: Etch_A_Tune.kicad_sch
Title:
Size: A3
Date:
Rev:
KiCad E.D.A. 9.0.5
Id: 1/5

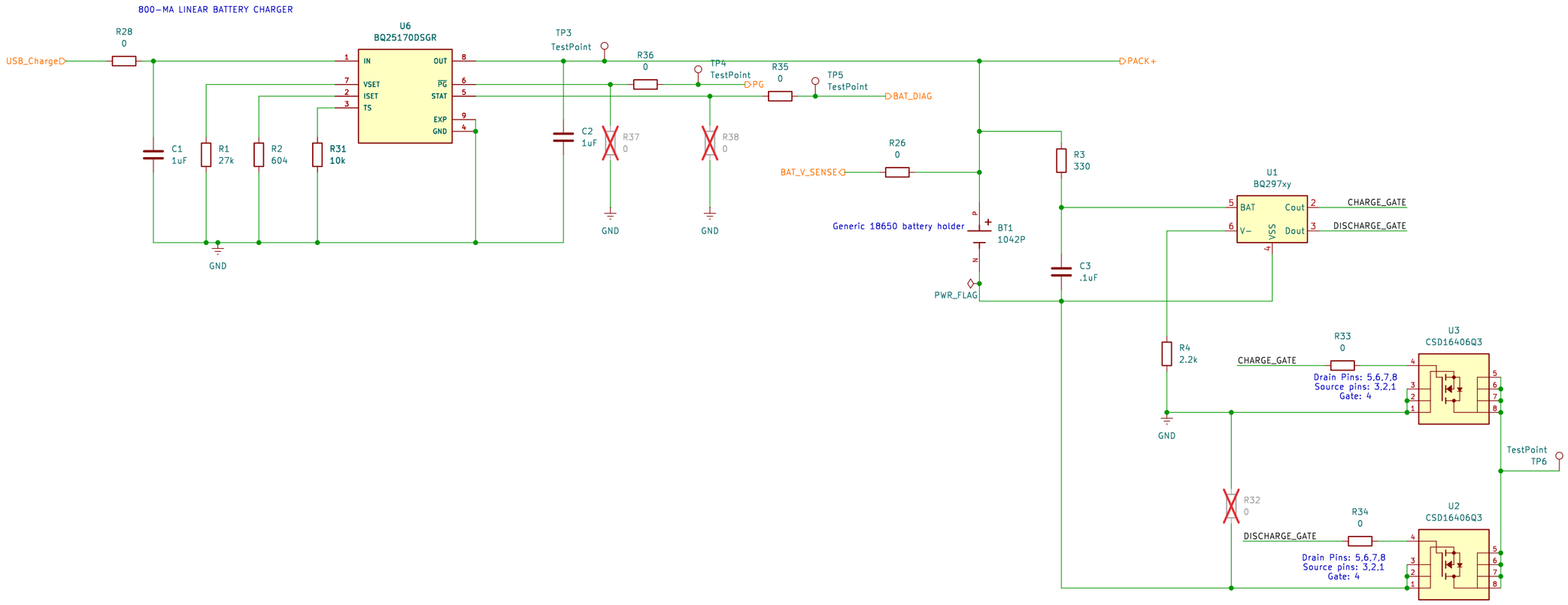

Sheet: /Battery/
File: Battery.kicad_sch

Title: Voltage and Current Protection Integrated Circuit for Single

Size: A3	Date:	Rev:
KiCad E.D.A. 9.0.5		Id: 2/5

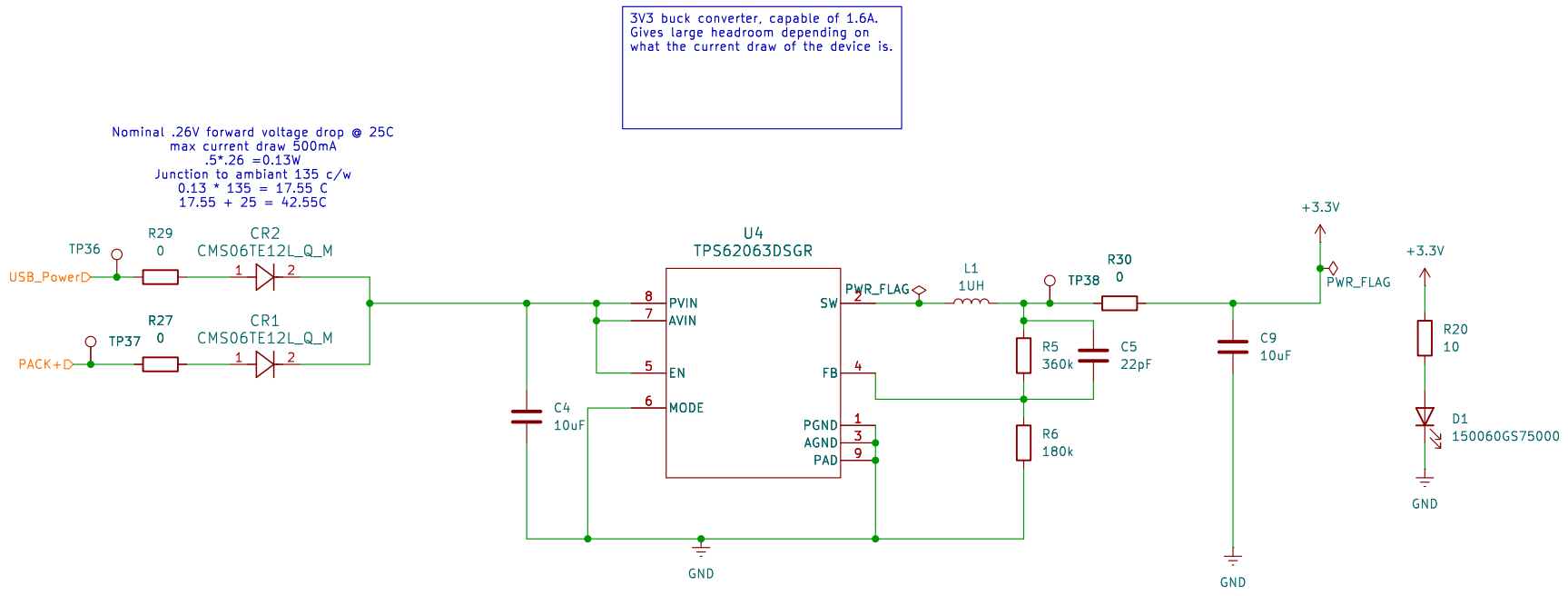

Sheet: /Power/
File: Power.kicad_sch

Title:

Size: A4	Date:	Rev:
KiCad E.D.A. 9.0.5		Id: 3/5

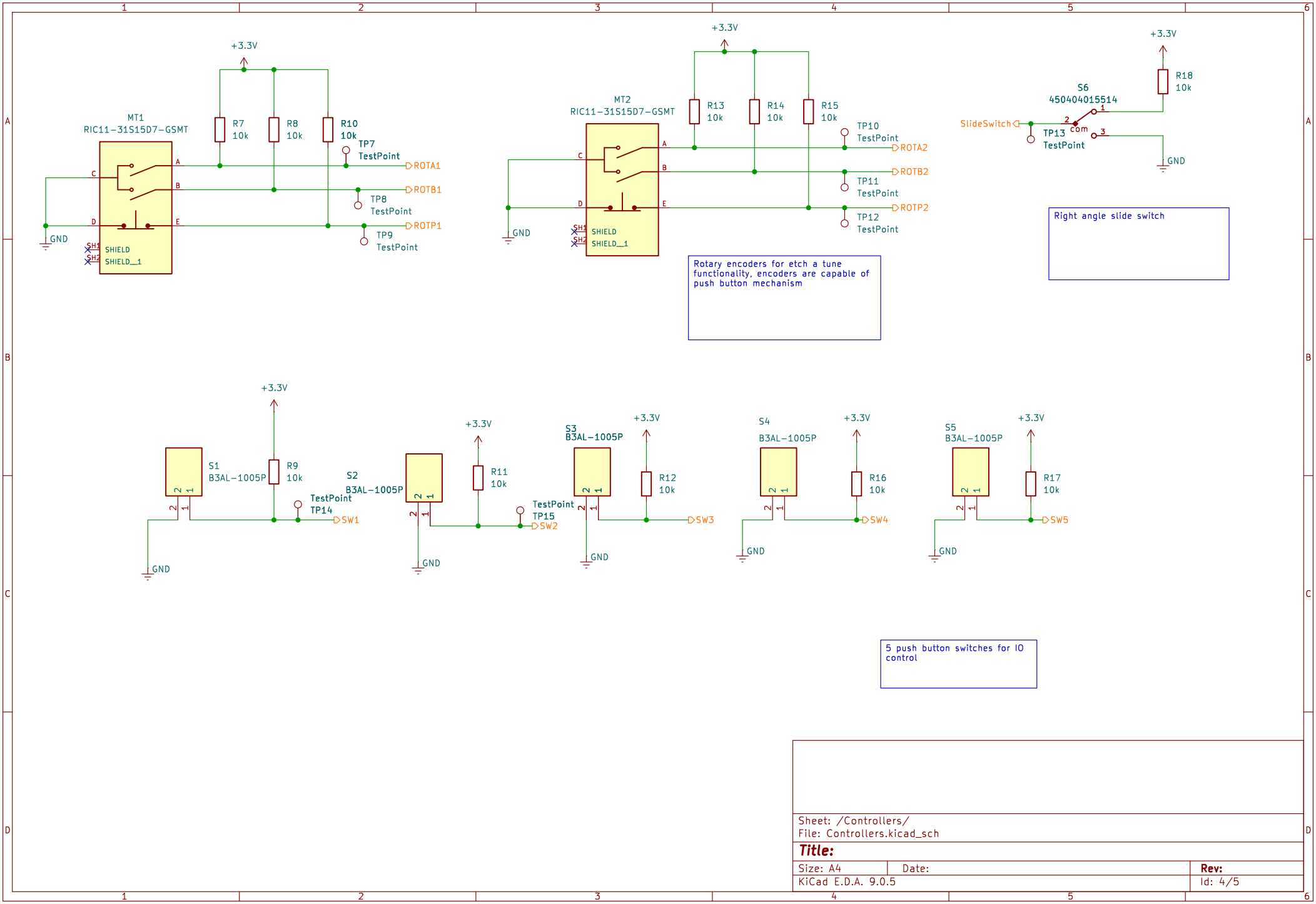

Sheet: /Controllers/
File: Controllers.kicad_sch

Title:

Size: A4	Date:	Rev:
KiCad E.D.A. 9.0.5		Id: 4/5

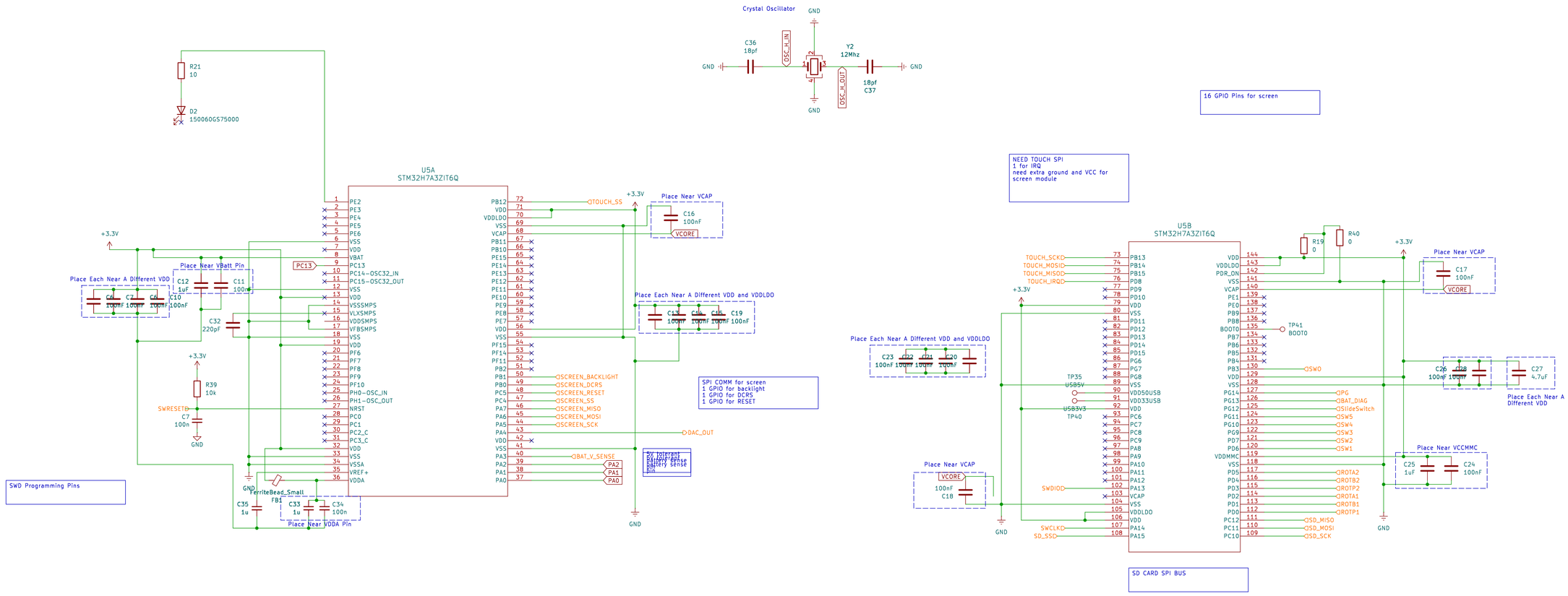

LQFP144	WLCSP139	UFBGA169	UFBGA176+25	LQFP176	TFBGA240+25	LQFP208	TFBGA100	LQFP100	LQFP64	UFBGA144	LQFP144	TFBGA225	Pin name (function after reset)	Pin type	I/O structure	Alternate functions	Additional functions
61	J5	N8	R12	73	R12	-	H6	41	64	P10	74	P10	PE11	I/O	FT_ah2	TIM1_CH2, DFSDM1_CKIN4, SPI4_SS, SAI2_SD_B, OCTOSPIM_P1_NCS, FMC_D8/FMC_DA8, LCD_G3, EVENTOUT	
62	K5	L8	P12	74	L9	-	J6	42	65	R10	75	R10	PE12	I/O	FT_h2	TIM1_CH3N, DFSDM1_DATIN5, SPI4_SCK, SAI2_SCK_B, FMC_D9/FMC_DA9, COMP1_OUT, LCD_B4, EVENTOUT	
63	L5	K8	P13	75	M10	-	K6	43	66	N11	76	R12	PE13	I/O	FT_h2	TIM1_CH3, DFSDM1_CKIN5, SPI4_MISO, SAI2_FS_B, FMC_D10/FMC_DA10, COMP2_OUT, LCD_DE, EVENTOUT	
64	H5	J9	M12	76	N10	-	G7	44	67	P11	77	P11	PE14	I/O	FT_h2	TIM1_CH4, SPI4_MOSI, SAI2_MCK_B, FMC_D11/FMC_DA11, LCD_CLK, EVENTOUT	

Sheet: /Microcontroller/
File: Microcontroller.kicad_sch

Title:

Size: A2	Date:	Rev:
KiCad E.D.A. 9.0.5		Id: 5/5