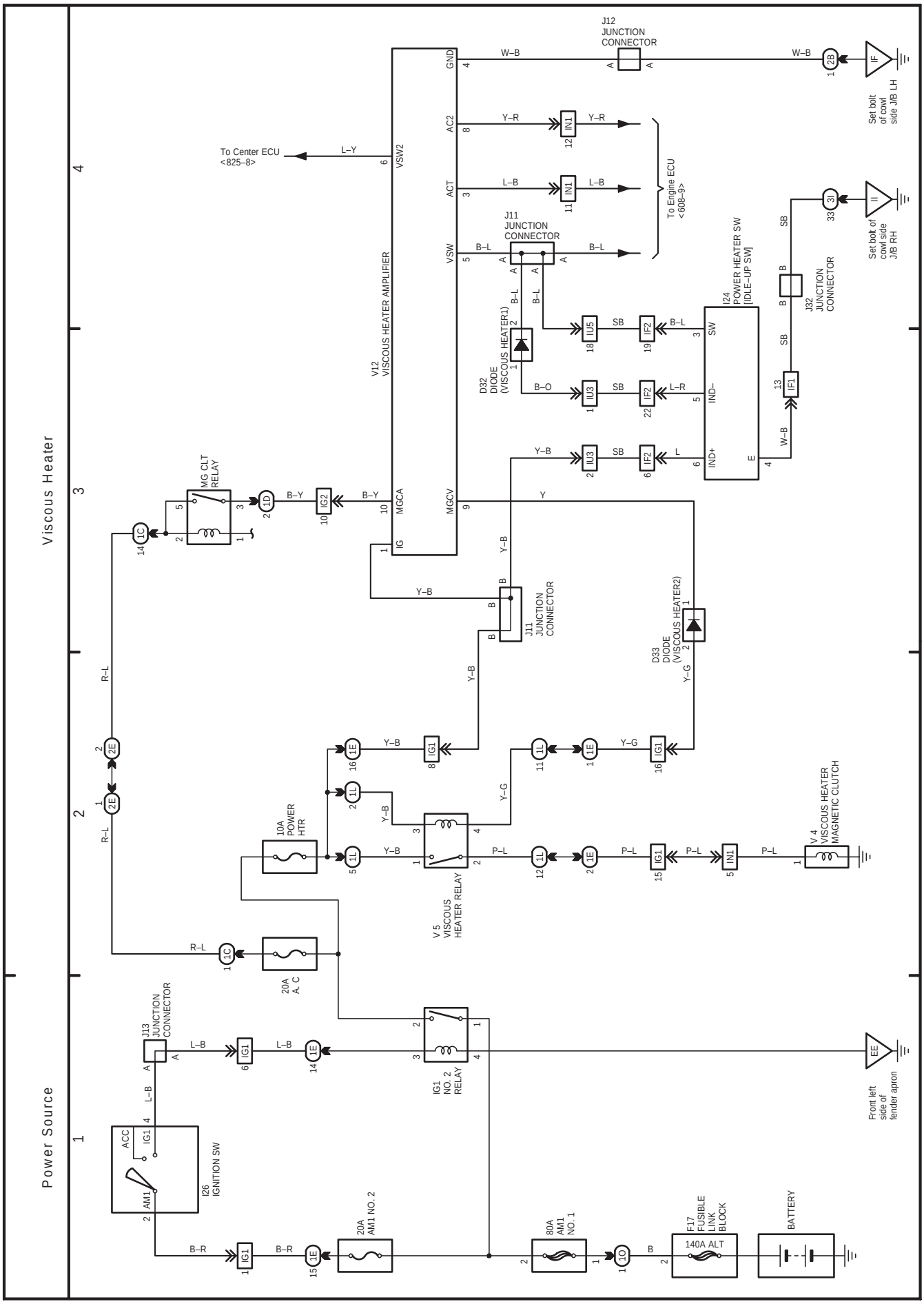
Viscous Heater
Power Source
1
2
3
4
J12 JUNCTION CONNECTOR
W–B
Set bolt of cowl side J/B LH
Y–R
IN1
To Engine ECU <608–9>
L–B
To Center ECU <825–8>
L–Y
VSW2
GND
AC2
ACT
VSW
J11 JUNCTION CONNECTOR
B–L
V12 VISCOUS HEATER AMPLIFIER
MGCA
MGCV
IG
Set bolt of cowl side J/B RH
J32 JUNCTION CONNECTOR
I24 POWER HEATER SW (IDLE–UP SW)
SW
IND–
IND+
E
SB
IU5
IF2
IU3
IF1
D32 DIODE (VISCOUS HEATER1)
B–O
L–R
L
W–B
MG CLT RELAY
B–Y
IG2
Y–B
Y
J11 JUNCTION CONNECTOR
D33 DIODE (VISCOUS HEATER2)
Y–G
R–L
IG1
10A POWER HTR
P–L
V 5 VISCOUS HEATER RELAY
V 4 VISCOUS HEATER MAGNETIC CLUTCH
20A A. C
J13 JUNCTION CONNECTOR
IG1 NO. 2 RELAY
Front left side of fender apron
ACC
AM1
I26 IGNITION SW
B–R
20A AM1 NO. 2
80A AM1 NO. 1
F17 FUSIBLE LINK BLOCK
140A ALT
BATTERY