(Cont. next page)

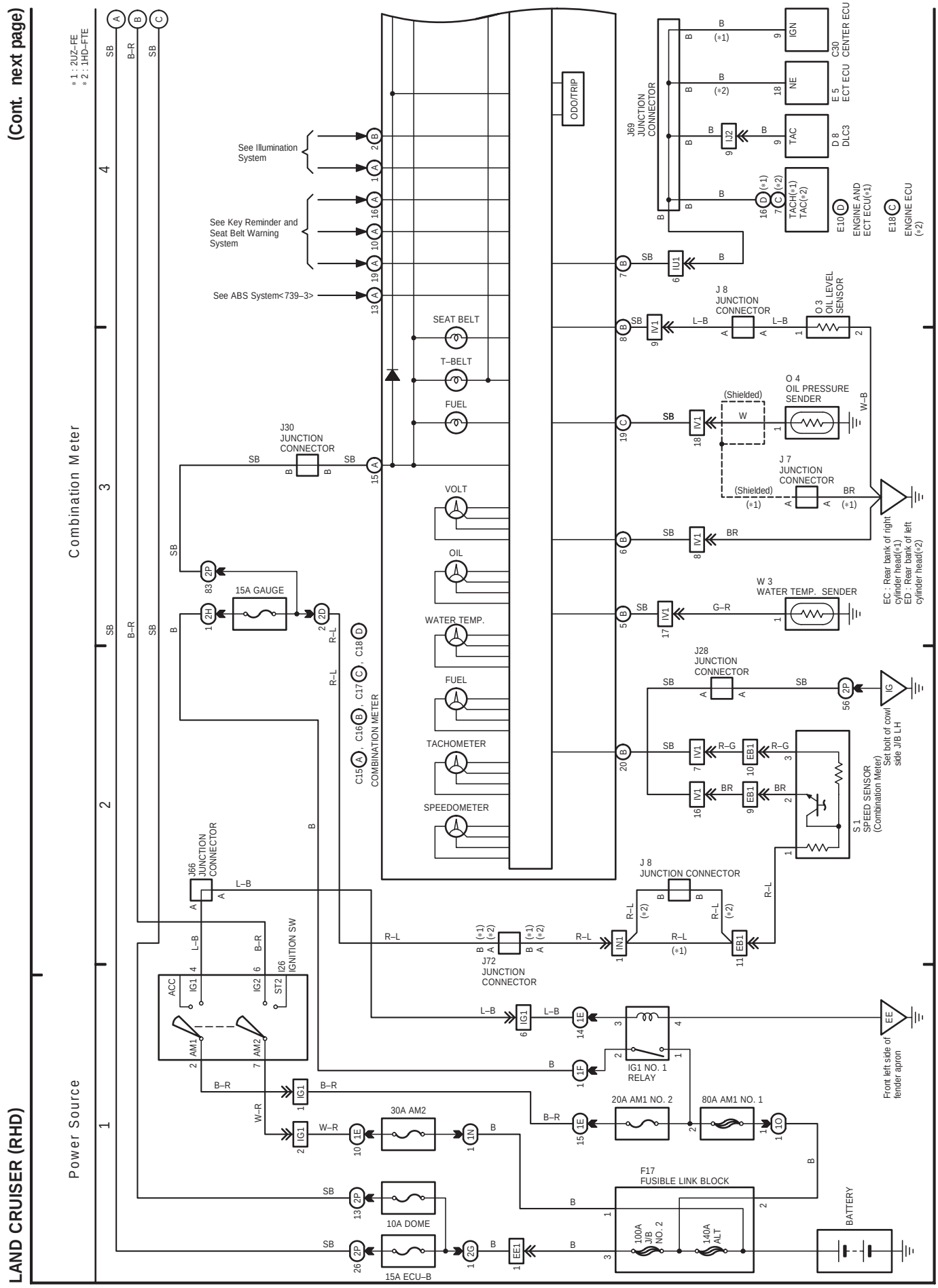

(Cont. next page)

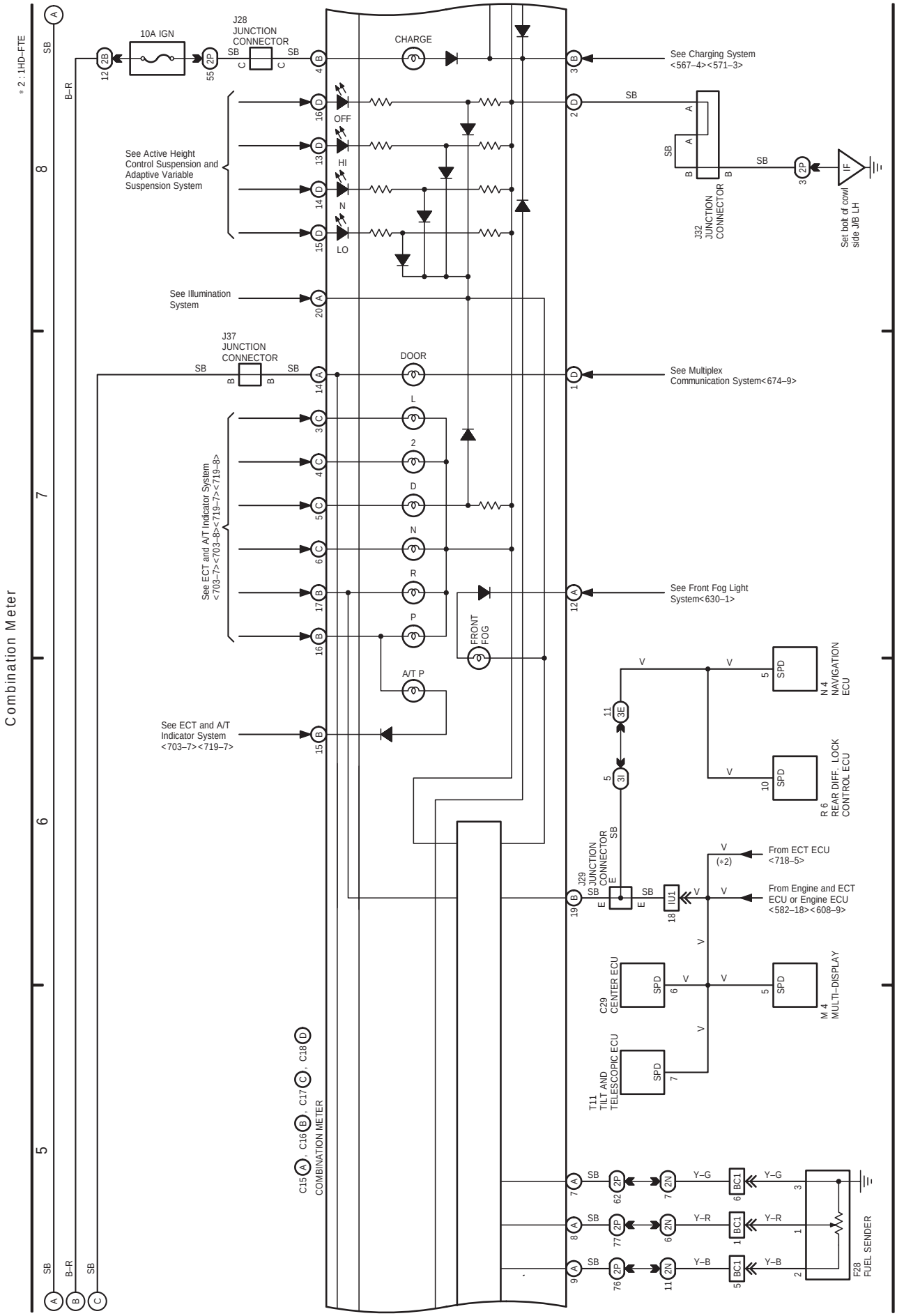

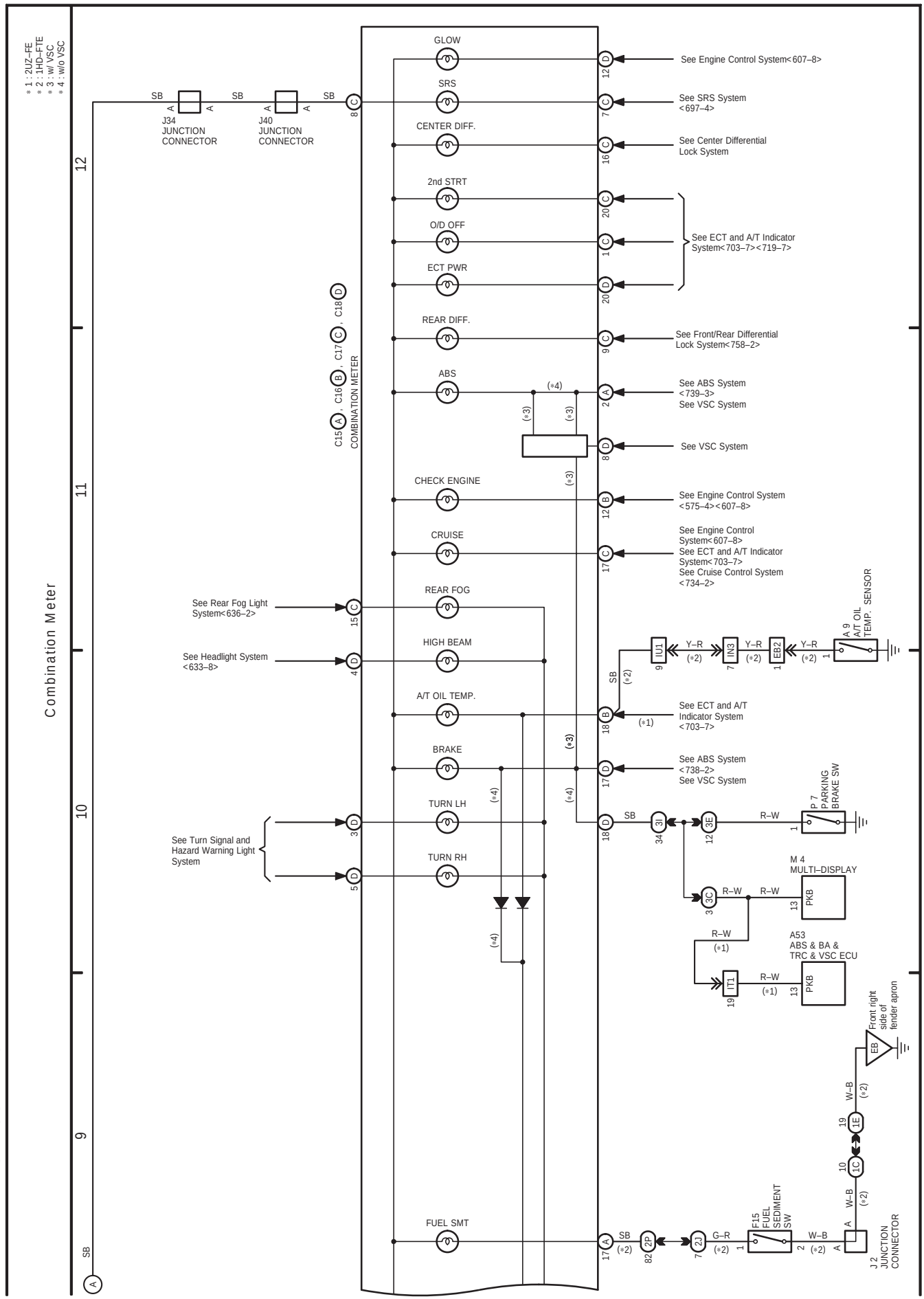
* 1 : 2UZ–FE
* 2 : 1HD–FTE
* 3 : w/ VSC
* 4 : w/o VSC
Combination Meter
J34 JUNCTION CONNECTOR
J40 JUNCTION CONNECTOR
COMBINATION METER
GLOW
SRS
CENTER DIFF.
2nd STRT
O/D OFF
ECT PWR
REAR DIFF.
ABS
CHECK ENGINE
CRUISE
REAR FOG
HIGH BEAM
A/T OIL TEMP.
BRAKE
TURN LH
TURN RH
FUEL SMT
See Engine Control System<607–8>
See SRS System <697–4>
See Center Differential Lock System
See ECT and A/T Indicator System<703–7><719–7>
See Front/Rear Differential Lock System<758–2>
See ABS System <739–3>
See VSC System
See VSC System
See Engine Control System <575–4><607–8>
See Engine Control System<607–8>
See ECT and A/T Indicator System<703–7>
See Cruise Control System <734–2>
See Rear Fog Light System<636–2>
See Headlight System <633–8>
See ECT and A/T Indicator System <703–7>
See ABS System <738–2>
See VSC System
See Turn Signal and Hazard Warning Light System
A 9 A/T OIL TEMP. SENSOR
P 7 PARKING BRAKE SW
M 4 MULTI–DISPLAY
A53 ABS & BA & TRC & VSC ECU
F15 FUEL SEDIMENT SW
J 2 JUNCTION CONNECTOR
Front right side of fender apron