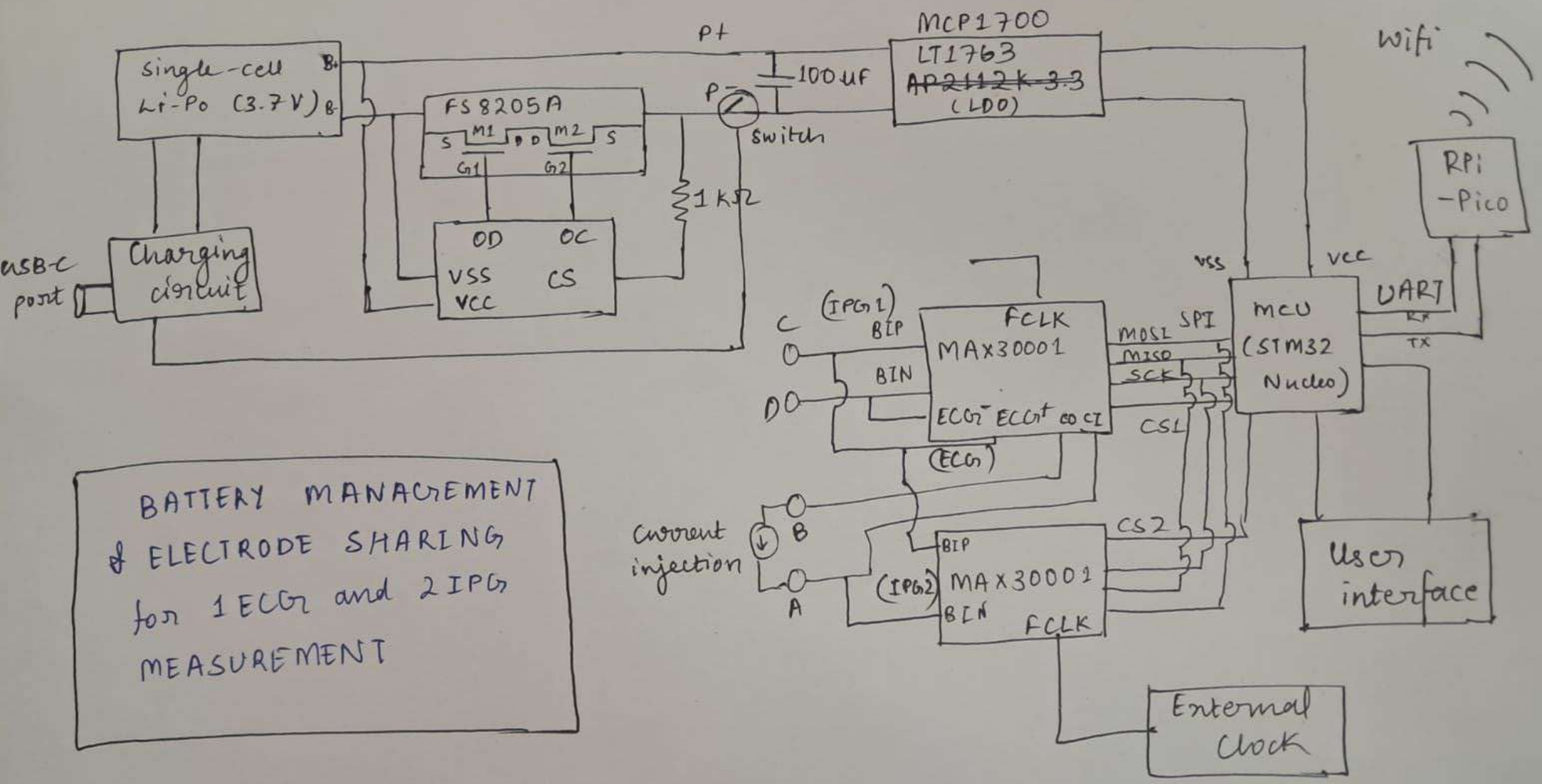
single-cell Li-Po (3.7V)
B+
B-
FS8205A
S
M1
D
M2
S
G1
G2
OD
OC
VSS
CS
VCC
1 KΩ
P+
P-
switch
100 uF
MCP1700
LT1763
~~AP2112K-3.3~~
(LDO)
wifi
RPi -Pico
USB-C port
Charging circuit
VSS
VCC
UART
RX
TX
MCU (STM32 Nucleo)
SPI
MOSI
MISO
SCK
CS1
CS2
C
(IPG1)
BIP
BIN
FCLK
MAX30001
ECG- ECG+ CO CI
(ECG)
D
B
A
Current injection
(IPG2)
BIP
BIN
MAX30001
FCLK
User interface
External Clock
BATTERY MANAGEMENT & ELECTRODE SHARING for 1 ECG and 2 IPG MEASUREMENT

Three Design Configurations

① 4 electrodes : 1 ECG & 3 IPG

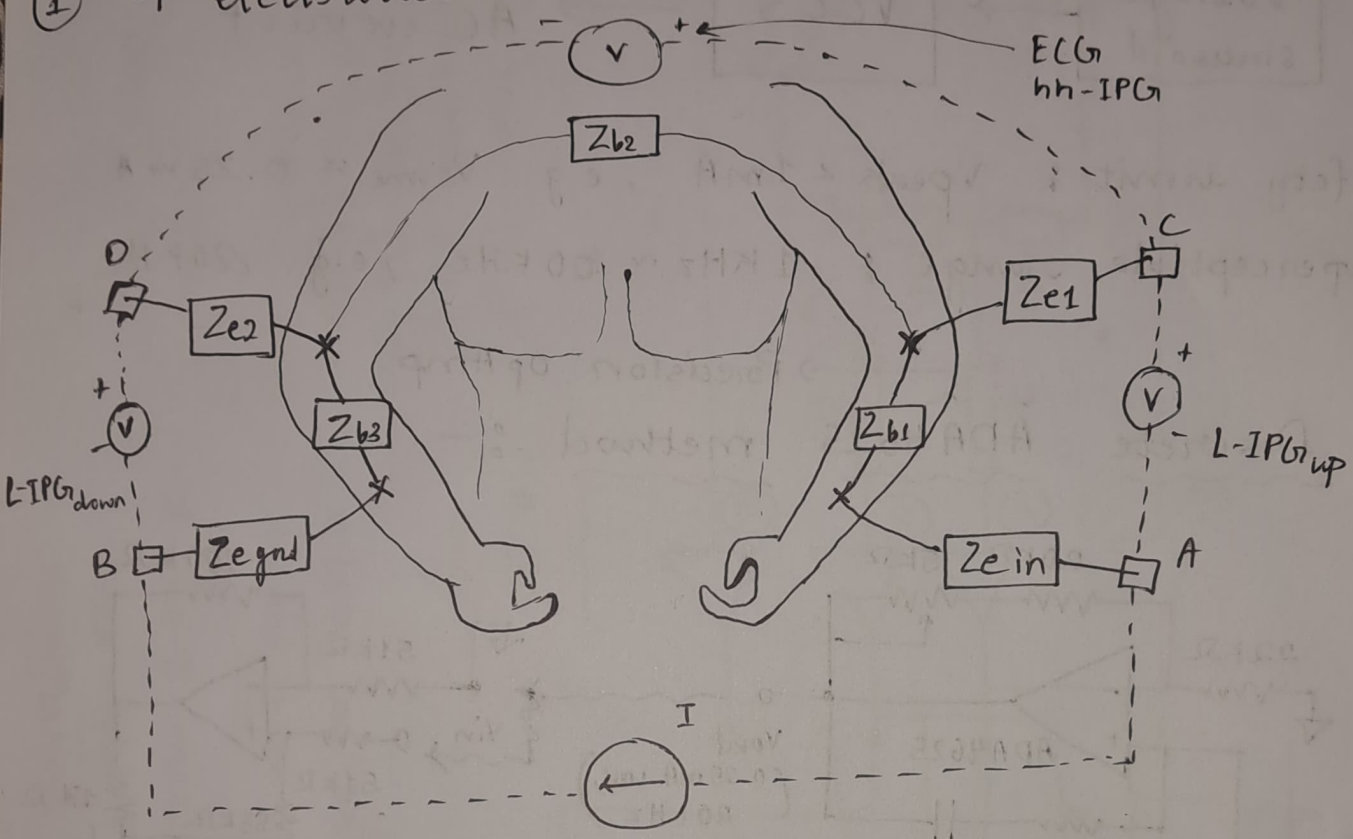

5 main circuits :-

① Current Injection

② ECG

③ hh-IPG

④ L-IPG down

⑤ L-IPG up

Using just 4 dry electrodes

Current Injection

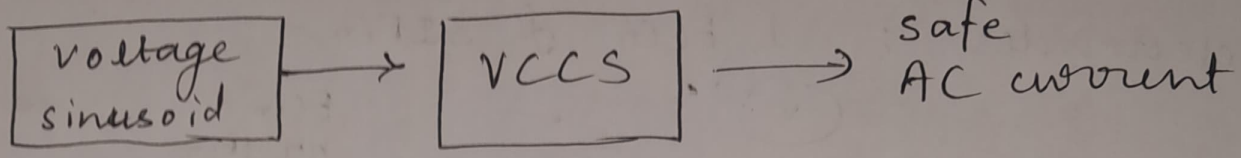

Safety limit : $V_{peak} < 1mA$, e.g. $V_{rms} \approx 0.25\,mA$

Imperceptible range : 1 KHz ~ 100 KHz , e.g. 20 KHz

① Discrete ADA4625 method :-

ADA4625 → Precision OpAmp

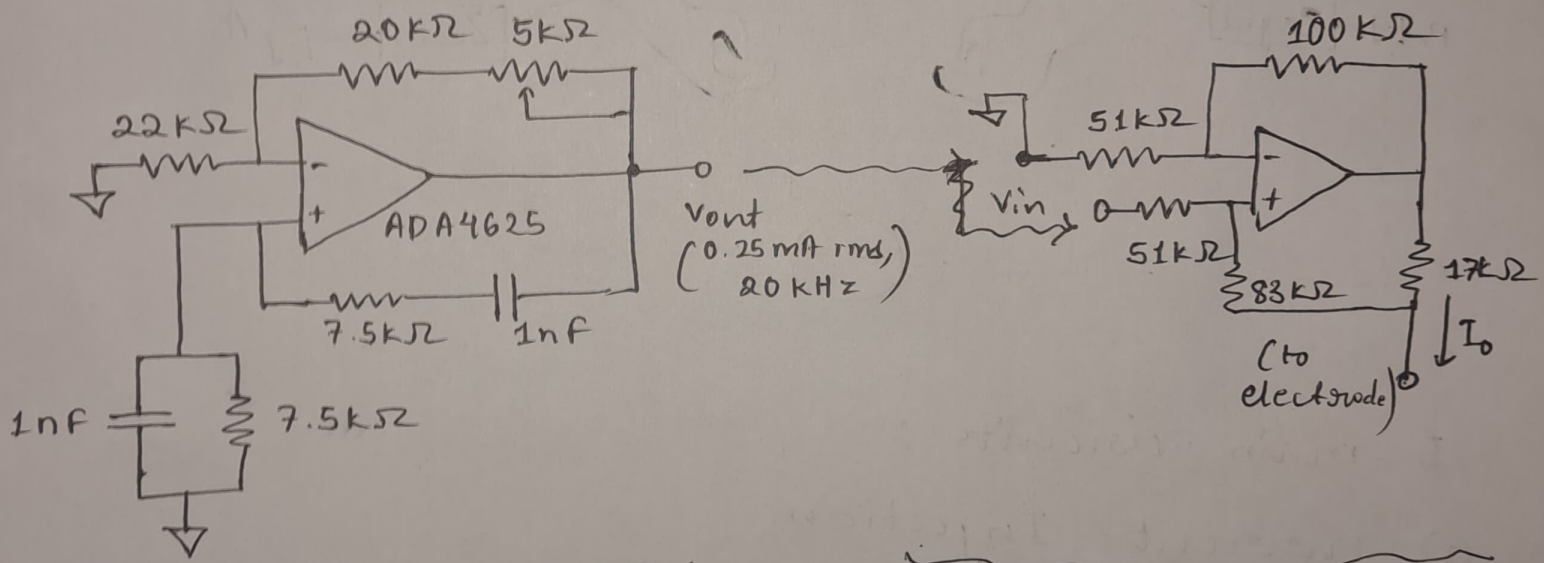

Wien-Bridge oscillator

Howland current pump

② Pre-built chip method :-

DDS (Discrete Digital synthesis) waveform gene.

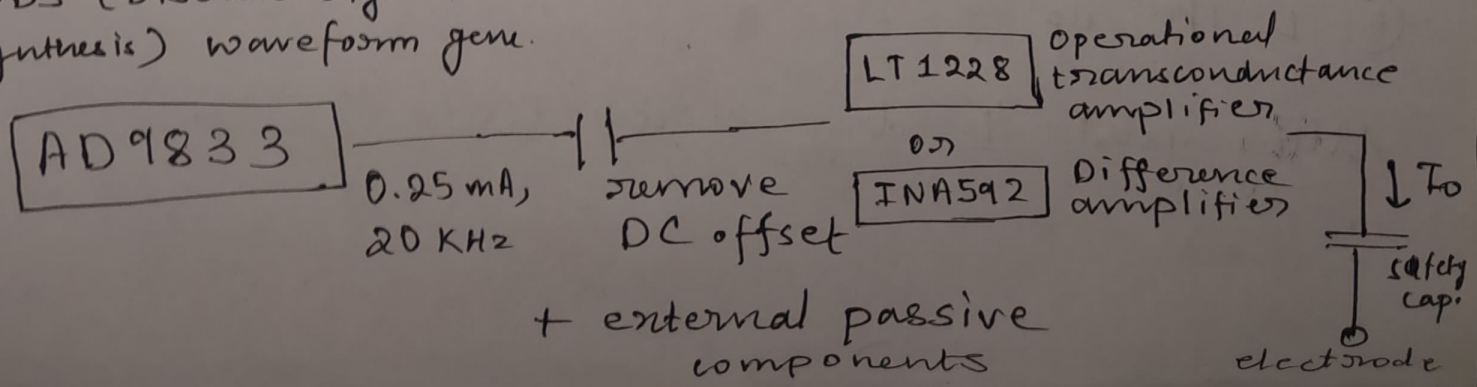

+ external passive components

High-level circuit overview (4 electrodes : 1 ECG & 3 IPG)

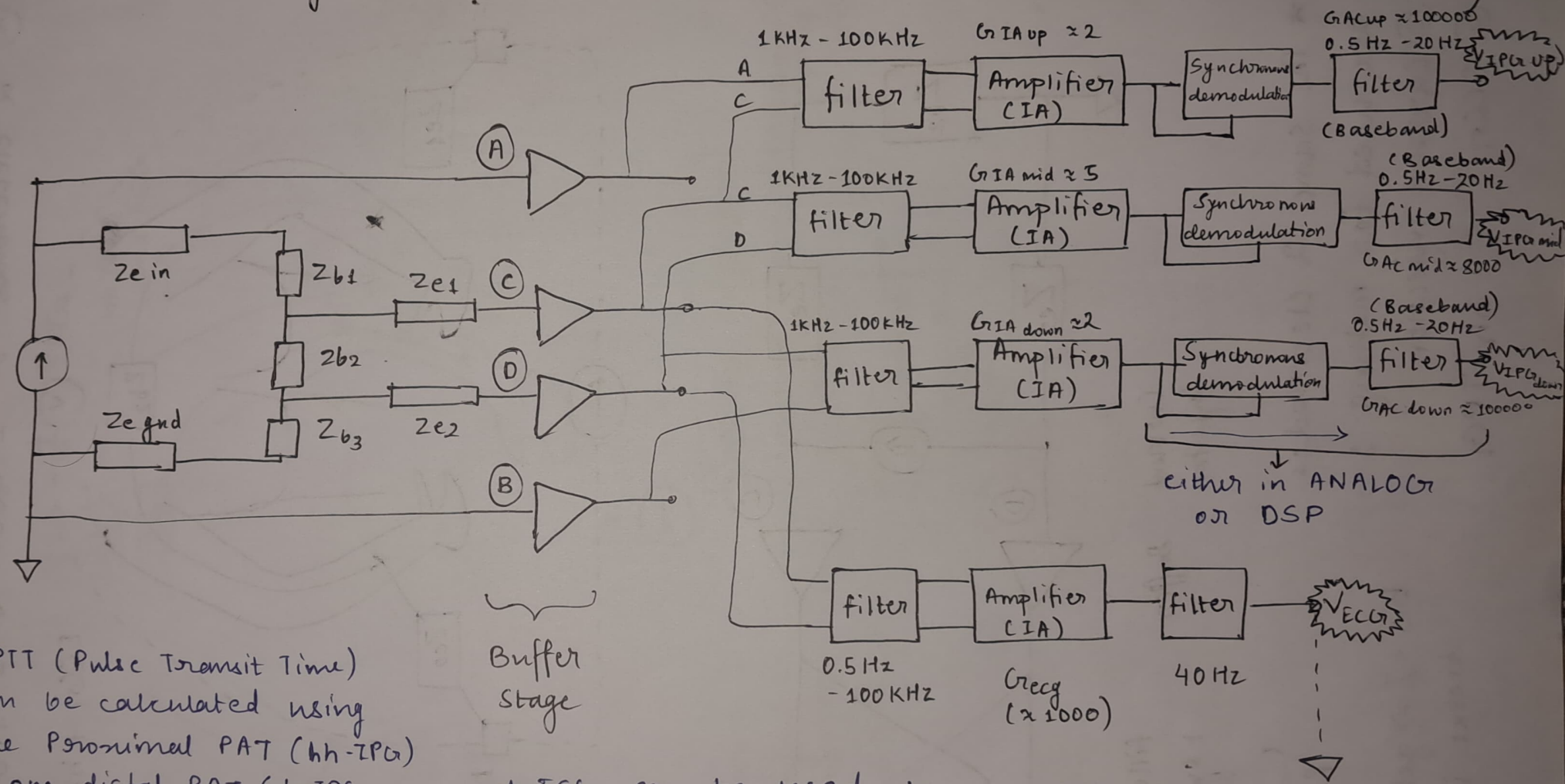

★ PTT (Pulse Transit Time) can be calculated using one Proximal PAT (hh-IPG) & one distal PAT (L-IPG - either up or down)

↳ to obtain arterial stiffness and cuffless blood pressure

★ ECG can be used to measure heart-beat rate and check normal heart functioning

★ Bio-Z measurements can also help us get an idea about health parameters such as respiration cycle, blood volume, etc.

② 2 electrodes : 1 ECG & 1 IPG

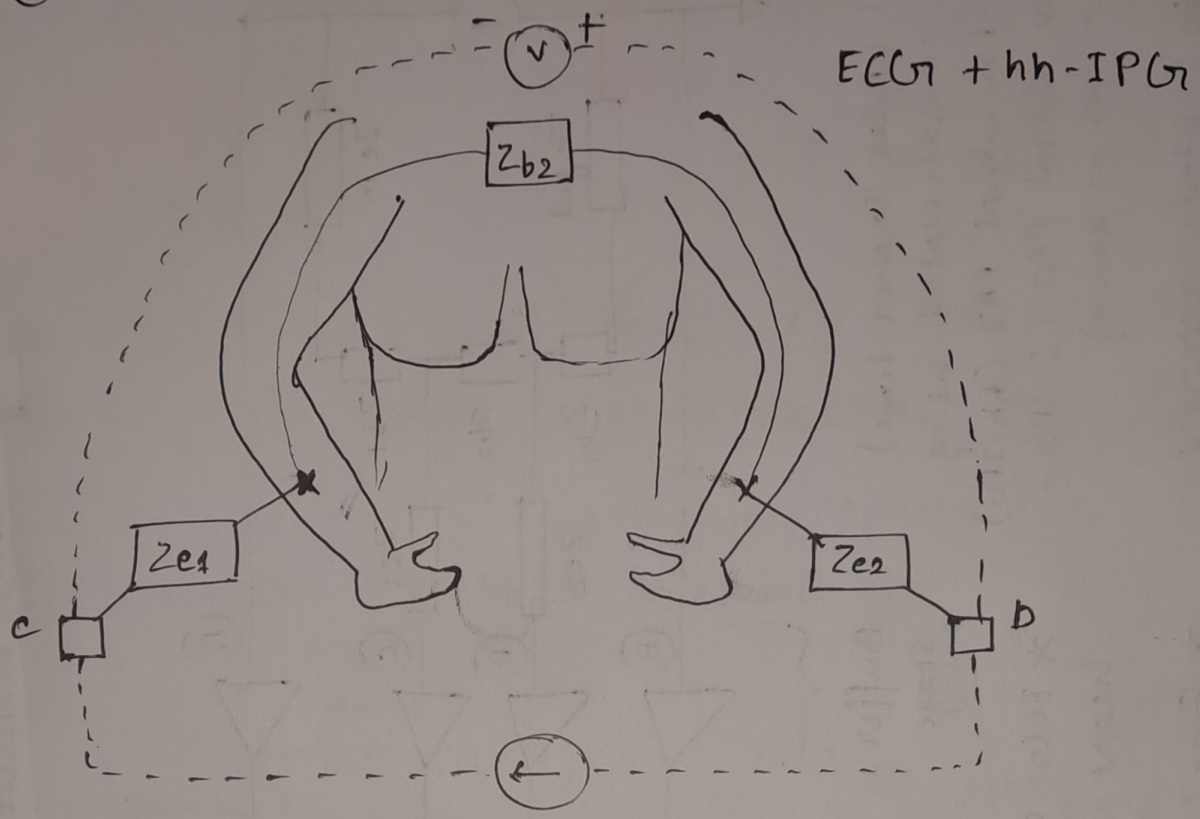

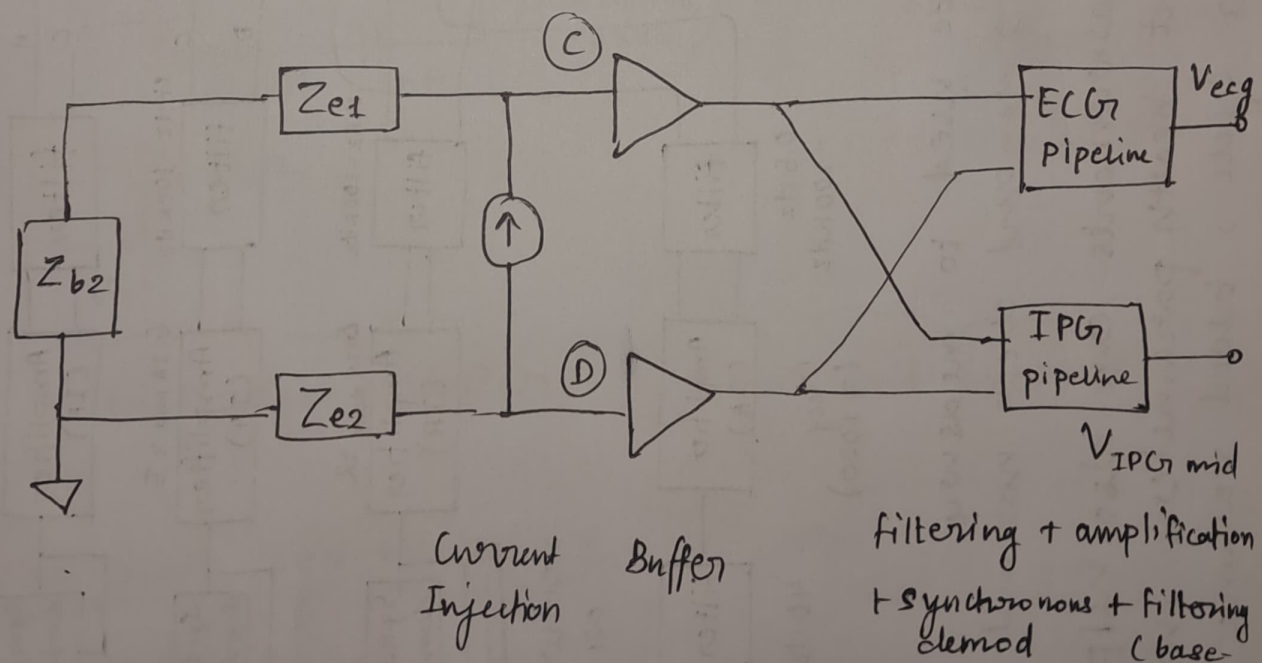

★ The same 2 electrodes are used for making :-

① current injection

② ECG ③ hh-IPG

Bio-Z ⇒ get the tissue impedance

③ 4 electrodes : 1 ECG & 1 IPG

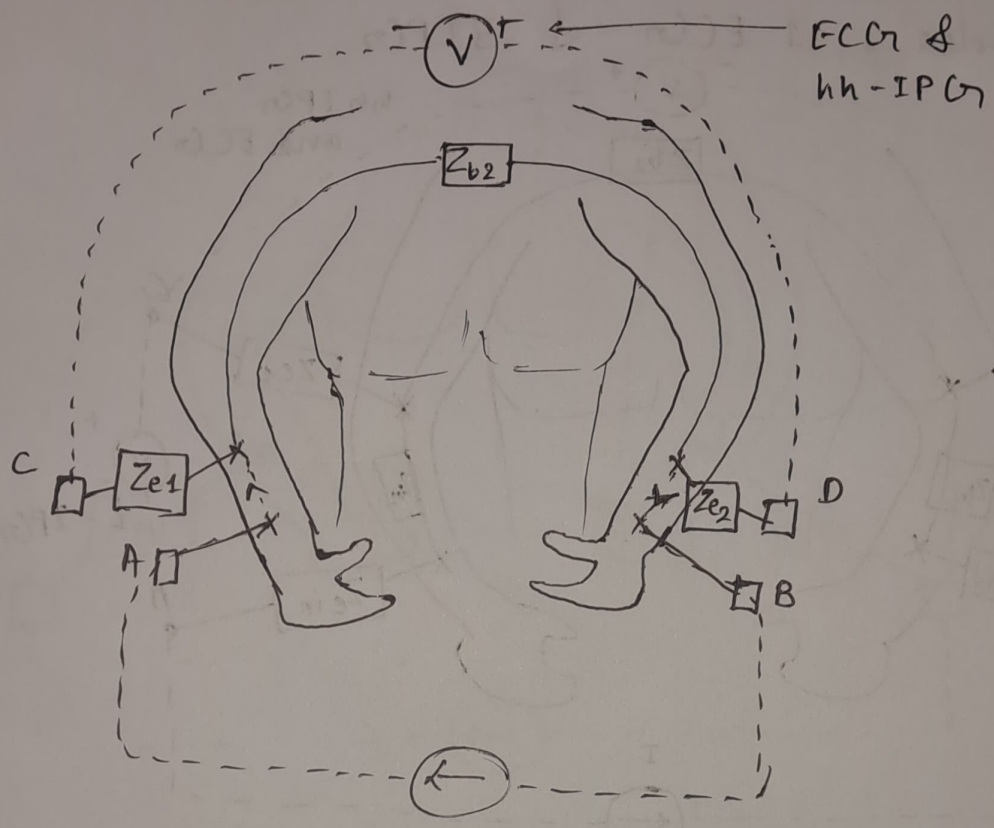

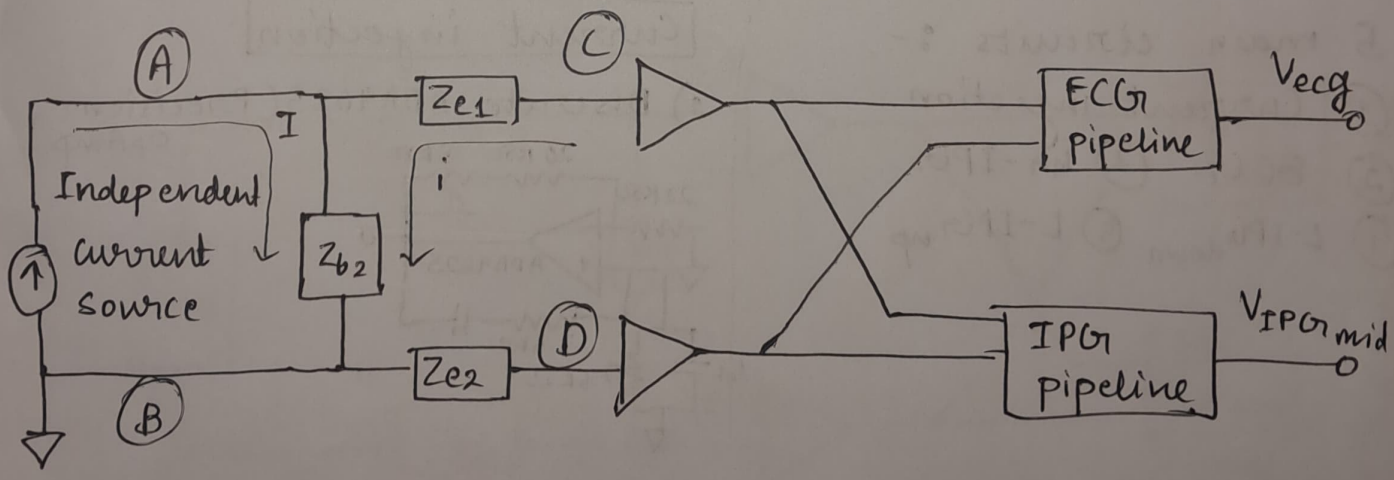

Buffer

filtering + amplification + synchronous demod + filtering (baseband)

Processing

★ In such a measurement we ensure that the current 'i' is very small. This makes the voltage drop across Z_{ei} (electrode impedance) almost zero and measurement of Z_{b2} (tissue impedance becomes independent of it)

★ Z_{ei} are usually high & variable. Their value can change with sweat, pressure, movement etc, making the reading noisy.

Close-up view of the signal-processing pipeline

Block A: Buffering and filtering stage (also includes amplification)

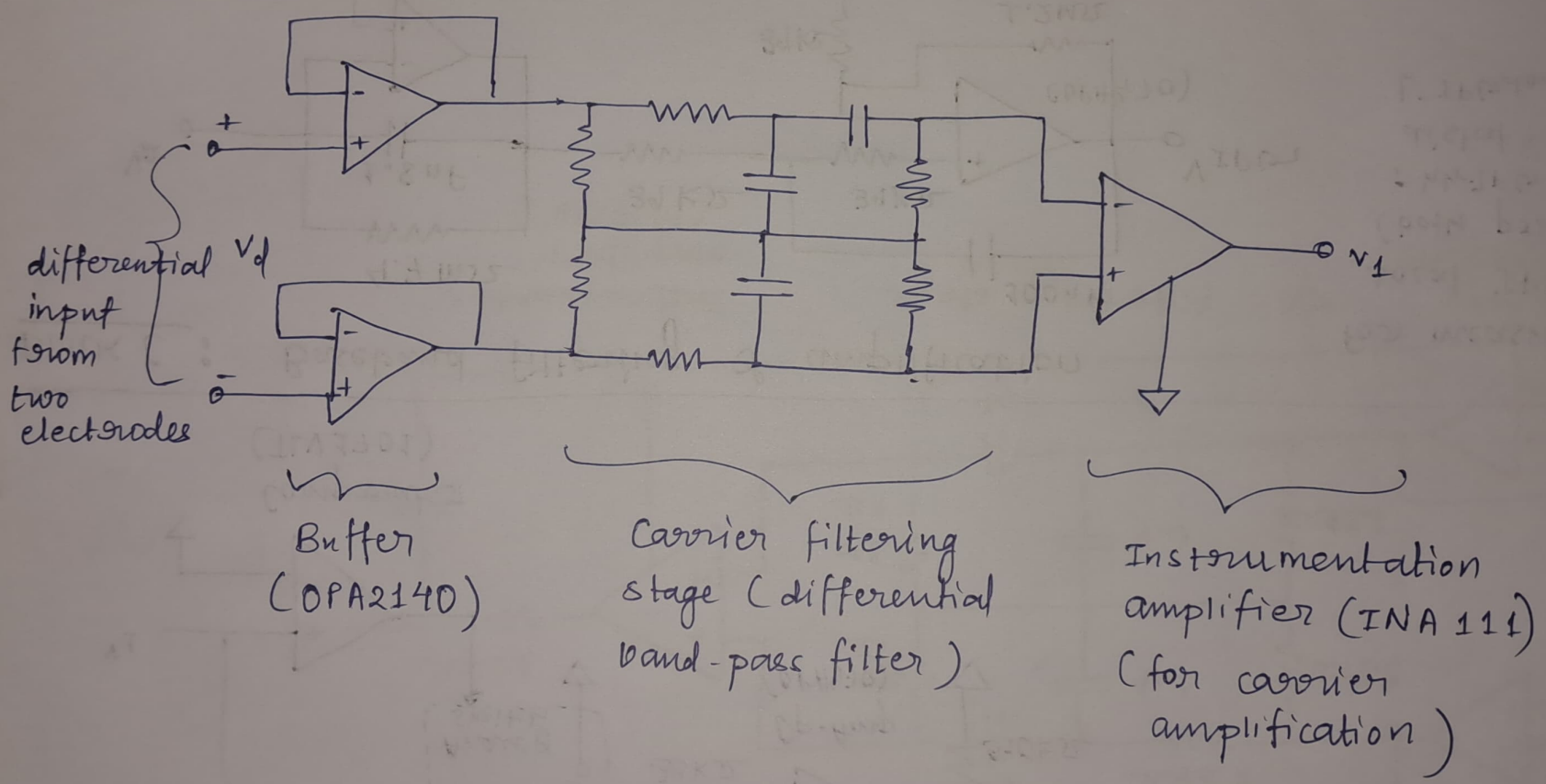

Block B : Synchronous Demodulation stage

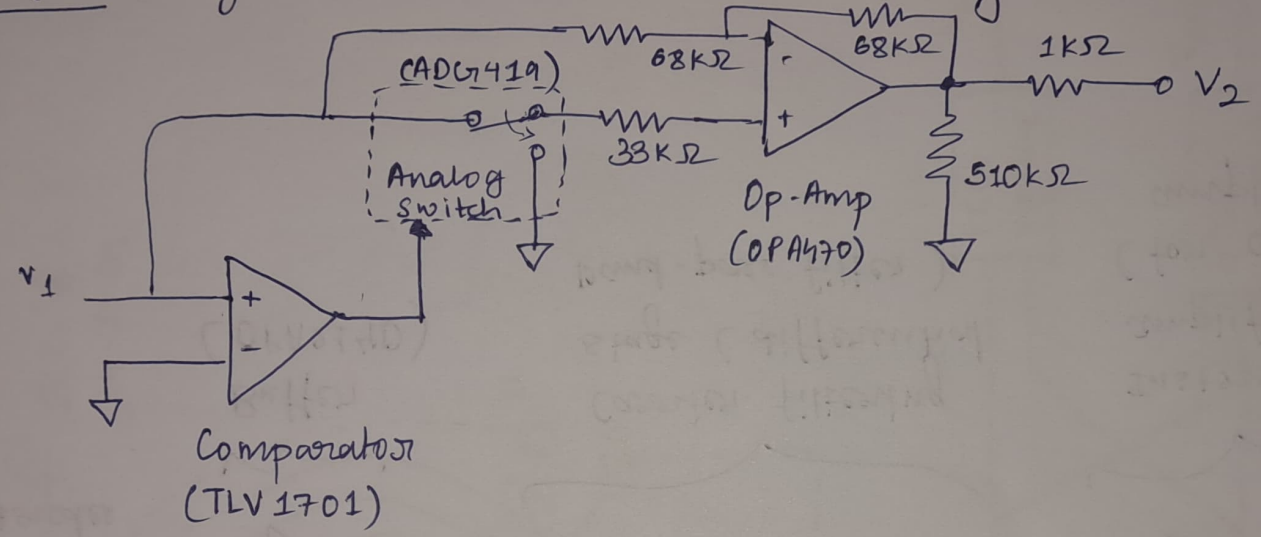

Block C : Baseband filtering & amplification

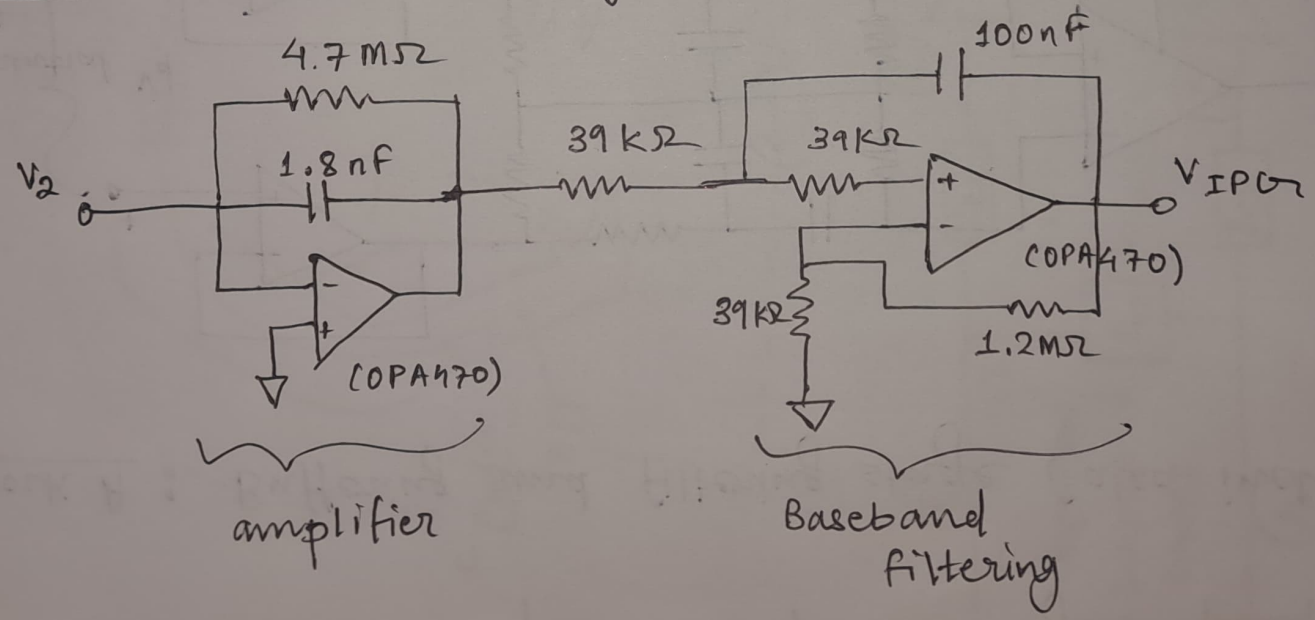

For measuring local IPG (both proximal : hh-IPG & distal : L-IPGup, L-IPGdown)
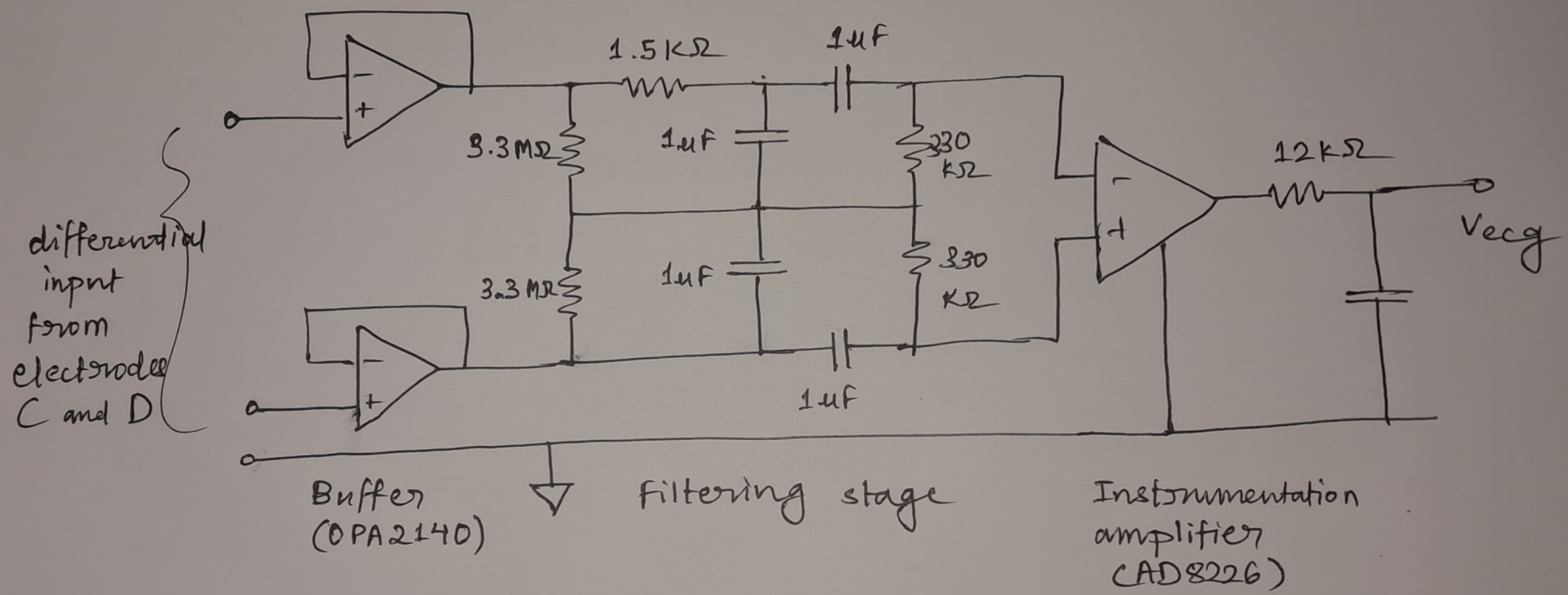
ECG circuit schematic : (Synchronous demodulation not required)