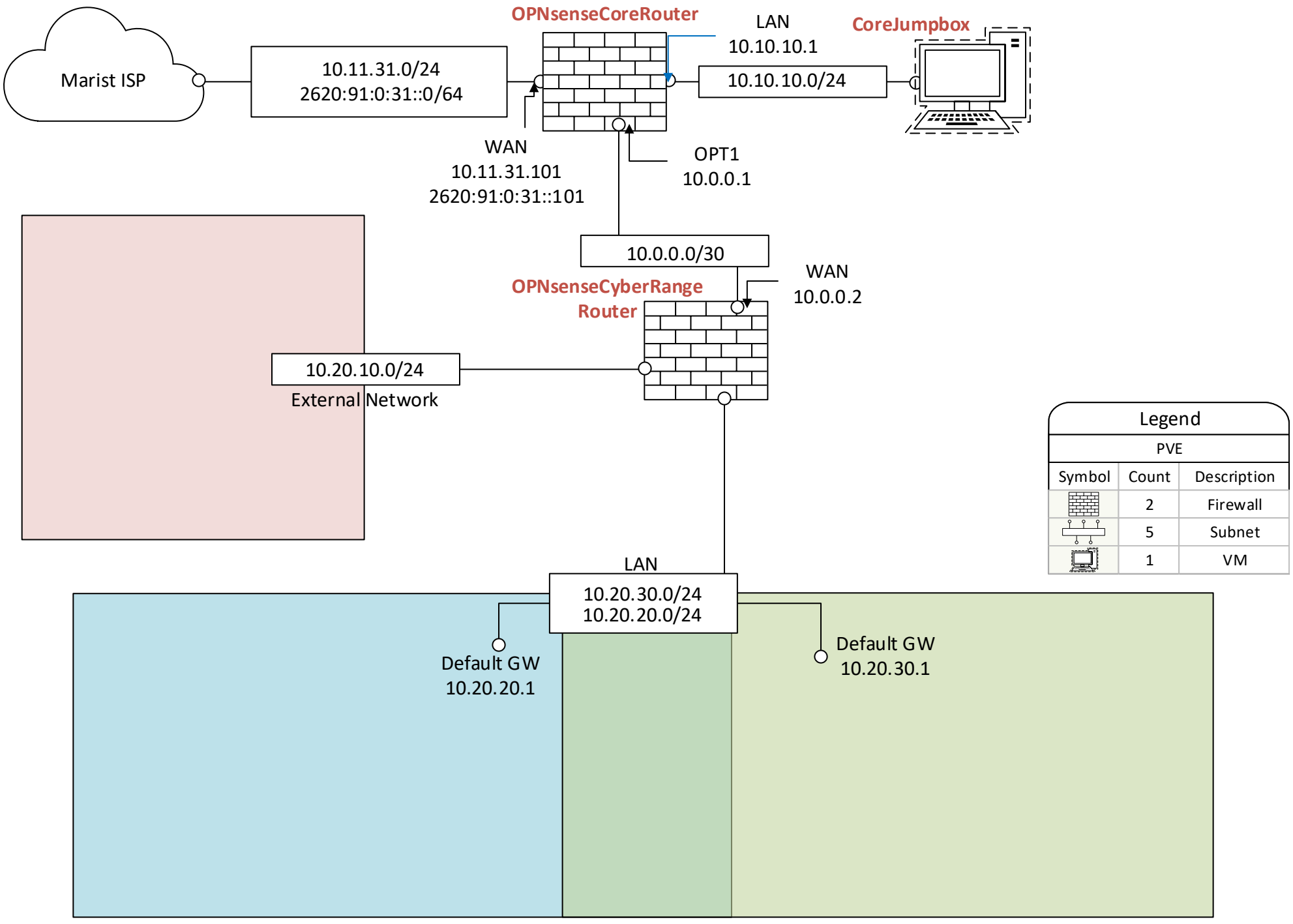

PVE explained

Windows Keys

CBYNT-XW78G-8BPTQ-KBJFM-RC4QM for windows server 2022
WQJNJ-CXMKP-P2D8G-BG43H-CYT4V for windows 11 education N
WQJNJ-CXMKP-P2D8G-BG43H-CYT4V for windows 10 education N
same keys work for both win11 and win10

Network Linux Bridges

vmbr1 RedTeam adapter for VMs
vmbr2 Target adapter for VMs
vmbr3 SOC adapter for VMs
all subnets setup with DHCP with default range
x.x.x.100 - x.x.x.200
addresss' outside that range are acceptable for static IP
assingment use

templates do not have network adapters attached. After
cloning VM from template add network adapter. Always
selected linked clone unless you need to resize clone
(increase disk space) select full clone. familarize yourself
with the templates