Platform Connectors

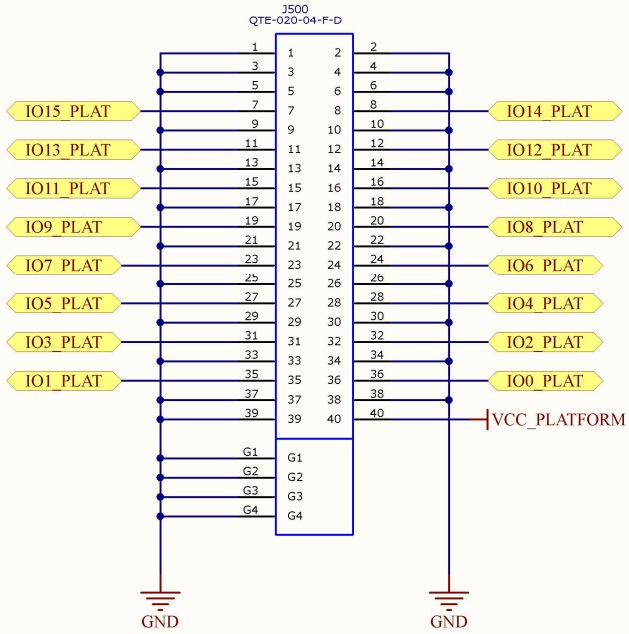

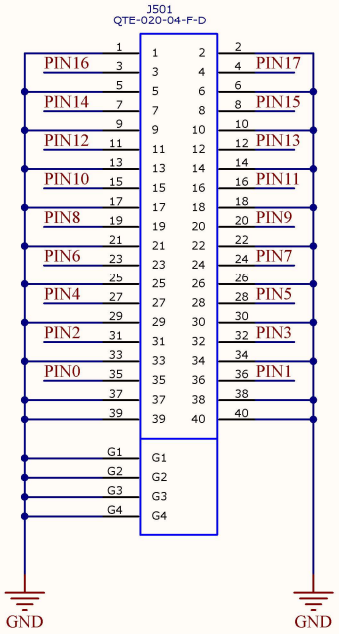

DUT Connectors

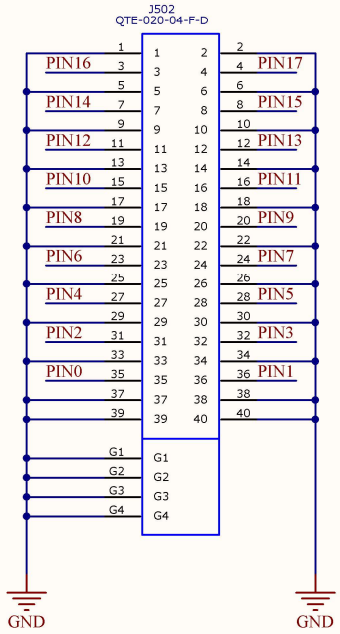

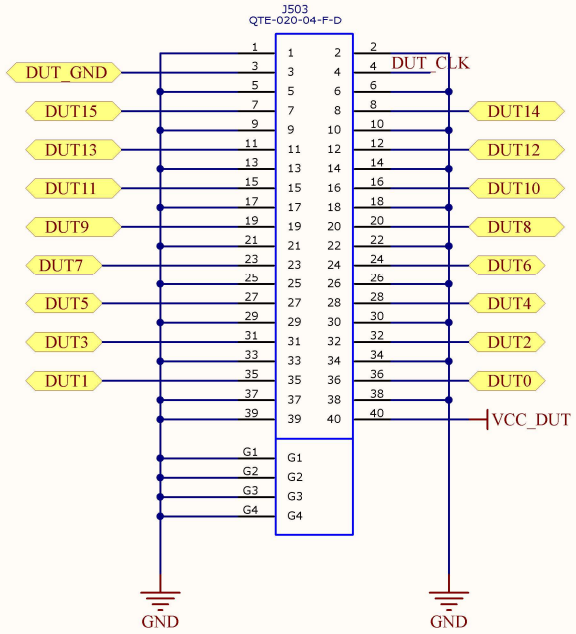

External Clock Source for DUT

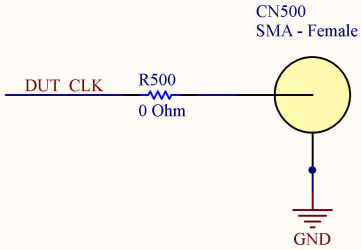

Title: *		
Size: A4	Revision: *	
Date: 10/09/2018	Sheet * of *	
Drawn by: *		
Approved by: *		

Ledger