REAL-TIME ENVIRONMENTAL MONITORING USING ESP32 & MQTT

PROBLEM STATEMENT

Poor indoor environmental conditions such as high temperature, humidity, and gas concentration can negatively impact health, safety, and comfort. Traditional monitoring systems lack real-time visibility, remote access, and automatic alerts, making early detection difficult.

OBJECTIVE

- Monitor temperature, humidity, and gas concentration in real time
- Transmit sensor data using MQTT protocol
- Visualize data through a cloud-based dashboard (ThingsBoard)
- Implement threshold-based safety status detection
- Build a working IoT prototype using ESP32

CLOUD & DATA PIPELINE ARCHITECTURE

Platform: ThingsBoard Cloud
Protocol: MQTT
Topic: v1/devices/me/telemetry
Flow:
ESP32 → MQTT Broker → ThingsBoard → Dashboard Widgets → Alerts

SYSTEM ARCHITECTURE

Description:
Sensors collect environmental data → ESP32 processes readings → MQTT sends data → Cloud dashboard displays analytics → Safety status is determined.

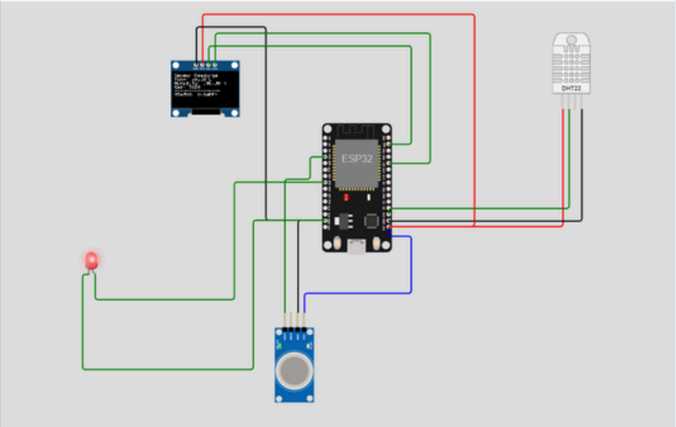

HARDWARE & SENSOR CONFIGURATION

Component	Purpose
ESP32	Microcontroller
DHT22	Temperature & Humidity sensing
MQ Gas Sensor	Gas concentration detection
OLED Display	Local real-time data display
LED	Visual safety alert
Jumper Wires	Circuit connections

DATA FLOW & SAMPLE LOGS

MQTT Message Format (JSON):

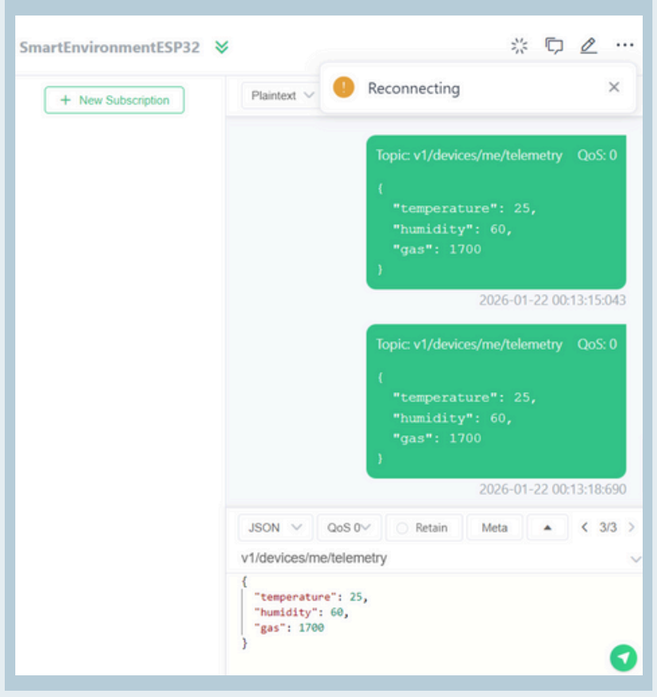

ANALYTICS & DECISION LOGIC

Threshold-Based Logic:

- Gas > 3000 → ❌ UNSAFE
- Temperature > 40°C → ⚠ WARNING
- Humidity > 70% → ⚠ WARNING
- Else → ✅ SAFE

Dashboard Widgets:

- Time-series chart (Temperature)
- Gauge (Gas level)
- Numeric cards (Humidity)
- Status indicator (SAFE / UNSAFE)

SECURITY & PRIVACY CONSIDERATIONS

- Device authentication via access token
- Secure MQTT communication
- No personal data collected
- Cloud access restricted to authorized users

PHOTOS OF WORKING PROTOTYPE

- **ESP32 wiring diagram**
- **Physical sensor setup**
- **OLED live readings**
- **LED alert status**

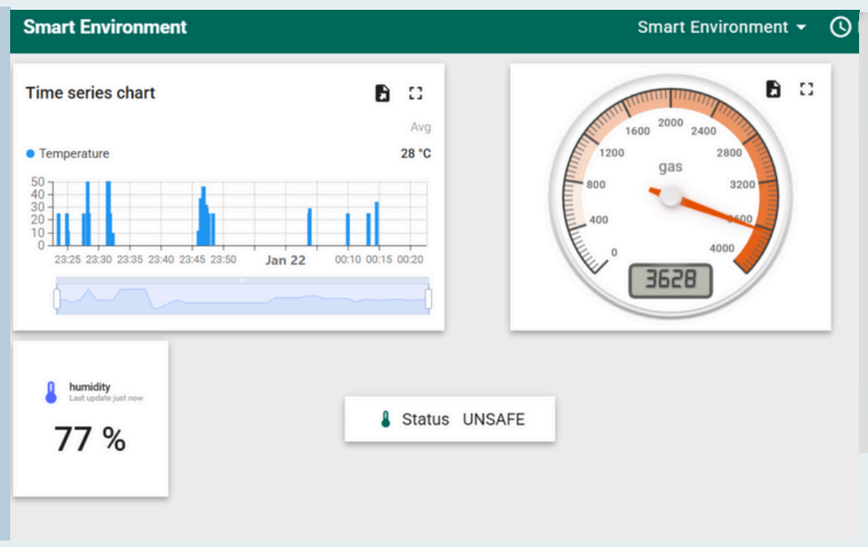

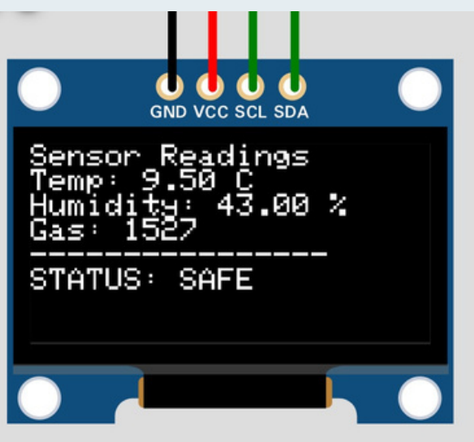

RESULTS & OBSERVATIONS

- Real-time data successfully transmitted using MQTT
- Dashboard updated instantly with live sensor values
- Gas threshold correctly triggered UNSAFE status
- OLED and LED provided effective local feedback

CONCLUSION

The Smart Environment Monitoring System successfully demonstrates an end-to-end IoT solution, integrating sensors, communication protocols, cloud analytics, and real-time visualization. The system improves environmental awareness and safety through continuous monitoring and automated alerts.

FUTURE ENHANCEMENTS

- Mobile application integration
- Email / SMS alert notifications
- AI-based predictive analysis
- Additional sensors (PM2.5, CO_2)
- Edge-based anomaly detection

GROUP MEMBERS

- Hasibullah Naeim - AIU22102121
- Md Mehedi Hasan - AIU22102236
- Anas Ismail Ahmed - AIU 22102251

REFERENCES (APA STYLE)

- Espressif Systems. (2023). ESP32 series datasheet. https://www.espressif.com/
- Adafruit Industries. (2023). DHT22 temperature-humidity sensor. https://learn.adafruit.com/
- Han, J., Kamber, M., & Pei, J. (2012). Data mining: Concepts and techniques (3rd ed.). Morgan Kaufmann.
- ThingsBoard. (2024). ThingsBoard IoT platform documentation. https://thingsboard.io/docs/
- MQTT Version 3.1.1. (2014). OASIS standard. https://docs.oasis-open.org/mqtt/mqtt/v3.1.1/
- Al-Fuqaha, A., Guizani, M., Mohammadi, M., Aledhari, M., & Ayyash, M. (2015). Internet of Things: A survey on enabling technologies, protocols, and applications. IEEE Communications Surveys & Tutorials, 17(4), 2347–2376. .