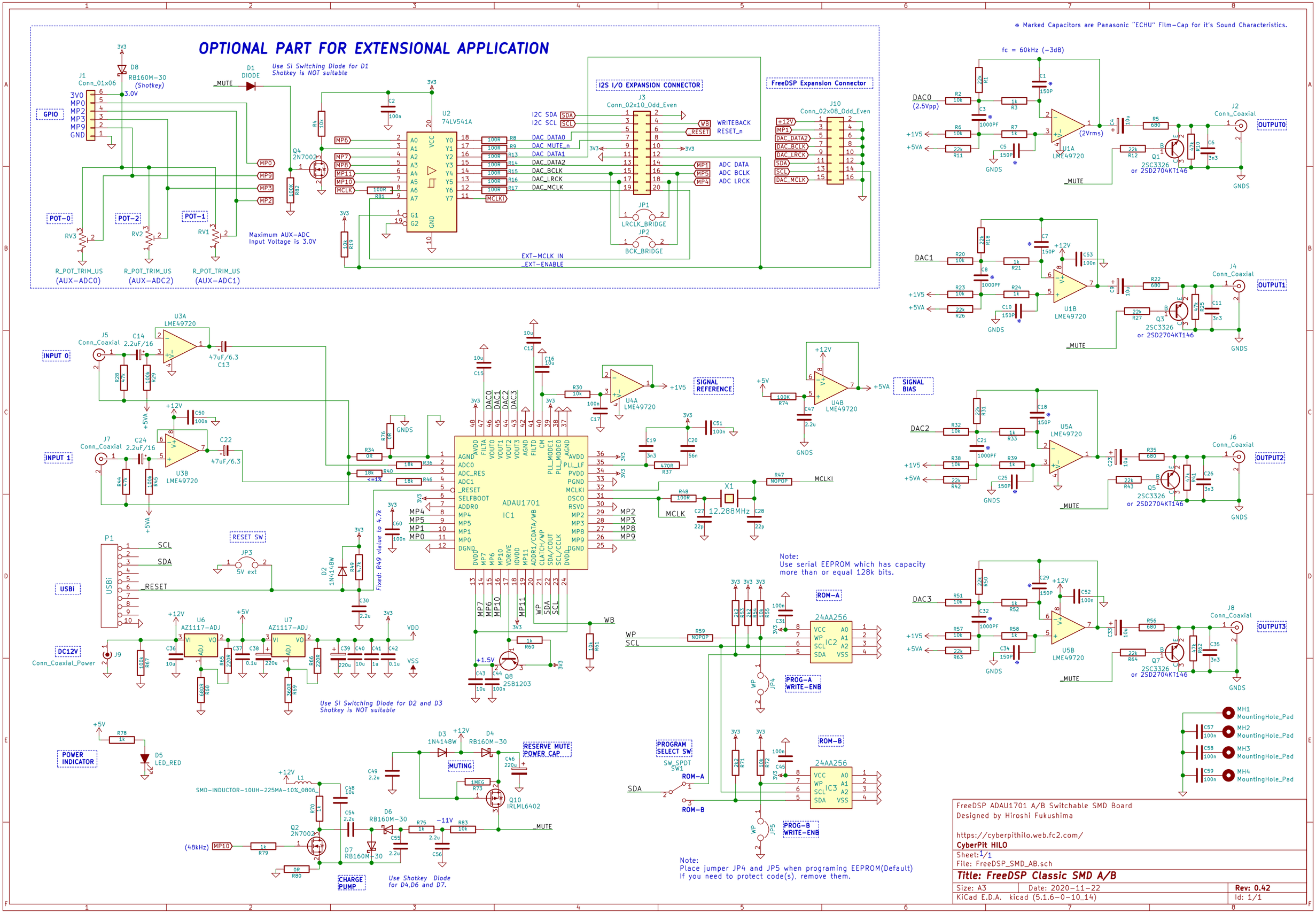
OPTIONAL PART FOR EXTENSIONAL APPLICATION
Use Si Switching Diode for D1
Shotkey is NOT suitable
Maximum AUX-ADC
Input Voltage is 3.0V
GPIO
POT-0
POT-2
POT-1
(AUX-ADC0)
(AUX-ADC2)
(AUX-ADC1)
I2S I/O EXPANSION CONNECTOR
FreeDSP Expansion Connector
I2C SDA
I2C SCL
WRITEBACK
RESET_n
DAC DATA0
DAC MUTE_n
DAC DATA1
DAC DATA2
DAC_BCLK
DAC_LRCK
DAC_MCLK
ADC DATA
ADC BCLK
ADC LRCK
LRCLK_BRIDGE
BCK_BRIDGE
EXT-MCLK IN
_EXT-ENABLE
* Marked Capacitors are Panasonic "ECHU" Film-Cap for it's Sound Characteristics.
fc = 60kHz (-3dB)
DAC0
(2.5Vpp)
(2Vrms)
OUTPUT0
DAC1
OUTPUT1
DAC2
OUTPUT2
DAC3
OUTPUT3
2SC3326
or 2SD2704KT146
INPUT 0
INPUT 1
SIGNAL REFERENCE
SIGNAL BIAS
ADAU1701
IC1
12.288MHz
USBi
RESET SW
5V ext
DC12V
Conn_Coaxial_Power
Fixed: R49 value to 4.7k
Use Si Switching Diode for D2 and D3
Shotkey is NOT suitable
Note:
Use serial EEPROM which has capacity
more than or equal 128k bits.
ROM-A
ROM-B
PROG-A WRITE-ENB
PROG-B WRITE-ENB
PROGRAM SELECT SW
POWER INDICATOR
MUTING
RESERVE MUTE POWER CAP
CHARGE PUMP
Use Shotkey Diode
for D4,D6 and D7.
Note:
Place jumper JP4 and JP5 when programing EEPROM(Default)
If you need to protect code(s), remove them.
FreeDSP ADAU1701 A/B Switchable SMD Board
Designed by Hiroshi Fukushima
https://cyberpithilo.web.fc2.com/
CyberPit HILO
Sheet:1/1
File: FreeDSP_SMD_AB.sch
Title: FreeDSP Classic SMD A/B
Size: A3
Date: 2020-11-22
Rev: 0.42
KiCad E.D.A. kicad (5.1.6-0-10_14)
Id: 1/1