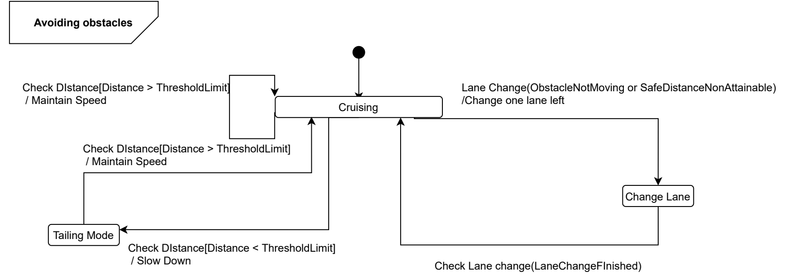
Avoiding obstacles
Check DIstance[Distance > ThresholdLimit]
/ Maintain Speed
Cruising
Lane Change(ObstacleNotMoving or SafeDistanceNonAttainable)
/Change one lane left
Check DIstance[Distance > ThresholdLimit]
/ Maintain Speed
Change Lane
Tailing Mode
Check DIstance[Distance < ThresholdLimit]
/ Slow Down
Check Lane change(LaneChangeFInished)

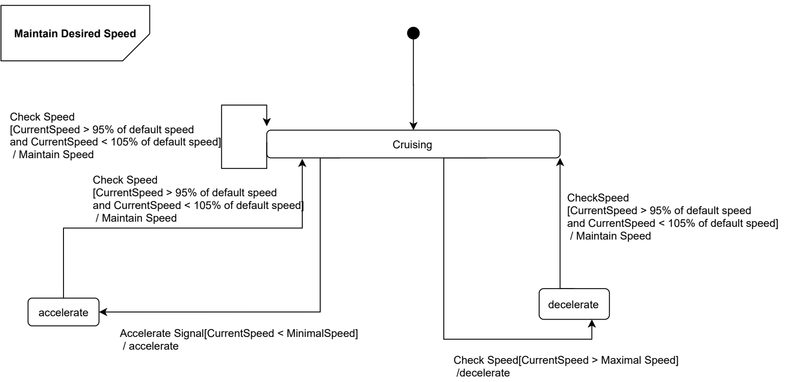
Maintain Desired Speed
Check Speed
[CurrentSpeed > 95% of default speed
and CurrentSpeed < 105% of default speed]
/ Maintain Speed
Cruising
Check Speed
[CurrentSpeed > 95% of default speed
and CurrentSpeed < 105% of default speed]
/ Maintain Speed
CheckSpeed
[CurrentSpeed > 95% of default speed
and CurrentSpeed < 105% of default speed]
/ Maintain Speed
accelerate
decelerate
Accelerate Signal[CurrentSpeed < MinimalSpeed]
/ accelerate
Check Speed[CurrentSpeed > Maximal Speed]
/decelerate

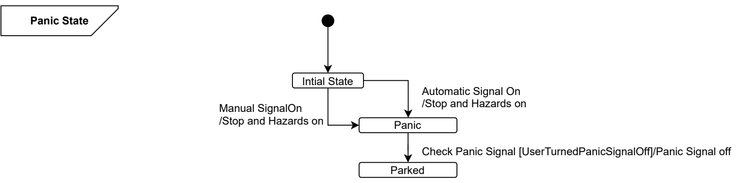
Panic State
Intial State
Automatic Signal On
/Stop and Hazards on
Manual SignalOn
/Stop and Hazards on
Panic
Check Panic Signal [UserTurnedPanicSignalOff]/Panic Signal off
Parked

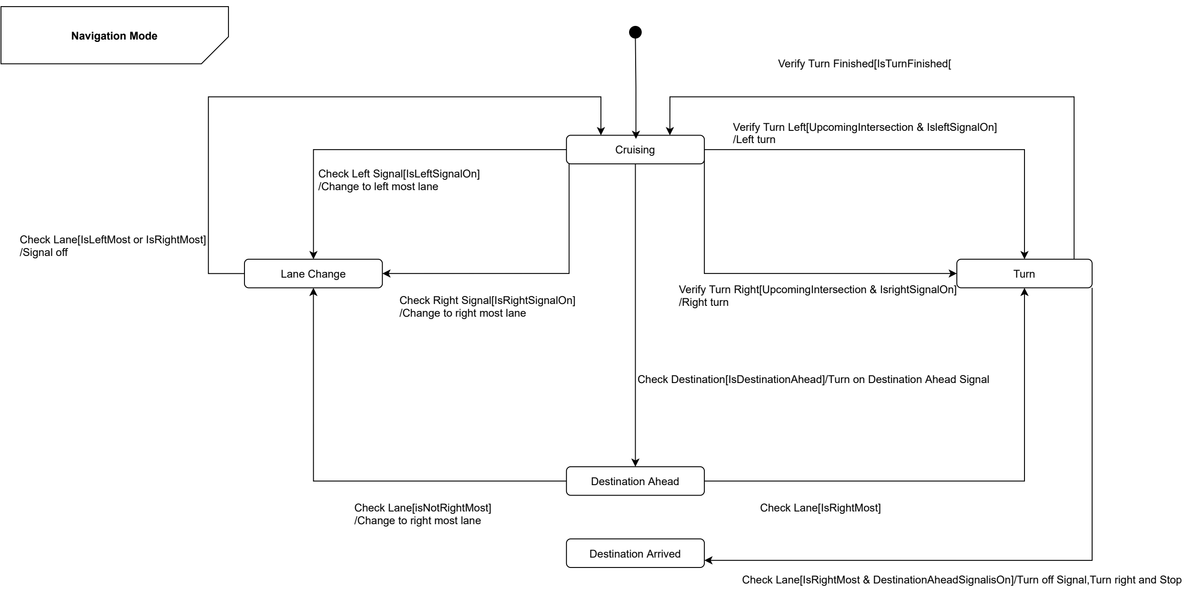
Navigation Mode
Verify Turn Finished[IsTurnFinished[
Verify Turn Left[UpcomingIntersection & IsleftSignalOn]
/Left turn
Cruising
Check Left Signal[IsLeftSignalOn]
/Change to left most lane
Check Lane[IsLeftMost or IsRightMost]
/Signal off
Lane Change
Turn
Verify Turn Right[UpcomingIntersection & IsrightSignalOn]
/Right turn
Check Right Signal[IsRightSignalOn]
/Change to right most lane
Check Destination[IsDestinationAhead]/Turn on Destination Ahead Signal
Destination Ahead
Check Lane[isNotRightMost]
/Change to right most lane
Check Lane[IsRightMost]
Destination Arrived
Check Lane[IsRightMost & DestinationAheadSignalisOn]/Turn off Signal,Turn right and Stop

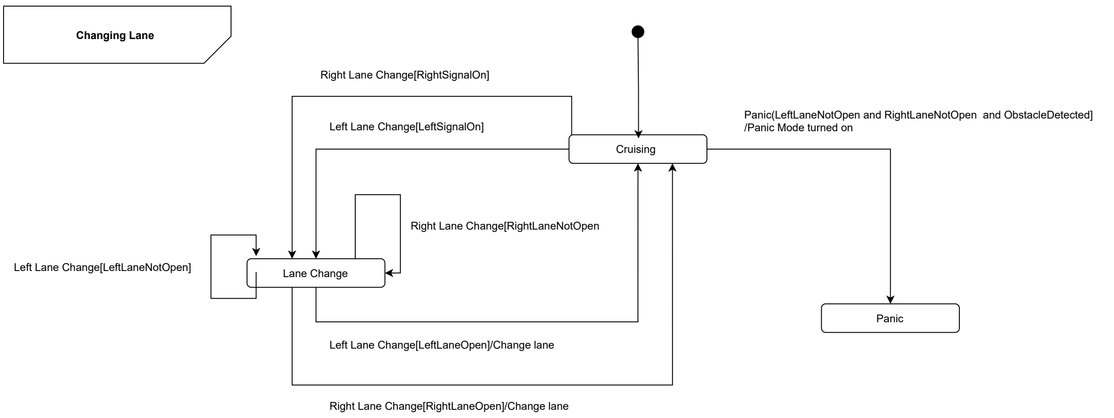
Changing Lane
Right Lane Change[RightSignalOn]
Left Lane Change[LeftSignalOn]
Panic(LeftLaneNotOpen and RightLaneNotOpen and ObstacleDetected]
/Panic Mode turned on
Cruising
Right Lane Change[RightLaneNotOpen
Left Lane Change[LeftLaneNotOpen]
Lane Change
Panic
Left Lane Change[LeftLaneOpen]/Change lane
Right Lane Change[RightLaneOpen]/Change lane