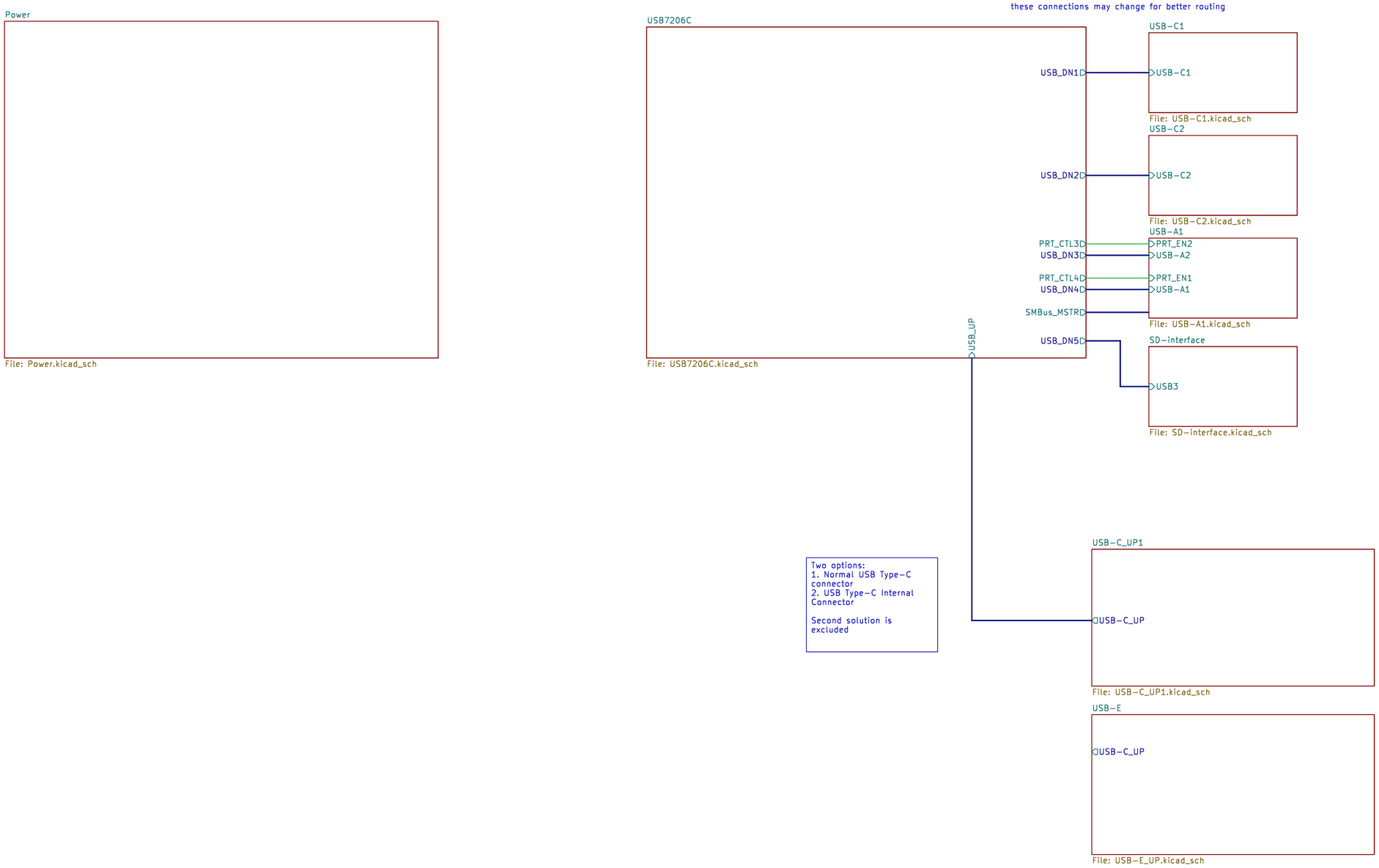

Sheet: /
File: USB_hub.kicad_sch

Title: USB Hub

Size: A3	Date:	Rev:
KiCad E.D.A. 9.0.3		Id: 1/9

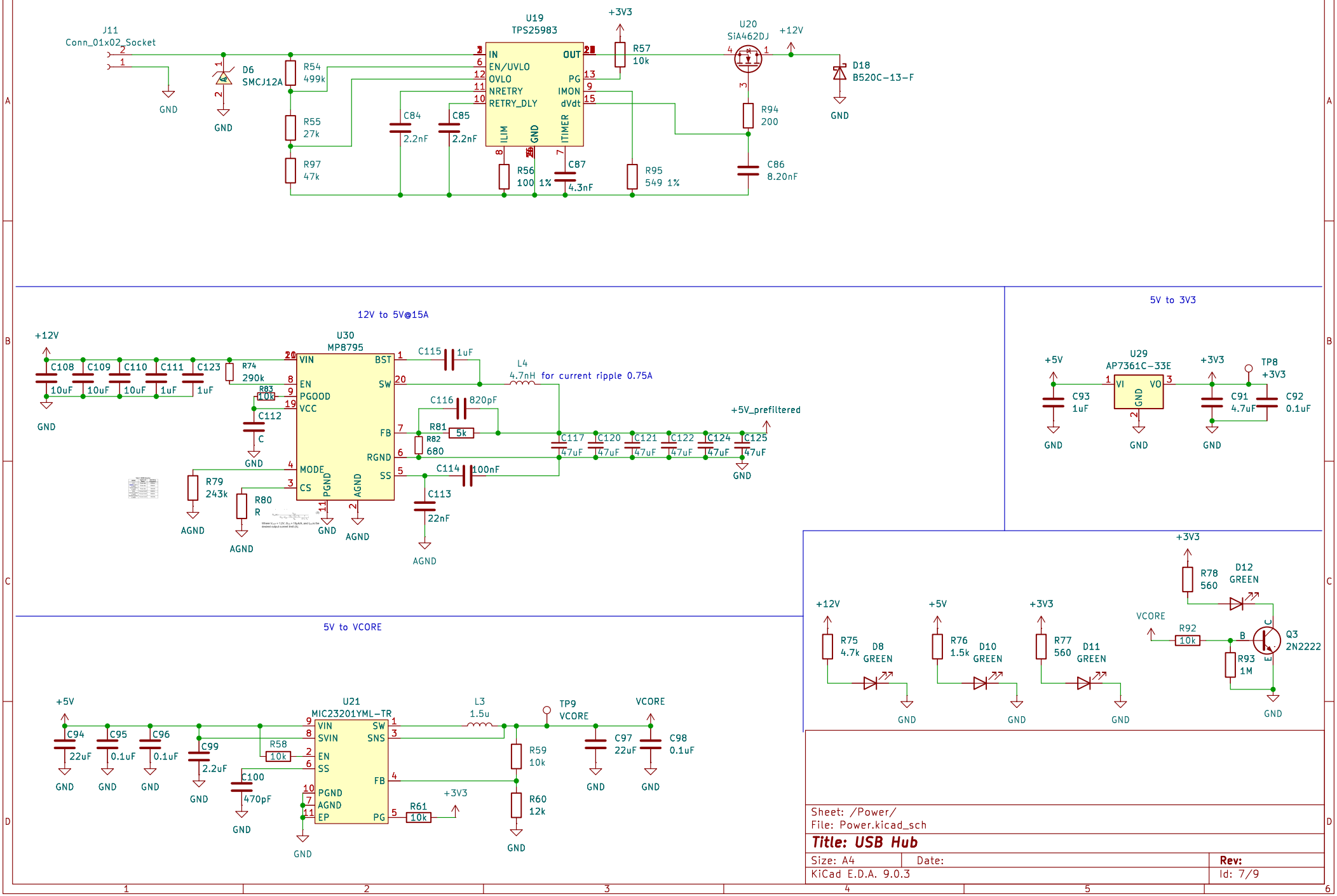

Sheet: /Power/
File: Power.kicad_sch

Title: USB Hub

Size: A4	Date:	Rev:
KiCad E.D.A. 9.0.3		Id: 7/9

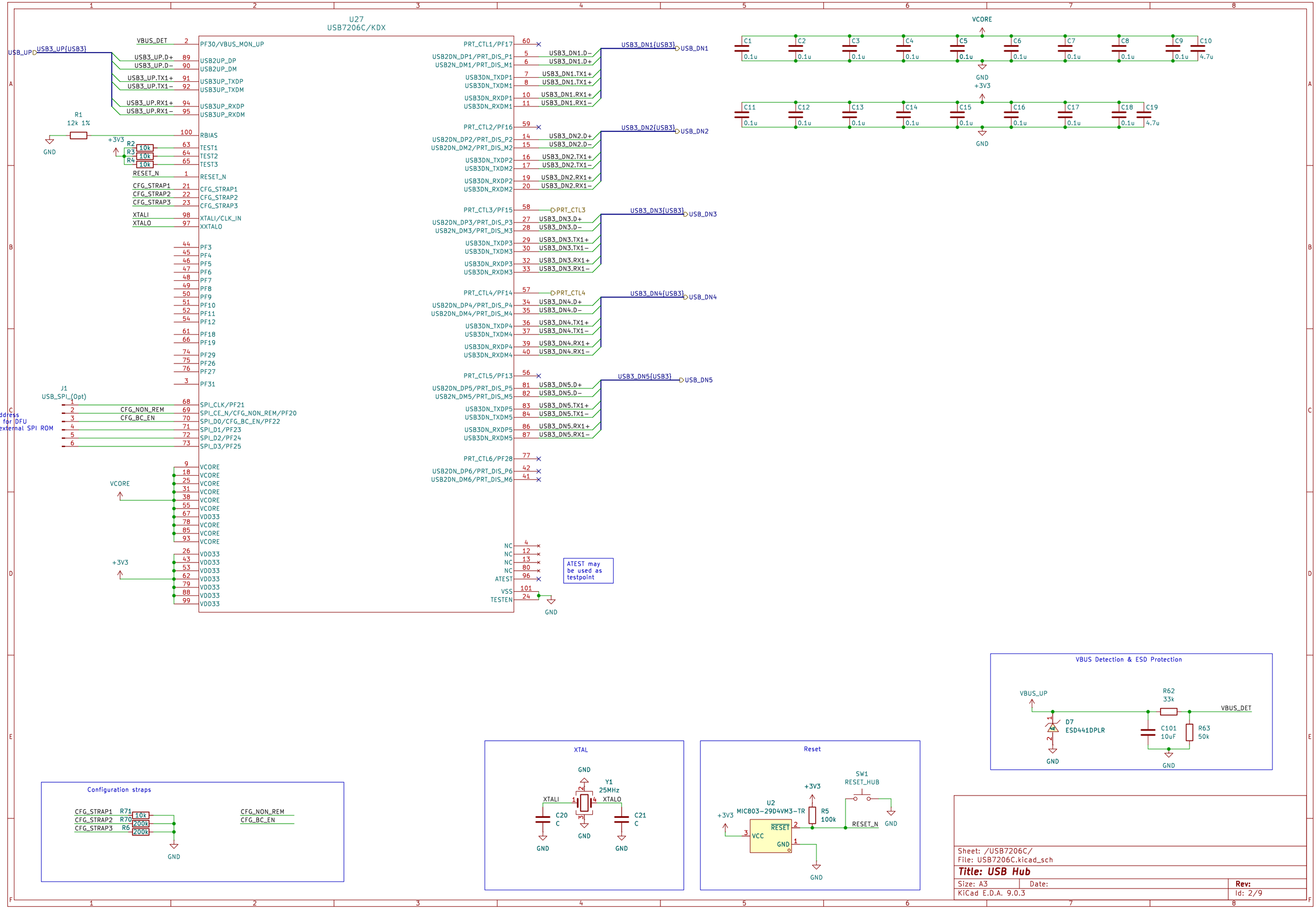

Sheet: /USB7206C/
File: USB7206C.kicad_sch

Title: USB Hub

Size: A3	Date:	Rev:
KiCad E.D.A. 9.0.3		Id: 2/9

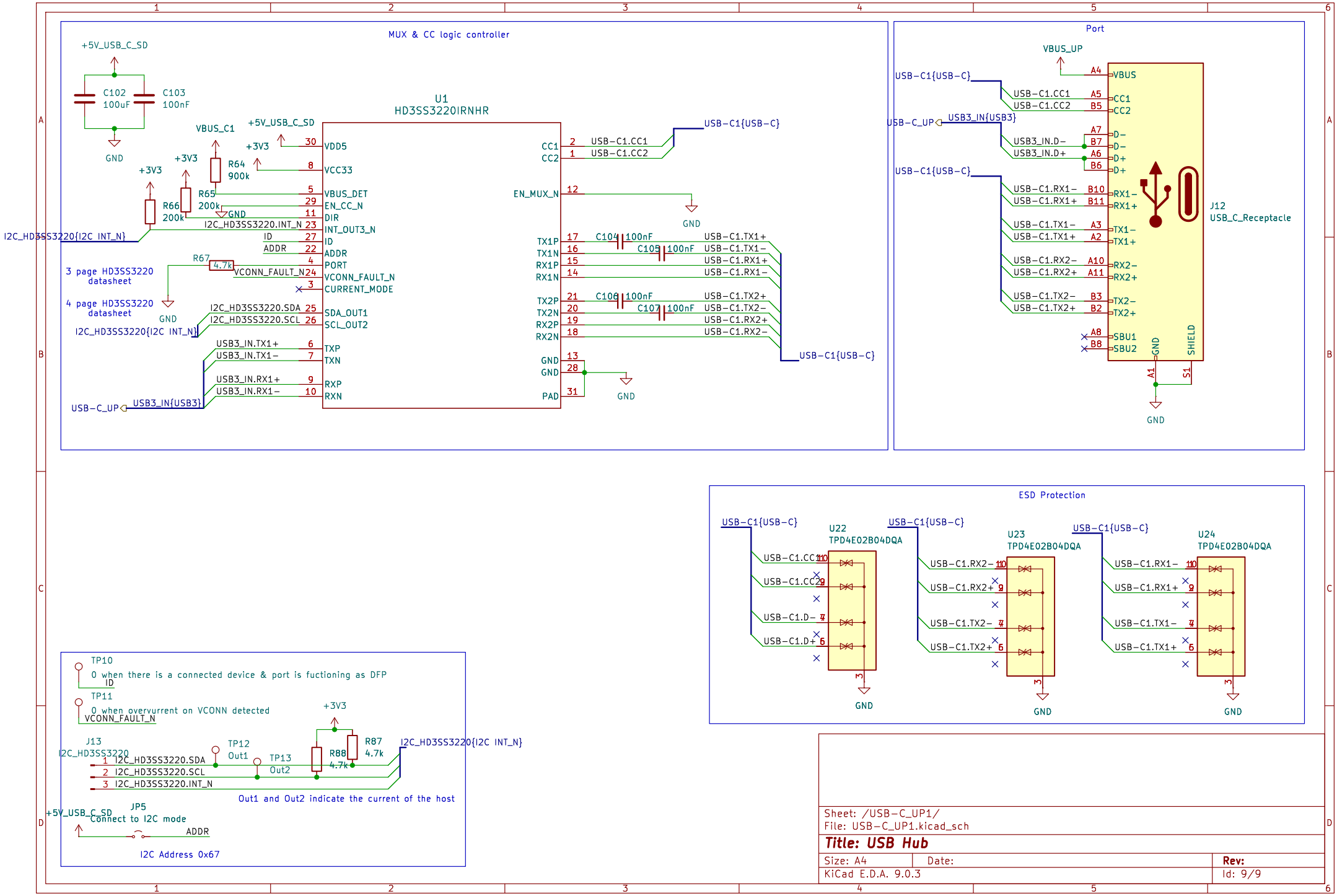
MUX & CC logic controller
+5V_USB_C_SD
C102 100uF
C103 100nF
GND
U1
HD3SS3220IRNHR
VBUS_C1
+5V_USB_C_SD
+3V3
R64 900k
R65 200k
R66 200k
VDD5
VCC33
VBUS_DET
EN_CC_N
DIR
INT_OUT3_N
ID
ADDR
PORT
VCONN_FAULT_N
CURRENT_MODE
SDA_OUT1
SCL_OUT2
TXP
TXN
RXP
RXN
CC1
CC2
EN_MUX_N
TX1P
TX1N
RX1P
RX1N
TX2P
TX2N
RX2P
RX2N
PAD
USB-C1{USB-C}
USB-C1.CC1
USB-C1.CC2
USB-C1.TX1+
USB-C1.TX1-
USB-C1.RX1+
USB-C1.RX1-
USB-C1.TX2+
USB-C1.TX2-
USB-C1.RX2+
USB-C1.RX2-
C104 100nF
C105 100nF
C106 100nF
C107 100nF
I2C_HD3SS3220{I2C INT_N}
I2C_HD3SS3220.INT_N
I2C_HD3SS3220.SDA
I2C_HD3SS3220.SCL
R67 4.7k
VCONN_FAULT_N
3 page HD3SS3220 datasheet
4 page HD3SS3220 datasheet
USB3_IN.TX1+
USB3_IN.TX1-
USB3_IN.RX1+
USB3_IN.RX1-
USB-C_UP
USB3_IN{USB3}
Port
VBUS_UP
VBUS
CC1
CC2
D-
D+
RX1-
RX1+
TX1-
TX1+
RX2-
RX2+
TX2-
TX2+
SBU1
SBU2
SHIELD
J12
USB_C_Receptacle
ESD Protection
U22
TPD4E02B04DQA
U23
TPD4E02B04DQA
U24
TPD4E02B04DQA
TP10
0 when there is a connected device & port is fuctioning as DFP
ID
TP11
0 when overvurrent on VCONN detected
VCONN_FAULT_N
J13
I2C_HD3SS3220
TP12
Out1
TP13
Out2
R87 4.7k
R88 4.7k
Out1 and Out2 indicate the current of the host
JP5
Connect to I2C mode
ADDR
I2C Address 0x67
Sheet: /USB-C_UP1/
File: USB-C_UP1.kicad_sch
Title: USB Hub
Size: A4
Date:
Rev:
KiCad E.D.A. 9.0.3
Id: 9/9

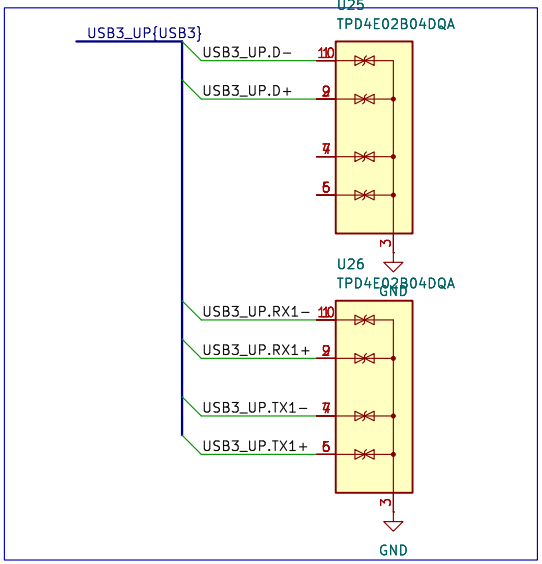

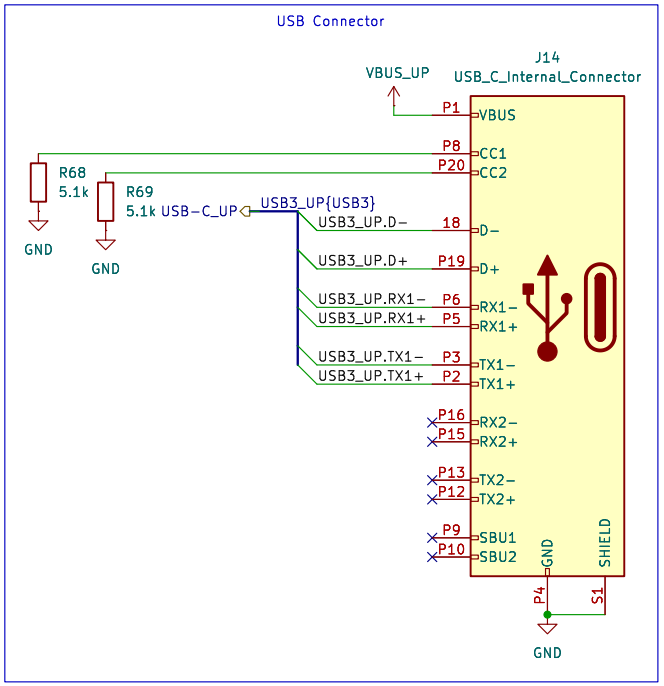

Sheet: /USB−E/
File: USB−E_UP.kicad_sch

Title: USB Hub

Size: A4	Date:	Rev:
KiCad E.D.A. 9.0.3		Id: 10/9

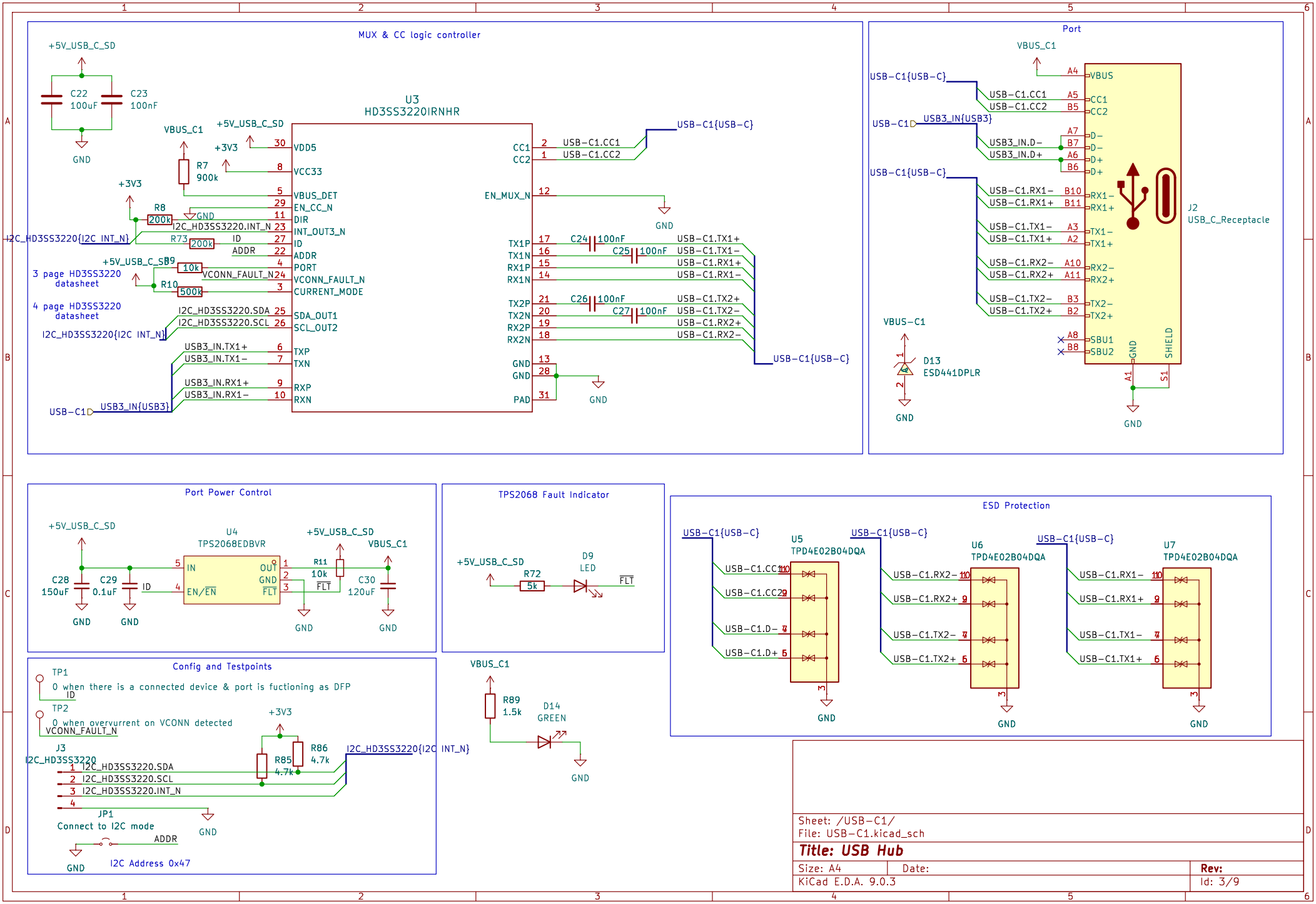
MUX & CC logic controller
U3
HD3SS3220IRNHR
+5V_USB_C_SD
C22 100uF
C23 100nF
GND
VBUS_C1
R7 900k
+3V3
R8 200k
R73 200k
R9 10k
R10 500k
3 page HD3SS3220 datasheet
4 page HD3SS3220 datasheet
I2C_HD3SS3220{I2C INT_N}
USB3_IN{USB3}
USB-C1
USB-C1{USB-C}
VDD5
VCC33
VBUS_DET
EN_CC_N
DIR
INT_OUT3_N
ID
ADDR
PORT
VCONN_FAULT_N
CURRENT_MODE
SDA_OUT1
SCL_OUT2
TXP
TXN
RXP
RXN
I2C_HD3SS3220.INT_N
I2C_HD3SS3220.SDA
I2C_HD3SS3220.SCL
USB3_IN.TX1+
USB3_IN.TX1−
USB3_IN.RX1+
USB3_IN.RX1−
CC1
CC2
USB-C1.CC1
USB-C1.CC2
EN_MUX_N
TX1P
TX1N
RX1P
RX1N
TX2P
TX2N
RX2P
RX2N
C24 100nF
C25 100nF
C26 100nF
C27 100nF
USB-C1.TX1+
USB-C1.TX1−
USB-C1.RX1+
USB-C1.RX1−
USB-C1.TX2+
USB-C1.TX2−
USB-C1.RX2+
USB-C1.RX2−
PAD
Port
J2
USB_C_Receptacle
VBUS
CC1
CC2
D−
D+
RX1−
RX1+
TX1−
TX1+
RX2−
RX2+
TX2−
TX2+
SBU1
SBU2
SHIELD
USB3_IN.D−
USB3_IN.D+
VBUS−C1
D13
ESD441DPLR
Port Power Control
U4
TPS2068EDBVR
IN
OUT
GND
EN/EN
FLT
R11 10k
C28 150uF
C29 0.1uF
C30 120uF
ID
TPS2068 Fault Indicator
R72 5k
D9
LED
Config and Testpoints
TP1
0 when there is a connected device & port is fuctioning as DFP
TP2
0 when overvurrent on VCONN detected
VCONN_FAULT_N
J3
I2C_HD3SS3220
R85 4.7k
R86 4.7k
JP1
Connect to I2C mode
ADDR
I2C Address 0x47
R89 1.5k
D14
GREEN
ESD Protection
U5
TPD4E02B04DQA
U6
TPD4E02B04DQA
U7
TPD4E02B04DQA
USB-C1.CC1
USB-C1.CC2
USB-C1.D−
USB-C1.D+
USB-C1.RX2−
USB-C1.RX2+
USB-C1.TX2−
USB-C1.TX2+
USB-C1.RX1−
USB-C1.RX1+
USB-C1.TX1−
USB-C1.TX1+
Sheet: /USB-C1/
File: USB-C1.kicad_sch
Title: USB Hub
Size: A4
Date:
Rev:
KiCad E.D.A. 9.0.3
Id: 3/9

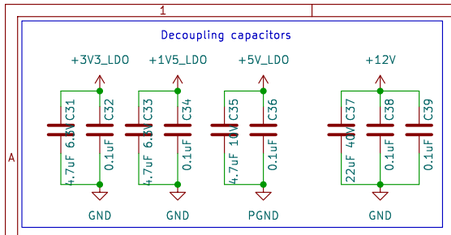

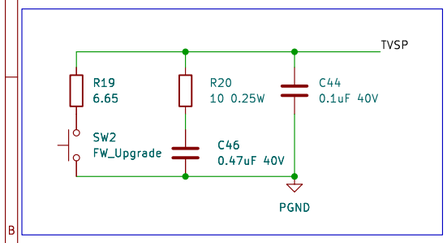

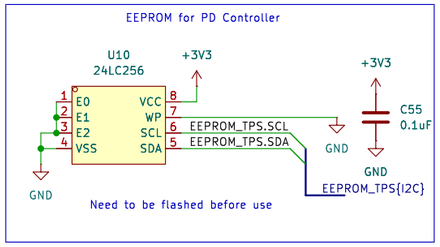

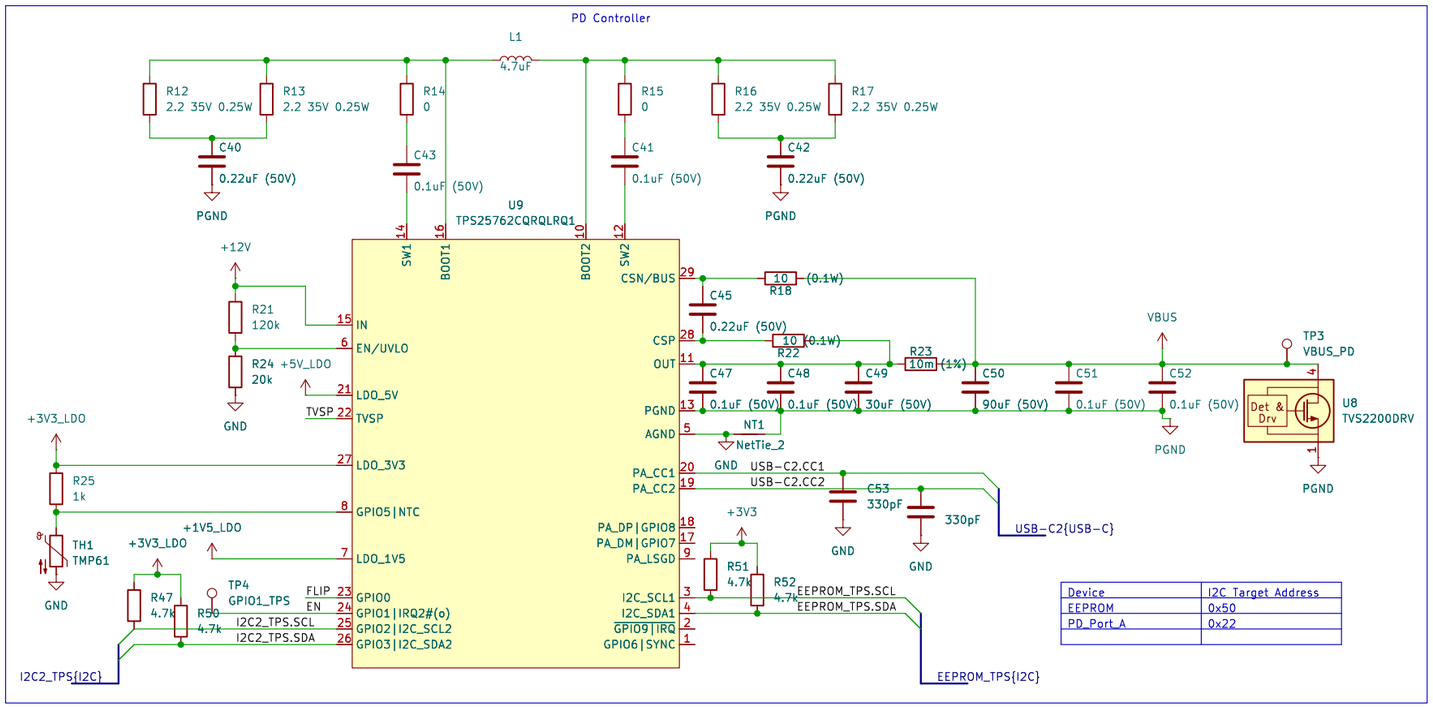

Device	I2C Target Address
EEPROM	0x50
PD_Port_A	0x22

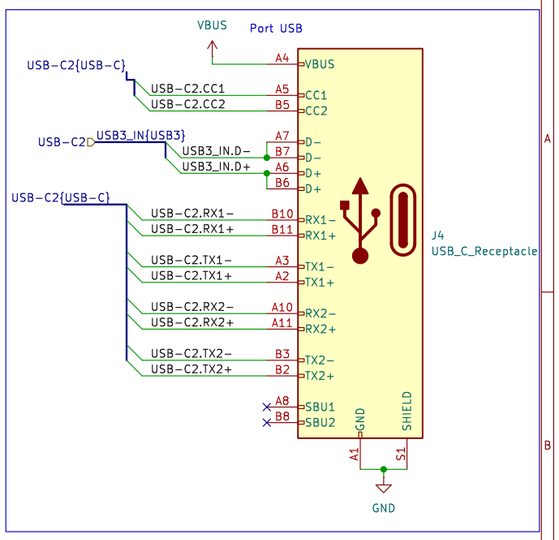

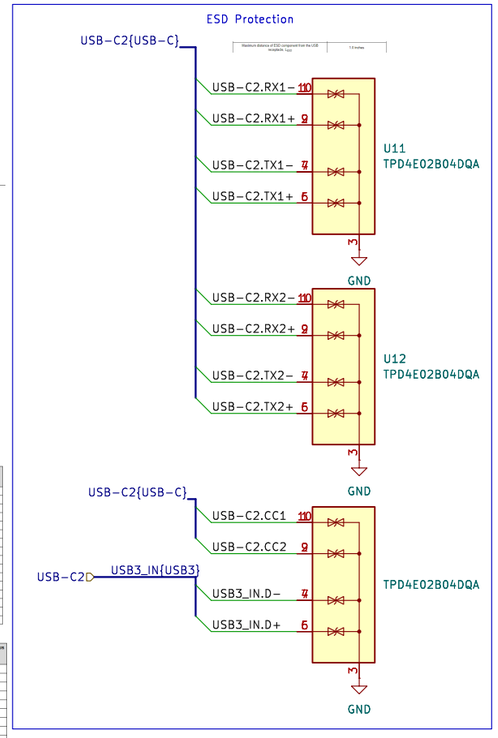

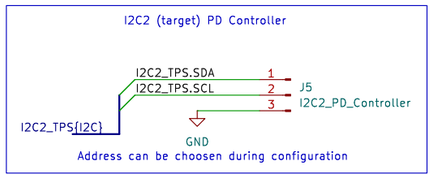

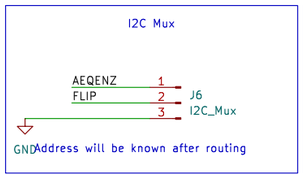

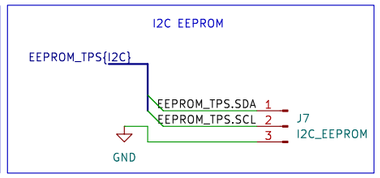

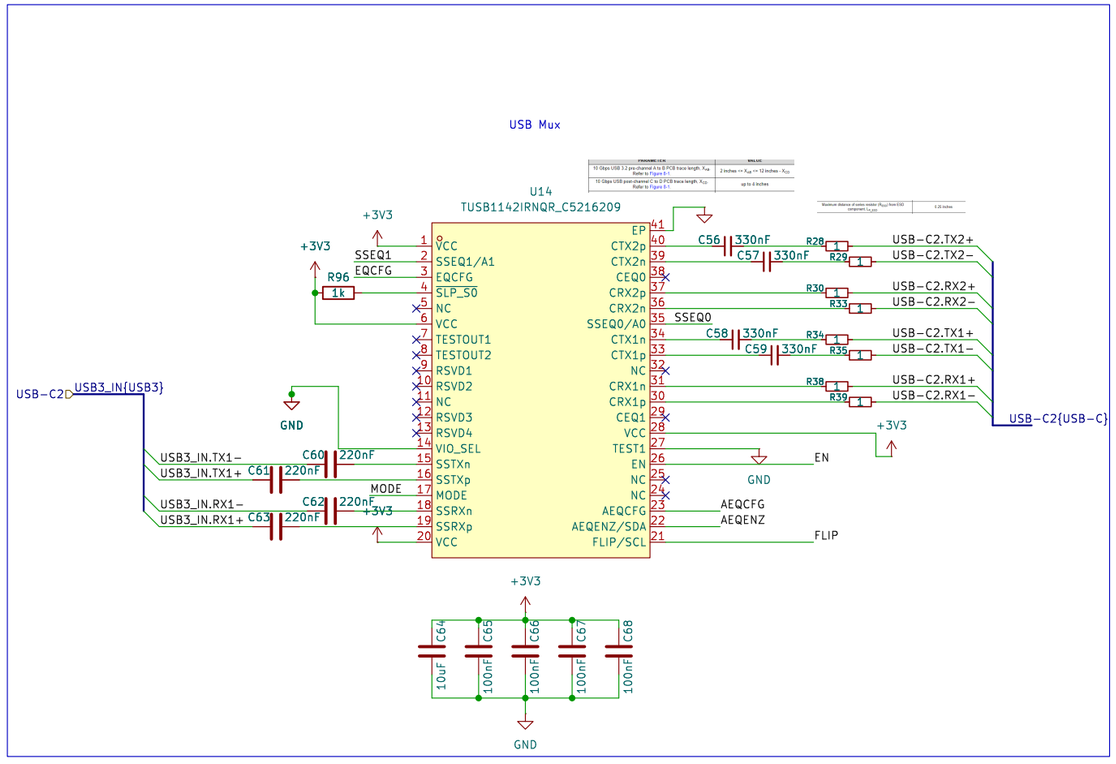

PARAMETER	VALUE
10 Gbps USB 3.2 pre-channel A to B PCB trace length, X_{AB} Refer to Figure 8-1.	2 inches <= X_{AB} <= 12 inches - X_{CD}
10 Gbps USB post-channel C to D PCB trace length, X_{CD} Refer to Figure 8-1.	up to 6 inches

Maximum distance of series resistor (R_{SSQ}) from ESD component (L_{ESD})	0.25 inches

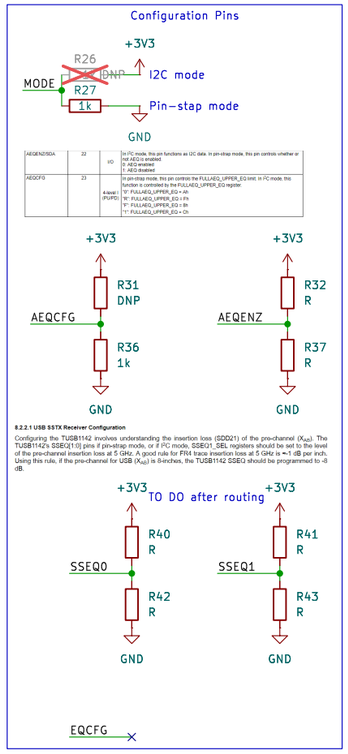

Register(s): CEQ0_SEL or CEQ2_SEL: Equalization Setting #	CEQ0 PIN Level	CEQ0 PIN Level	EQ Gain at 5 GHz minus Gain at 100 MHz (dB)
0	0	0	-0.4
1	0	R	1.9
2	0	F	3.5
3	0	1	5.0
4	R	0	6.1
5	R	R	7.2
6	R	F	8.0
7	R	1	8.8
8	F	0	9.6
9	F	R	10.2
10	F	F	10.7
11	F	1	11.2
12	1	0	11.6
13	1	R	12.0
14	1	F	12.4
15	1	1	12.7

Table 7-2. USB Connector Facing Port Receiver (CRX1 and CRX2 pins) Equalization Control

Register(s): SSEQ1_SEL Equalization Setting #	SSEQ1 PIN LEVEL	SSEQ0 PIN LEVEL	EQ Gain at 5 GHz minus Gain at 100 MHz (dB)
0	0	0	0.6
1	0	R	2.8
2	0	F	4.5
3	0	1	6.0
4	R	0	7.0
5	R	R	8.0
6	R	F	9.0
7	R	1	10.0
8	F	0	10.6
9	F	R	11.2
10	F	F	11.7
11	F	1	12.2
12	1	0	12.5
13	1	R	13.0
14	1	F	13.3
15	1	1	13.6

Table 7-3. USB Host Facing Port Receiver (SSTX) Equalization Control

Note

Adaptive EQ is only supported on CRX1 and CRX2. Adaptive EQ must only be used when CRX1 and CRX2 is connected to a USB receptacle. If CRX1 and CRX2 is connected directly (not through a USB receptacle) to a USB Host, USB Hub or USB Device, then adaptive EQ must be disabled. AEQ should never be enabled in a active cable application. If daisy chaining multiple TUSB1142, AEQ should only be enabled on the TUSB1142 that is near the USB receptacle.

Table 7-1. 4-Level Control Pin Settings

LEVEL	SETTINGS
0	Tie 1-kΩ 5% to GND.
R	Tie 20-kΩ 5% to GND.
F	Float (leave pin open)
1	Tie 1-kΩ 5% to V_{CC}.

Sheet: /USB-C2/
File: USB-C2.kicad_sch

Title: USB Hub

Size: A3	Date:	Rev:
KiCad E.D.A. 9.0.3		Id: 4/9

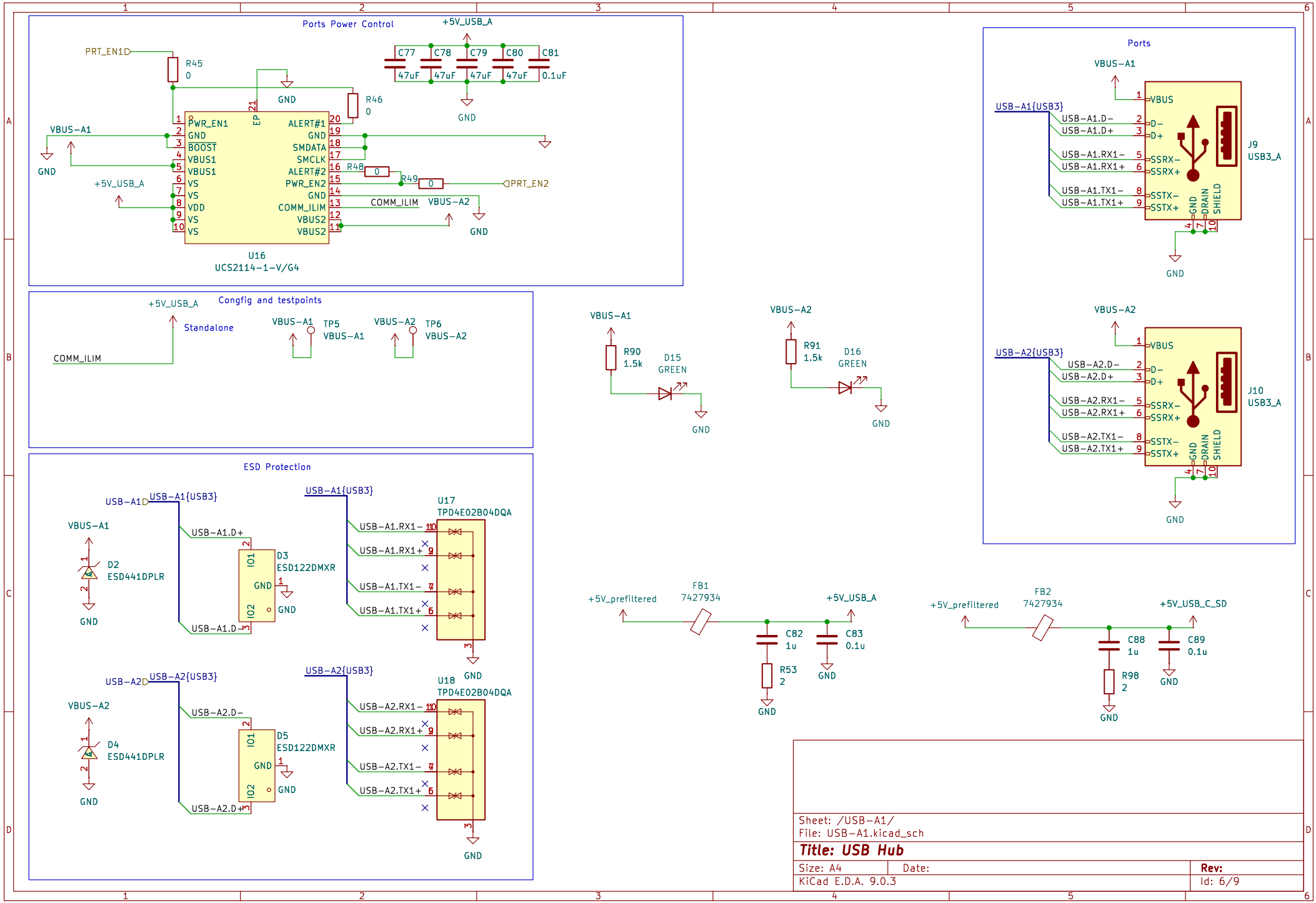

Sheet: /USB-A1/
File: USB-A1.kicad_sch

Title: USB Hub

Size: A4	Date:	Rev:
KiCad E.D.A. 9.0.3		Id: 6/9

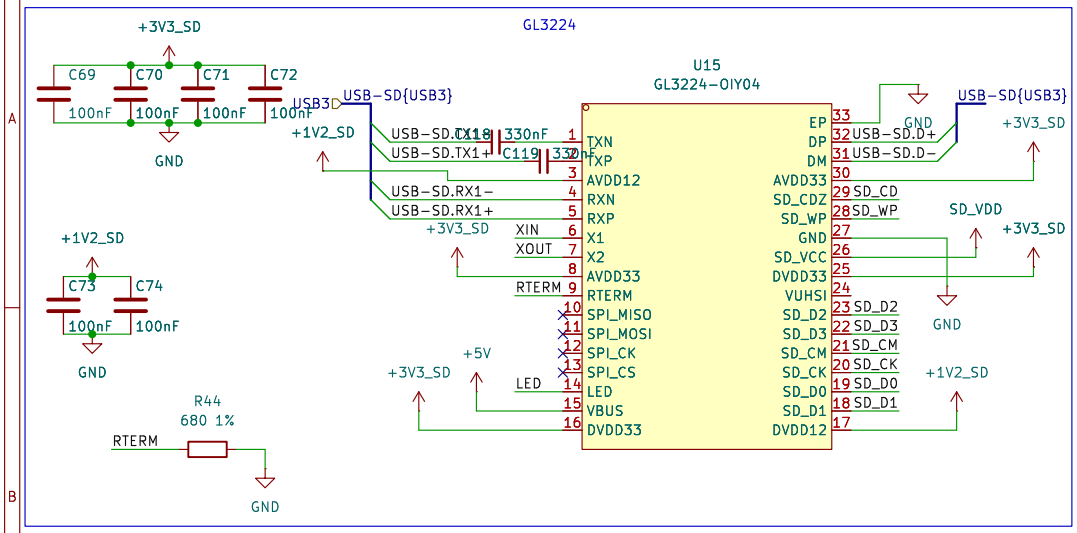

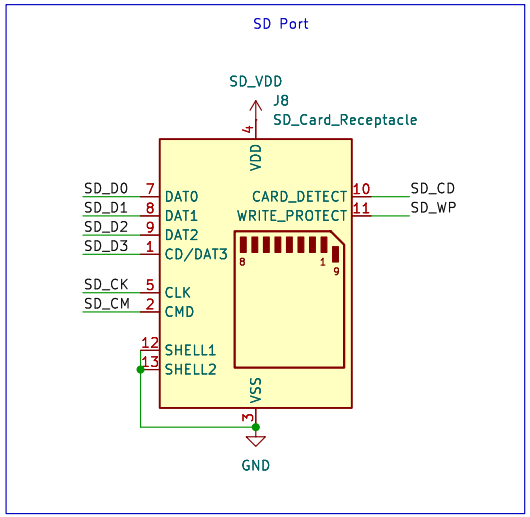

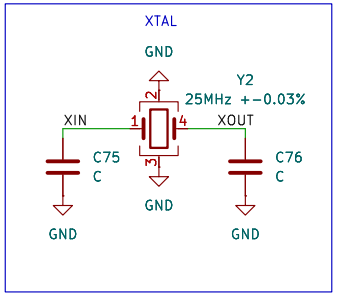

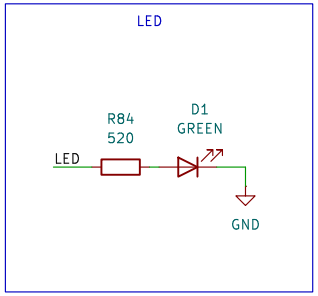

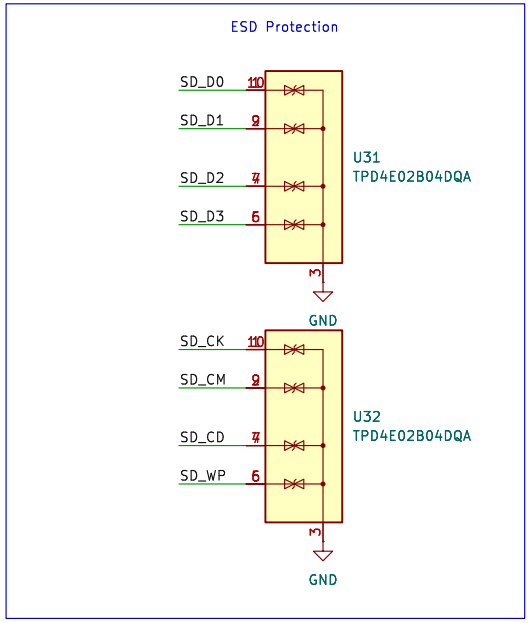

Sheet: /SD-interface/
File: SD-interface.kicad_sch

Title: USB Hub

Size: A4	Date:	Rev:
KiCad E.D.A. 9.0.3		Id: 5/9