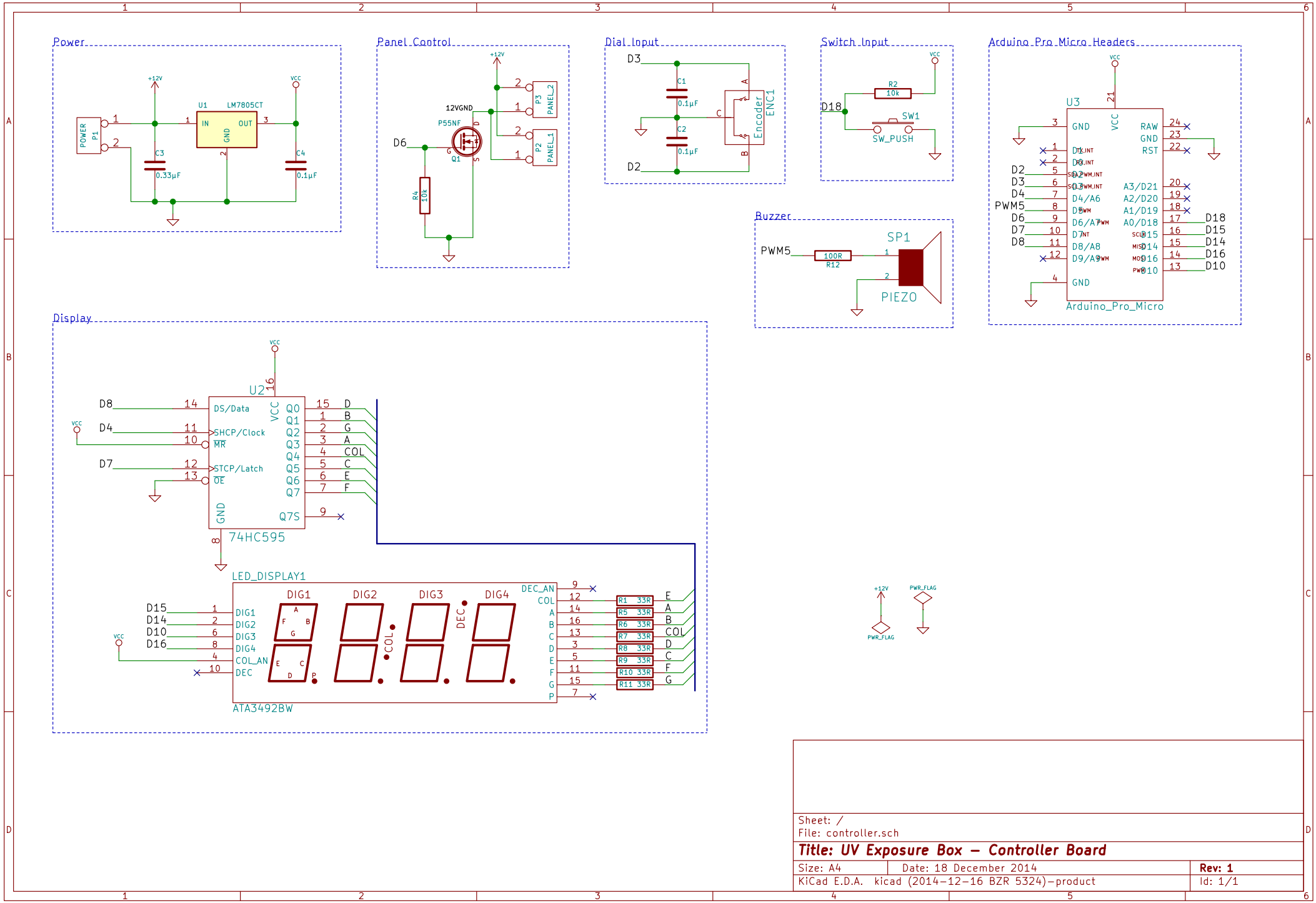

Sheet: /
File: controller.sch

Title: UV Exposure Box – Controller Board

Size: A4	Date: 18 December 2014	Rev: 1
KiCad E.D.A. kicad (2014-12-16 BZR 5324)-product		Id: 1/1