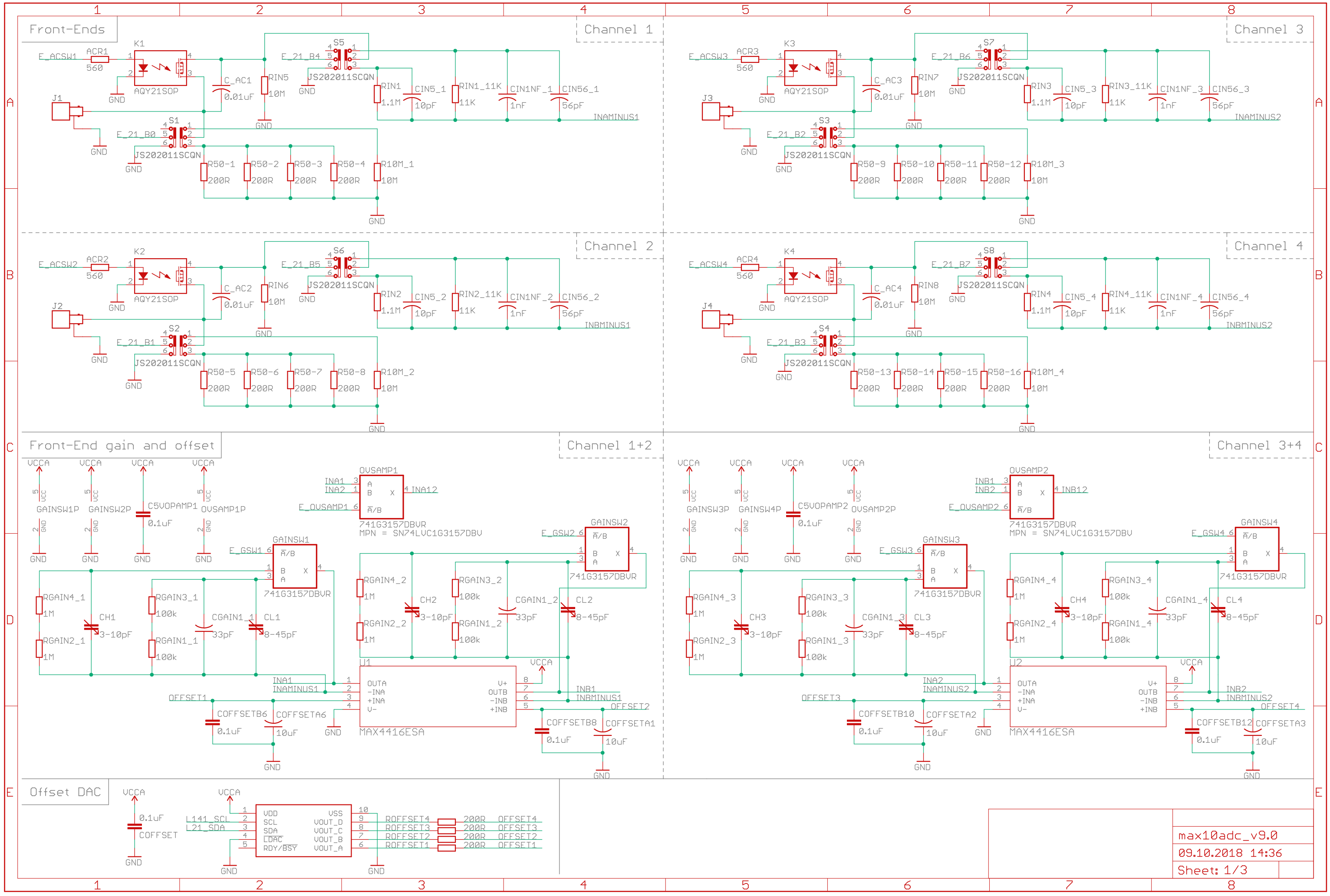
Front-Ends
Channel 1
Channel 2
Channel 3
Channel 4
Front-End gain and offset
Channel 1+2
Channel 3+4
Offset DAC
E_ACSW1
ACR1
560
K1
AQY21SOP
J1
C_AC1
0.01uF
RIN5
10M
E_21_B4
S5
JS202011SCQN
RIN1
1.1M
CIN5_1
10pF
RIN1_11K
11K
CIN1NF_1
1nF
CIN56_1
56pF
INAMINUS1
E_21_B0
S1
R50-1
200R
R50-2
200R
R50-3
200R
R50-4
200R
R10M_1
10M
E_ACSW2
ACR2
560
K2
J2
C_AC2
0.01uF
RIN6
10M
E_21_B5
S6
RIN2
1.1M
CIN5_2
10pF
RIN2_11K
11K
CIN1NF_2
1nF
CIN56_2
56pF
INBMINUS1
E_21_B1
S2
R50-5
200R
R50-6
200R
R50-7
200R
R50-8
200R
R10M_2
10M
E_ACSW3
ACR3
560
K3
J3
C_AC3
0.01uF
RIN7
10M
E_21_B6
S7
RIN3
1.1M
CIN5_3
10pF
RIN3_11K
11K
CIN1NF_3
1nF
CIN56_3
56pF
INAMINUS2
E_21_B2
S3
R50-9
200R
R50-10
200R
R50-11
200R
R50-12
200R
R10M_3
10M
E_ACSW4
ACR4
560
K4
J4
C_AC4
0.01uF
RIN8
10M
E_21_B7
S8
RIN4
1.1M
CIN5_4
10pF
RIN4_11K
11K
CIN1NF_4
1nF
CIN56_4
56pF
INBMINUS2
E_21_B3
S4
R50-13
200R
R50-14
200R
R50-15
200R
R50-16
200R
R10M_4
10M
VCCA
GAINSW1P
GAINSW2P
C5VOPAMP1
0.1uF
OVSAMP1P
GND
OVSAMP1
INA1
INA2
INA12
E_OVSAMP1
741G3157DBVR
MPN = SN74LVC1G3157DBV
GAINSW1
E_GSW1
RGAIN4_1
1M
RGAIN2_1
1M
CH1
3-10pF
RGAIN3_1
100k
RGAIN1_1
100k
CGAIN1_1
33pF
CL1
8-45pF
GAINSW2
E_GSW2
RGAIN4_2
1M
RGAIN2_2
1M
CH2
3-10pF
RGAIN3_2
100k
RGAIN1_2
100k
CGAIN1_2
33pF
CL2
8-45pF
U1
OUTA
-INA
+INA
V-
V+
OUTB
-INB
+INB
MAX4416ESA
INA1
INAMINUS1
OFFSET1
COFFSETB6
0.1uF
COFFSETA6
10uF
INB1
INBMINUS1
OFFSET2
COFFSETB8
0.1uF
COFFSETA1
10uF
GAINSW3P
GAINSW4P
C5VOPAMP2
0.1uF
OVSAMP2P
OVSAMP2
INB1
INB2
INB12
E_OVSAMP2
741G3157DBVR
MPN = SN74LVC1G3157DBV
GAINSW3
E_GSW3
RGAIN4_3
1M
RGAIN2_3
1M
CH3
3-10pF
RGAIN3_3
100k
RGAIN1_3
100k
CGAIN1_3
33pF
CL3
8-45pF
GAINSW4
E_GSW4
RGAIN4_4
1M
RGAIN2_4
1M
CH4
3-10pF
RGAIN3_4
100k
RGAIN1_4
100k
CGAIN1_4
33pF
CL4
8-45pF
U2
INA2
INAMINUS2
OFFSET3
COFFSETB10
0.1uF
COFFSETA2
10uF
INB2
INBMINUS2
OFFSET4
COFFSETB12
0.1uF
COFFSETA3
10uF
COFFSET
0.1uF
L141_SCL
L21_SDA
VDD
SCL
SDA
LDAC
RDY/BSY
VSS
VOUT_D
VOUT_C
VOUT_B
VOUT_A
ROFFSET4
ROFFSET3
ROFFSET2
ROFFSET1
200R
OFFSET4
OFFSET3
OFFSET2
OFFSET1
max10adc_v9.0
09.10.2018 14:36
Sheet: 1/3

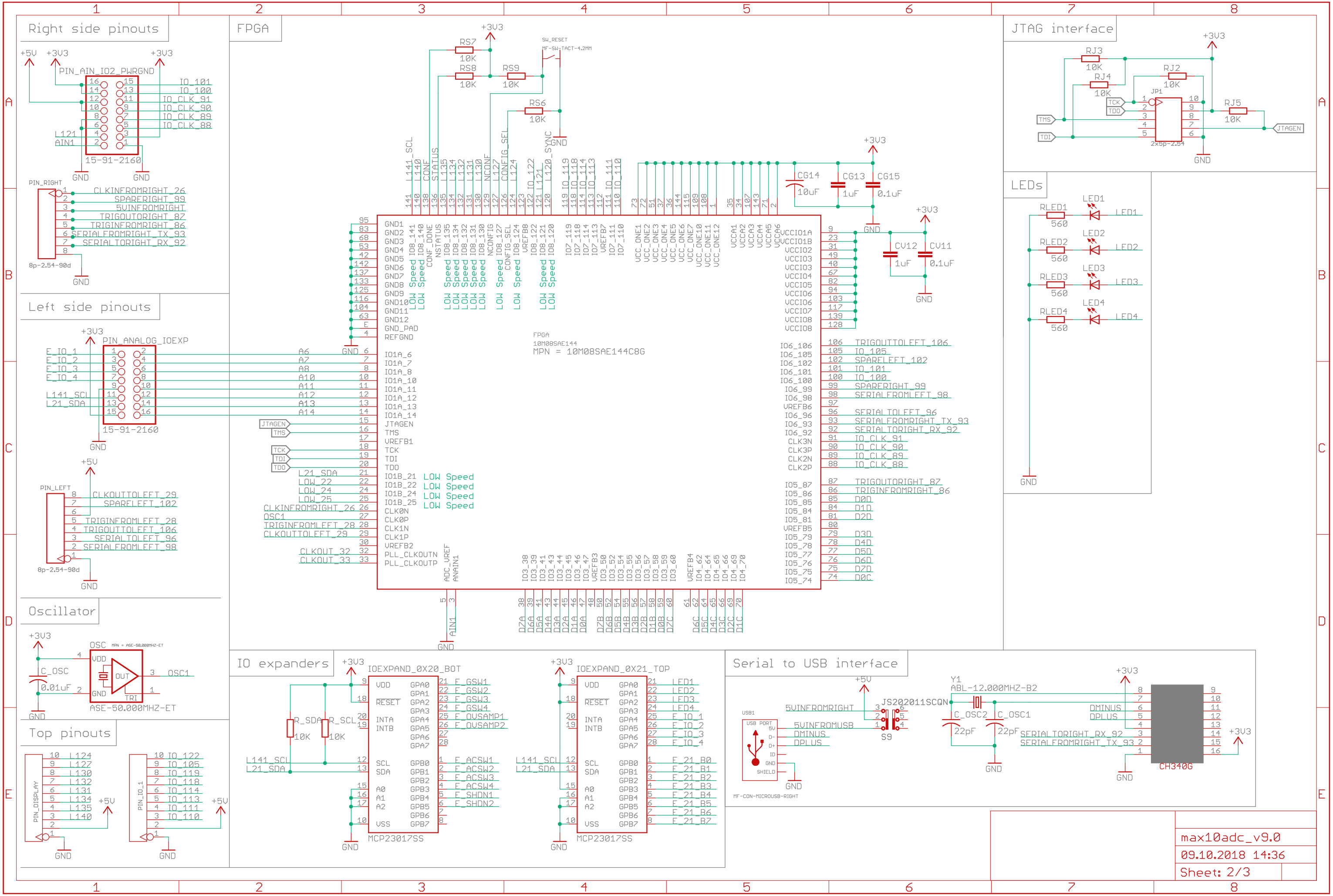
Right side pinouts
PIN_AIN_IO2_PWRGND
15-91-2160
PIN_RIGHT
8p-2.54-90d
Left side pinouts
PIN_ANALOG_IOEXP
15-91-2160
PIN_LEFT
8p-2.54-90d
Oscillator
OSC
ASE-50.000MHZ-ET
Top pinouts
PIN_DISPLAY
PIN_IO_1
FPGA
10M08SAE144
MPN = 10M08SAE144C8G
SW_RESET
MF-SW-TACT-4.2MM
IO expanders
IOEXPAND_0X20_BOT
IOEXPAND_0X21_TOP
MCP23017SS
JTAG interface
2x5p-2.54
LEDs
Serial to USB interface
USB1
USB PORT
MF-CON-MICROUSB-RIGHT
JS202011SCQN
S9
Y1
ABL-12.000MHZ-B2
CH340G
max10adc_v9.0
09.10.2018 14:36
Sheet: 2/3

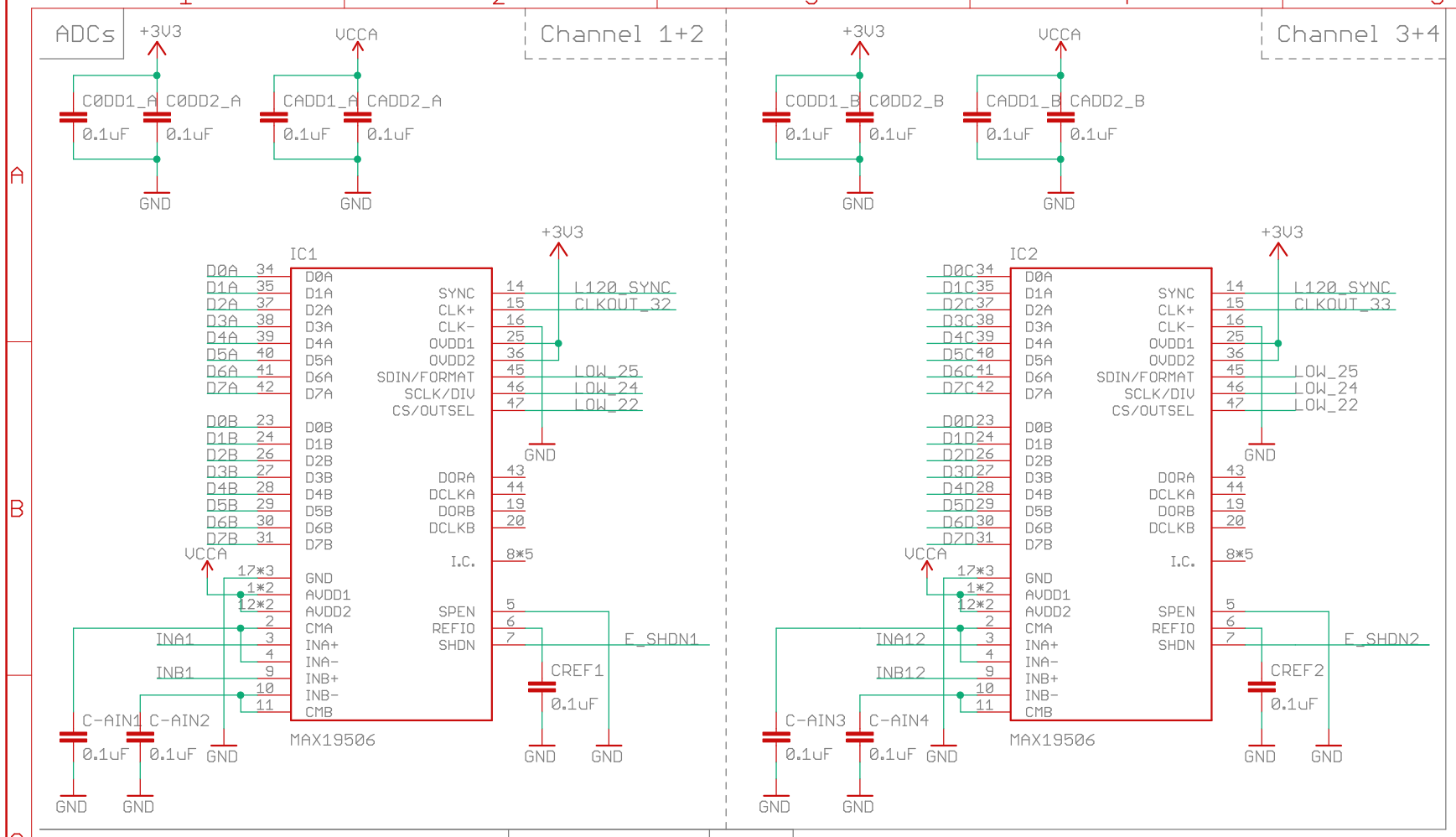

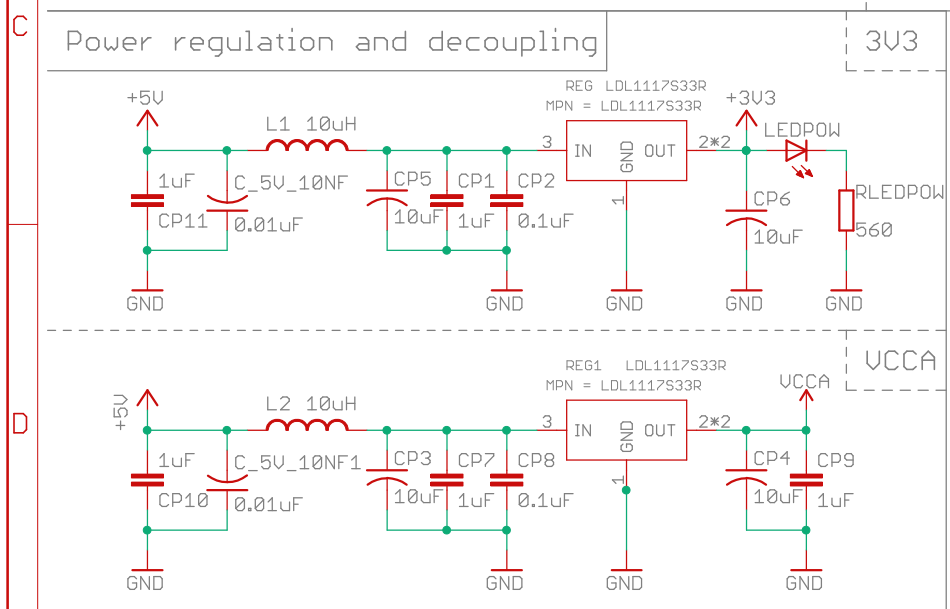

Misc.

OSHW Logo

max10adc_v9.0	
09.10.2018 14:36	
Sheet: 3/3	