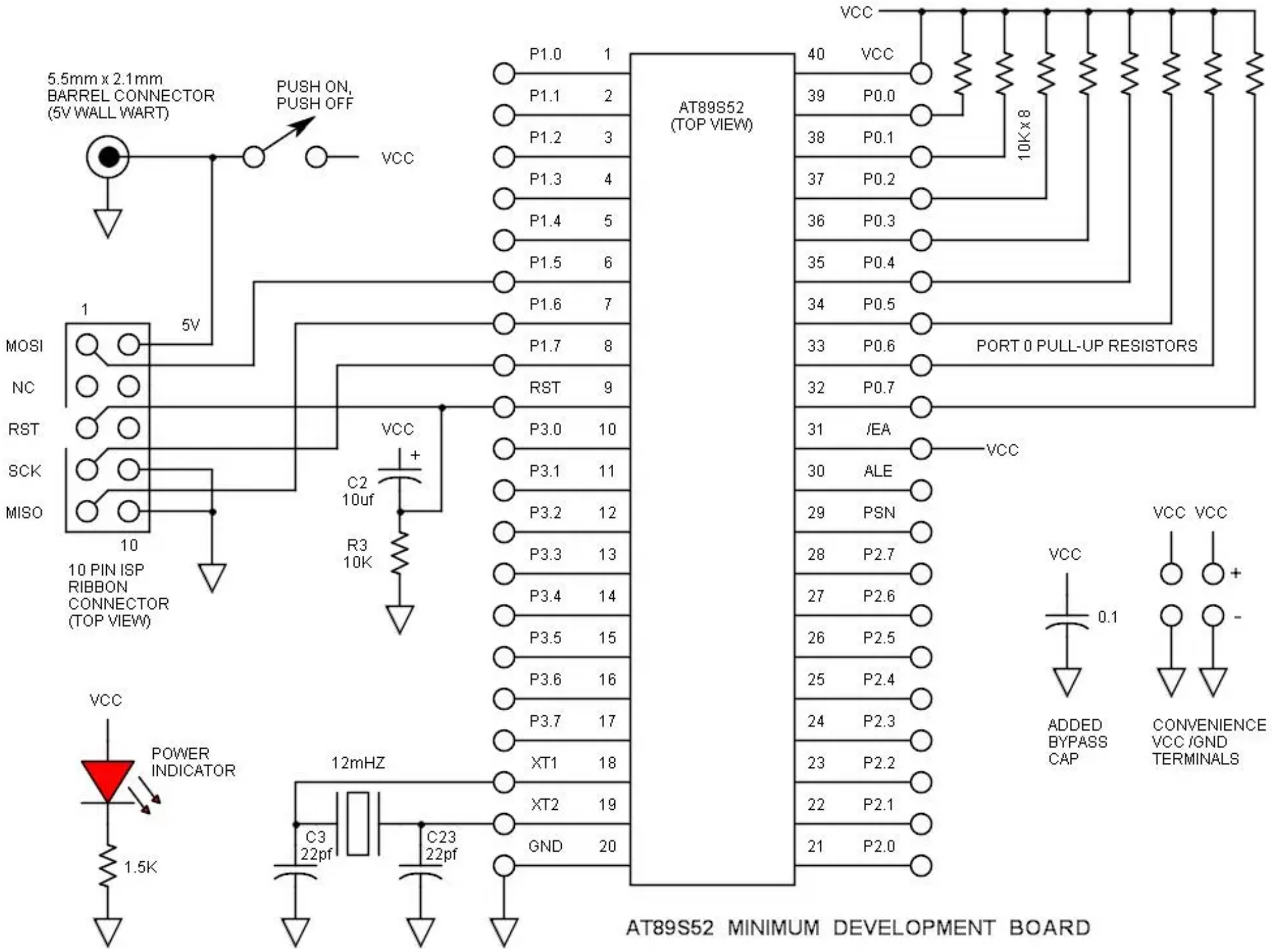
5.5mm x 2.1mm
BARREL CONNECTOR
(5V WALL WART)
PUSH ON,
PUSH OFF
VCC
5V
1
MOSI
NC
RST
SCK
MISO
10
10 PIN ISP
RIBBON
CONNECTOR
(TOP VIEW)
VCC
C2
10uf
R3
10K
AT89S52
(TOP VIEW)
P1.0 1
P1.1 2
P1.2 3
P1.3 4
P1.4 5
P1.5 6
P1.6 7
P1.7 8
RST 9
P3.0 10
P3.1 11
P3.2 12
P3.3 13
P3.4 14
P3.5 15
P3.6 16
P3.7 17
XT1 18
XT2 19
GND 20
40 VCC
39 P0.0
38 P0.1
37 P0.2
36 P0.3
35 P0.4
34 P0.5
33 P0.6
32 P0.7
31 /EA
30 ALE
29 PSN
28 P2.7
27 P2.6
26 P2.5
25 P2.4
24 P2.3
23 P2.2
22 P2.1
21 P2.0
VCC
10K x 8
PORT 0 PULL-UP RESISTORS
VCC
VCC
0.1
ADDED
BYPASS
CAP
VCC VCC
+
-
CONVENIENCE
VCC /GND
TERMINALS
VCC
POWER
INDICATOR
1.5K
12mHZ
C3
22pf
C23
22pf
AT89S52 MINIMUM DEVELOPMENT BOARD