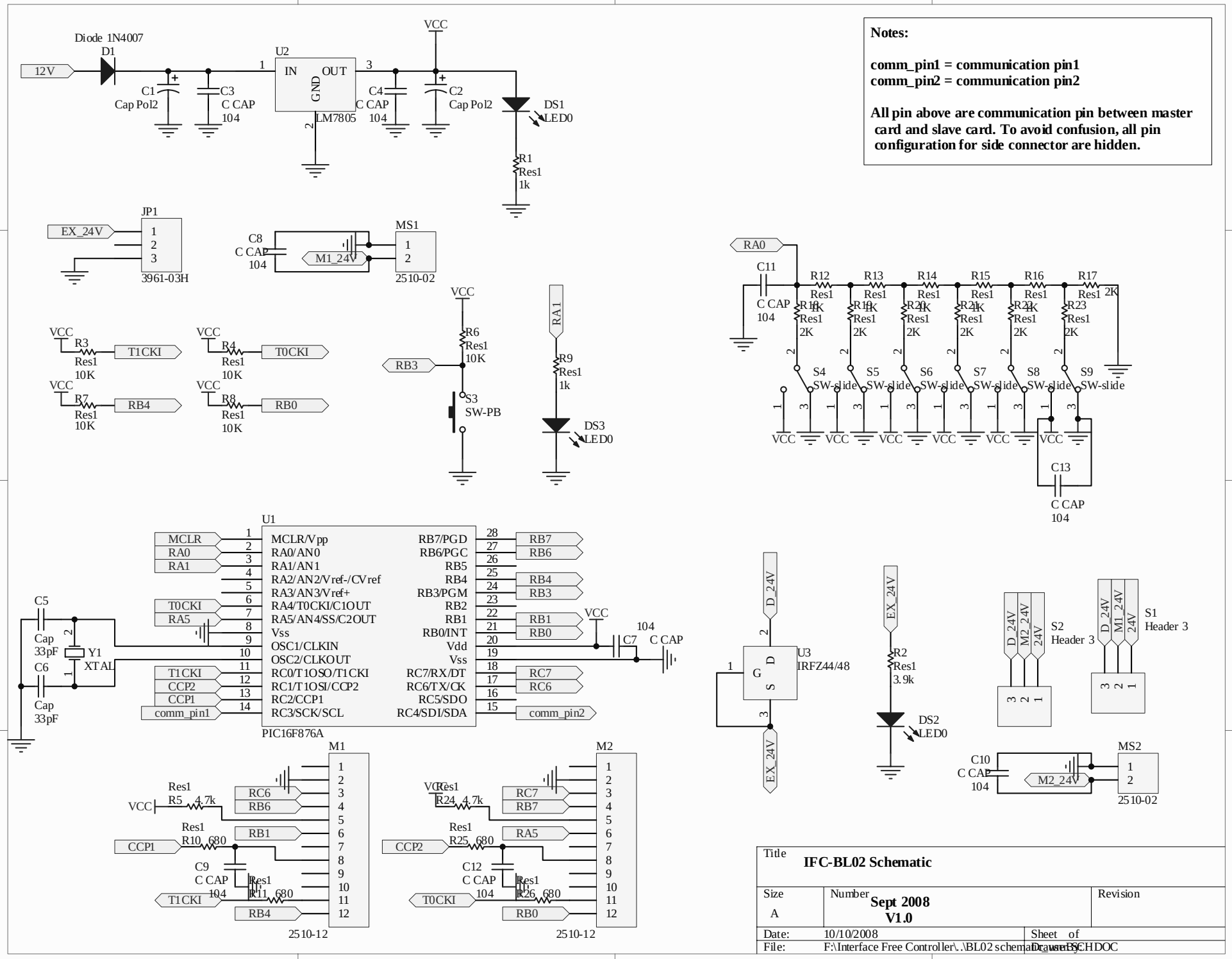

Title	IFC-BL02 Schematic	
Size A	Number Sept 2008 V1.0	Revision
Date: 10/10/2008		Sheet of
File: F:\Interface Free Controller\..\BL02 schematic.SCHDOC		Drawn By: