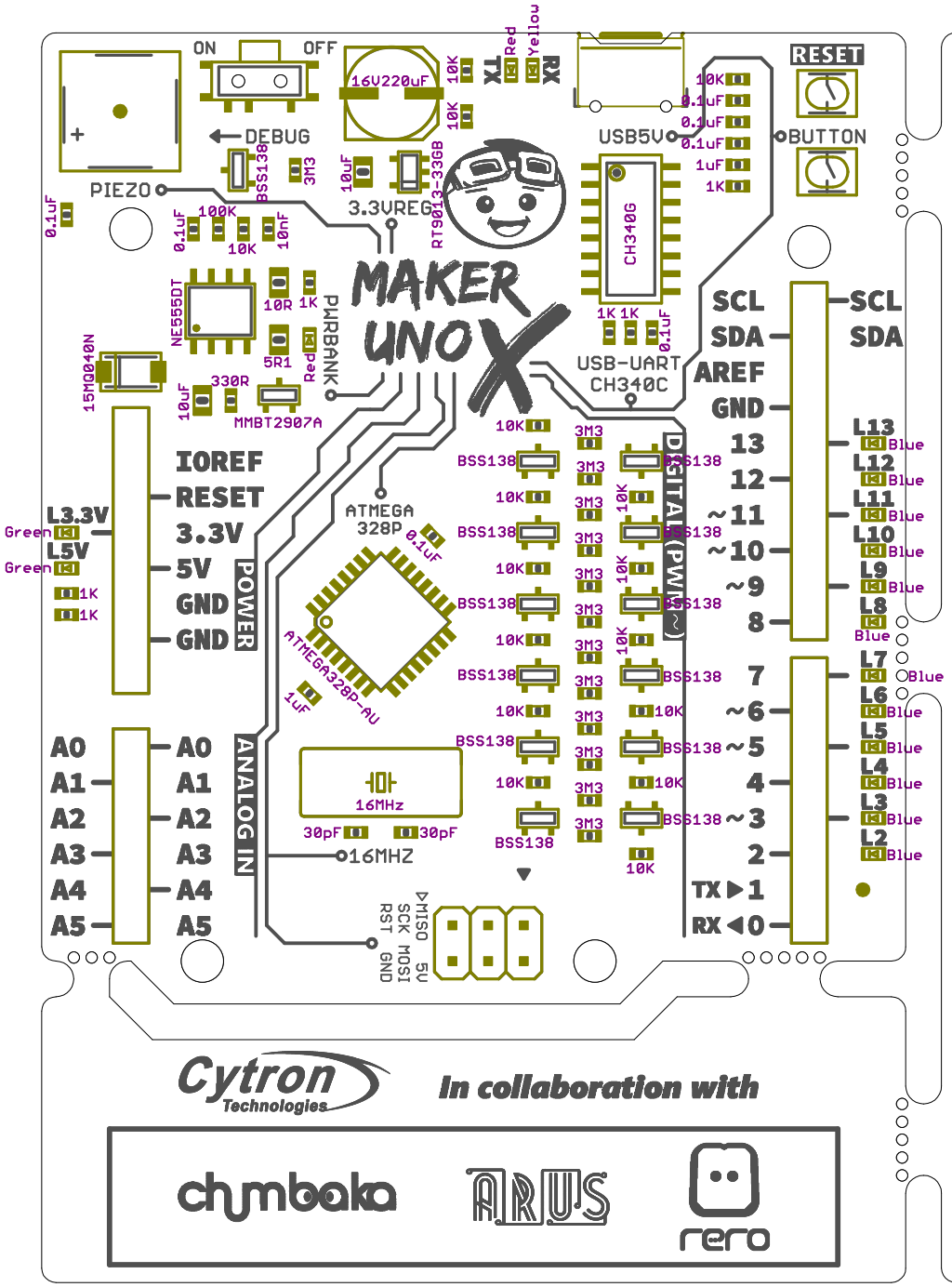
MAKER UNO X
ON
OFF
DEBUG
PIEZO
16V220uF
3.3VREG
RT9013-33GB
USB5V
CH340G
USB-UART
CH340C
RESET
BUTTON
NE555DT
PWRBANK
MMBT2907A
15MQ040N
ATMEGA 328P
ATMEGA328P-AU
16MHz
16MHZ
IOREF
RESET
3.3V
5V
GND
GND
POWER
L3.3V
L5V
A0
A1
A2
A3
A4
A5
ANALOG IN
SCL
SDA
AREF
GND
13
12
~11
~10
~9
8
7
~6
~5
4
~3
2
TX ▶1
RX ◀0
DIGITAL (PWM~)
MISO
SCK
RST
5V
MOSI
GND
TX
RX
Red
Yellow
Green
Blue
In collaboration with
chumbaka
ARUS
rero

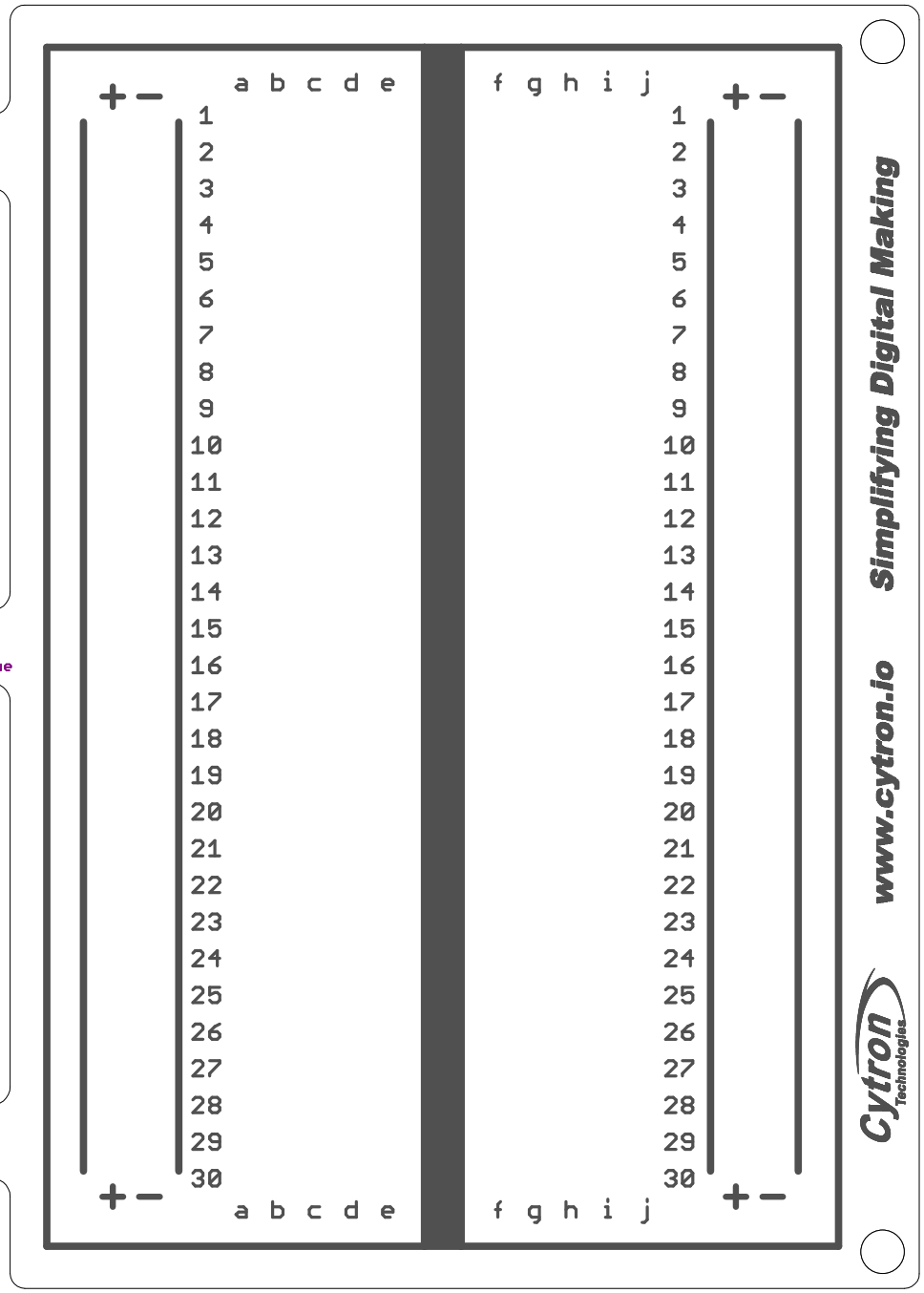
a b c d e
f g h i j
1 2 3 4 5 6 7 8 9 10 11 12 13 14 15 16 17 18 19 20 21 22 23 24 25 26 27 28 29 30
Simplifying Digital Making
www.cytron.io
Cytron Technologies