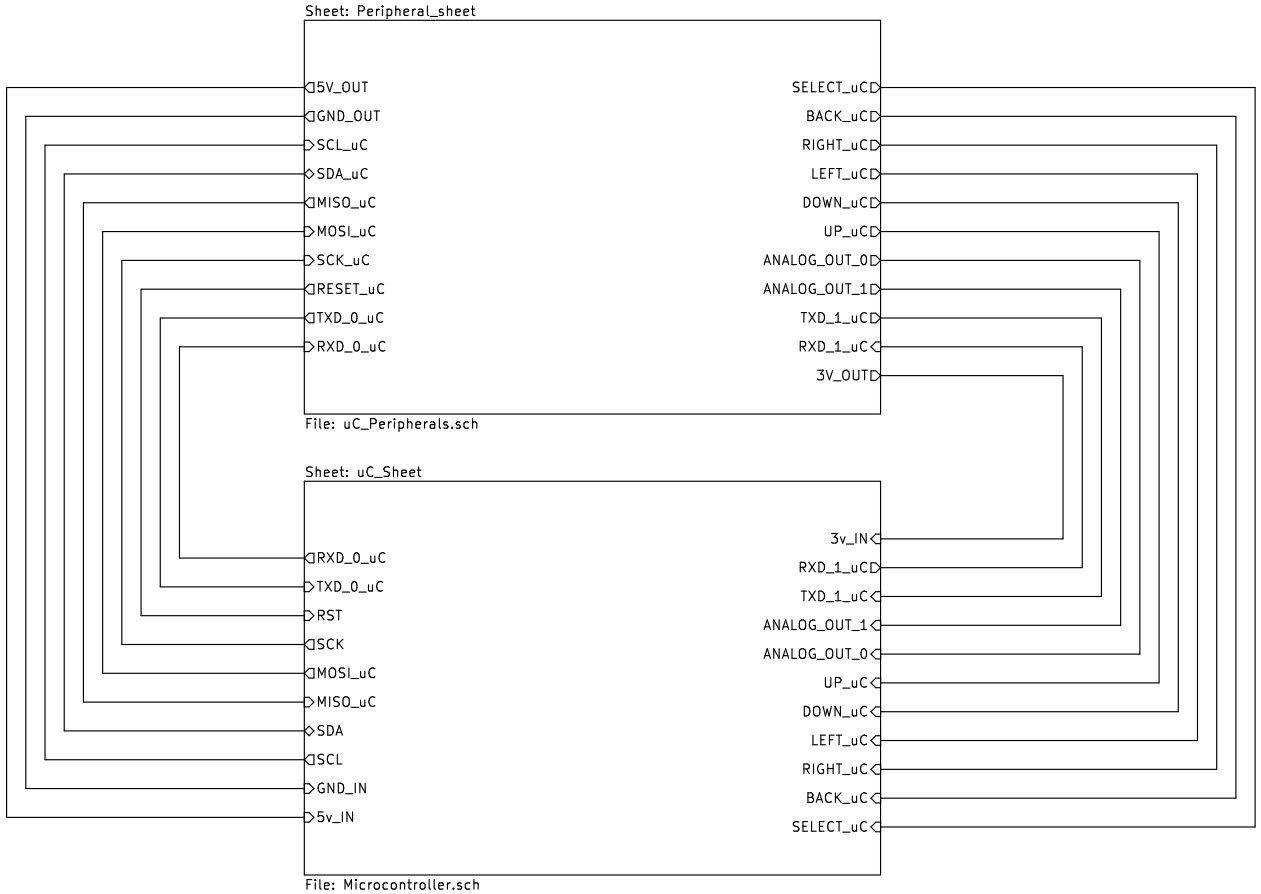

H1 MountingHole
H2 MountingHole
H3 MountingHole
H4 MountingHole

Sheet: /
File: SPVMD_V2.0.sch

Title:

Size: A4	Date:	**Rev:**
KiCad E.D.A. kicad (5.1.10)-1		Id: 1/3

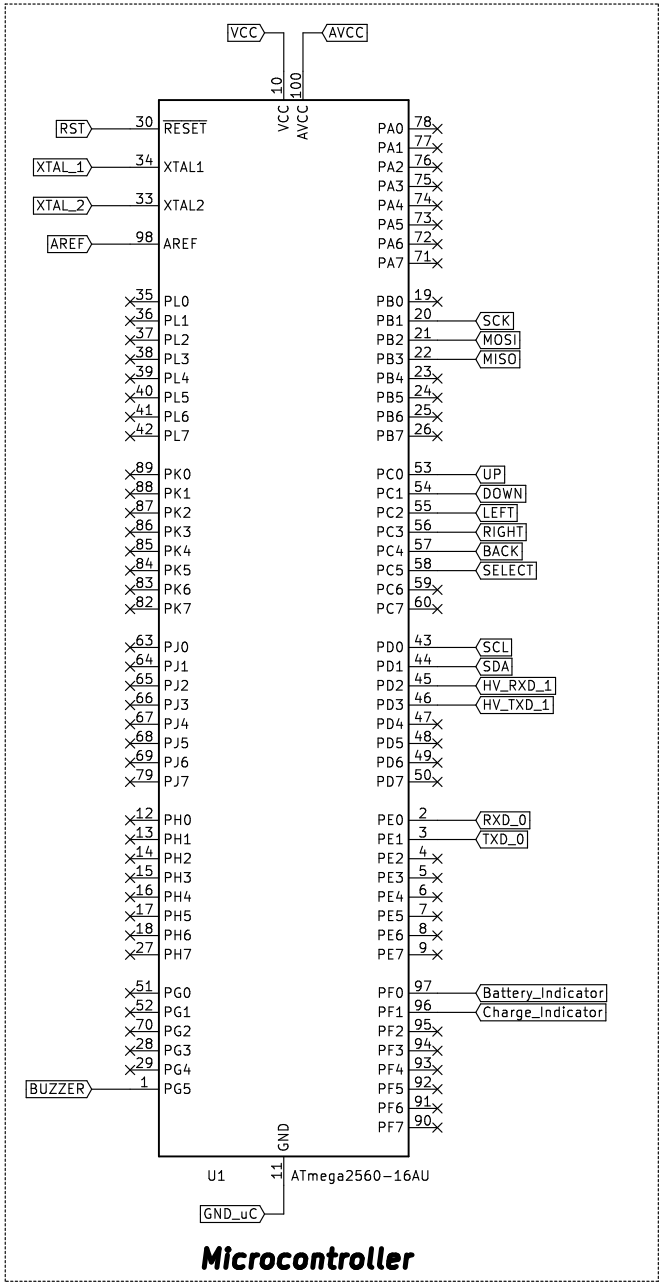

Microcontroller

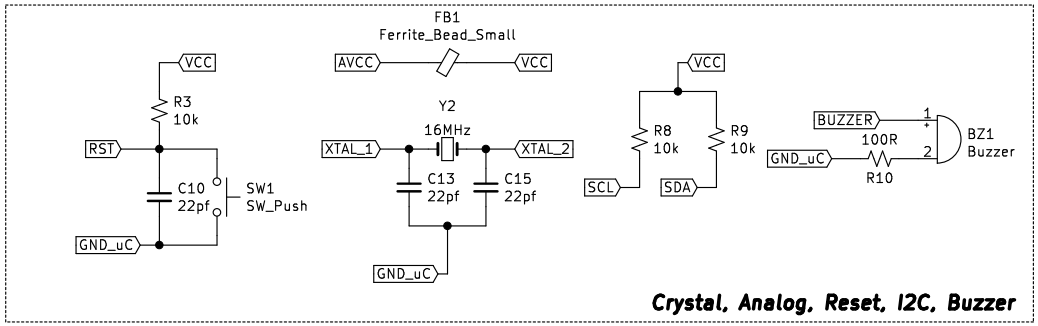

Crystal, Analog, Reset, I2C, Buzzer

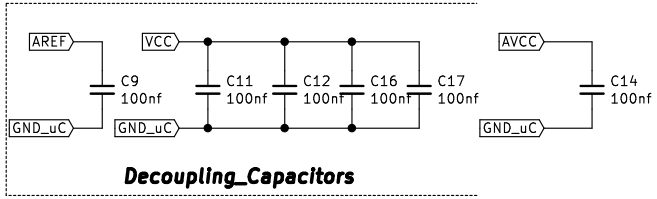

Decoupling_Capacitors

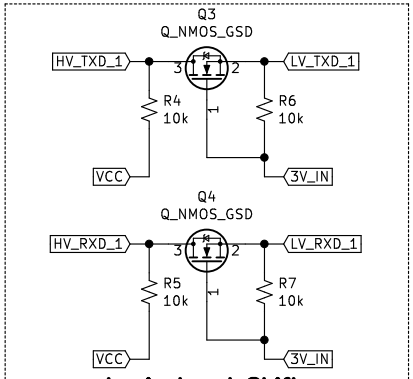

Logic_Level_Shifter

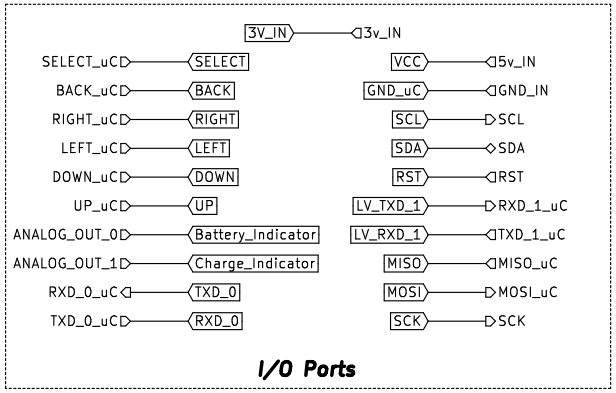

I/O Ports

Vashishtha Research

Sheet: /uC_Sheet/

File: Microcontroller.sch

Title: Stockpile device board

Size: A4	Date:	Rev:
KiCad E.D.A. kicad (5.1.10)-1		Id: 2/3

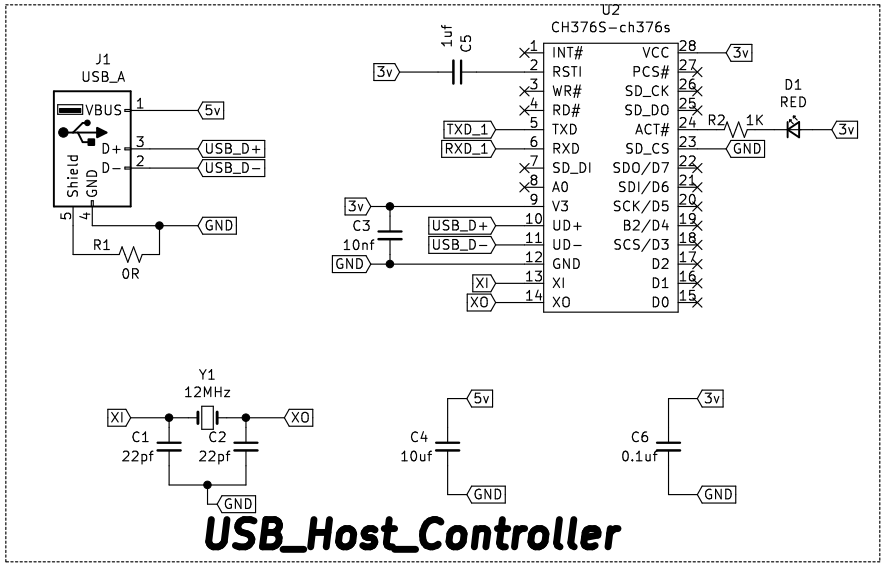

USB_Host_Controller

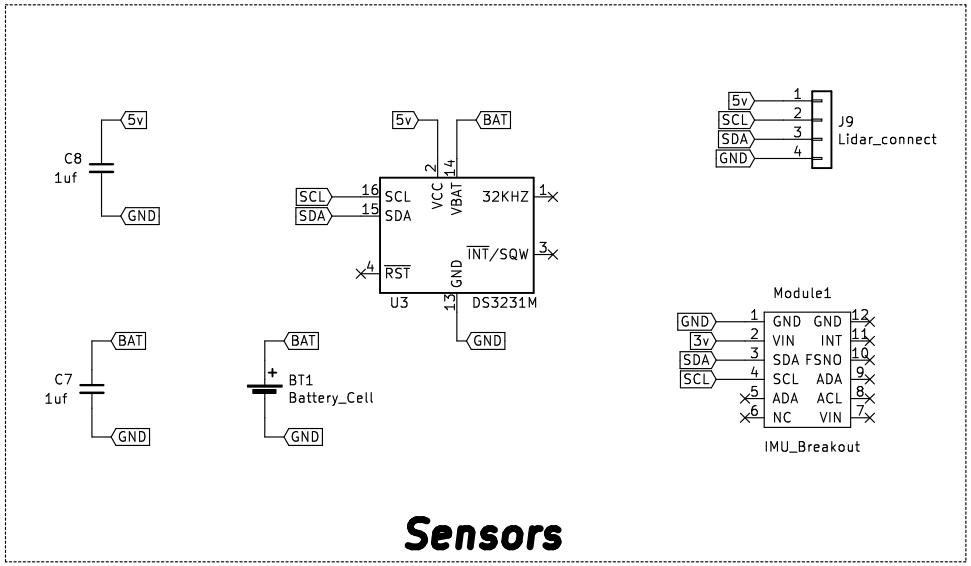

Sensors

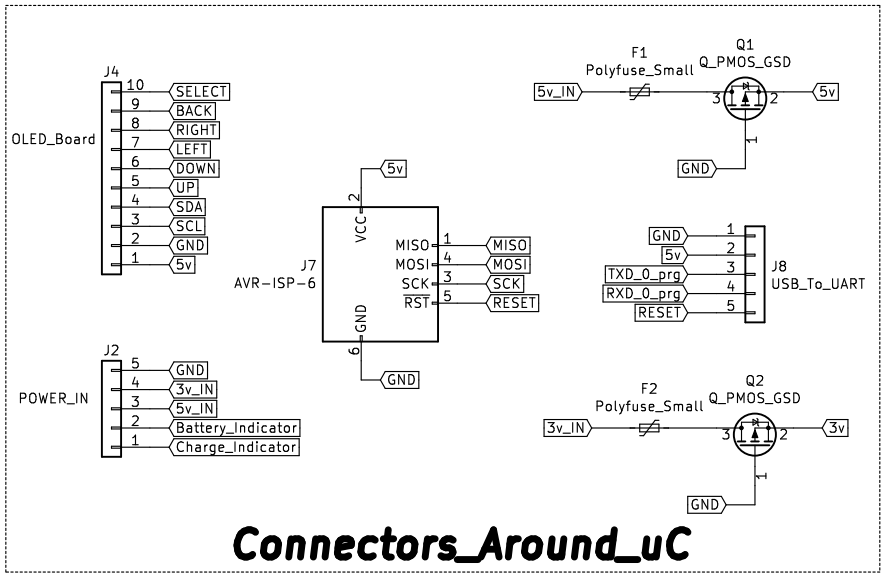

Connectors_Around_uC

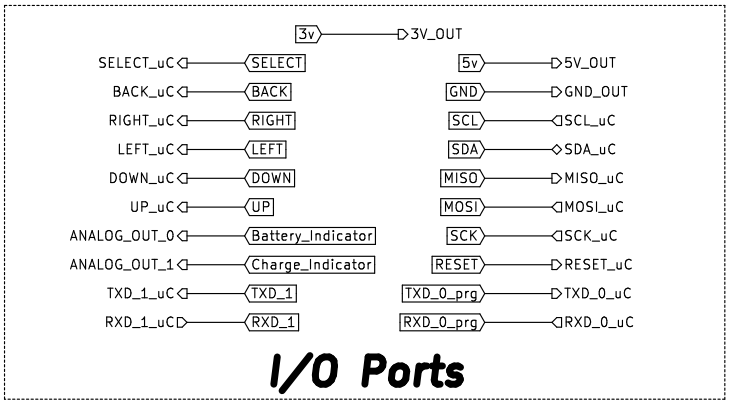

I/O Ports

Sheet: /Peripheral_sheet/
File: uC_Peripherals.sch

Title:

Size: A4	Date:	**Rev:**
KiCad E.D.A. kicad (5.1.10)−1		Id: 3/3