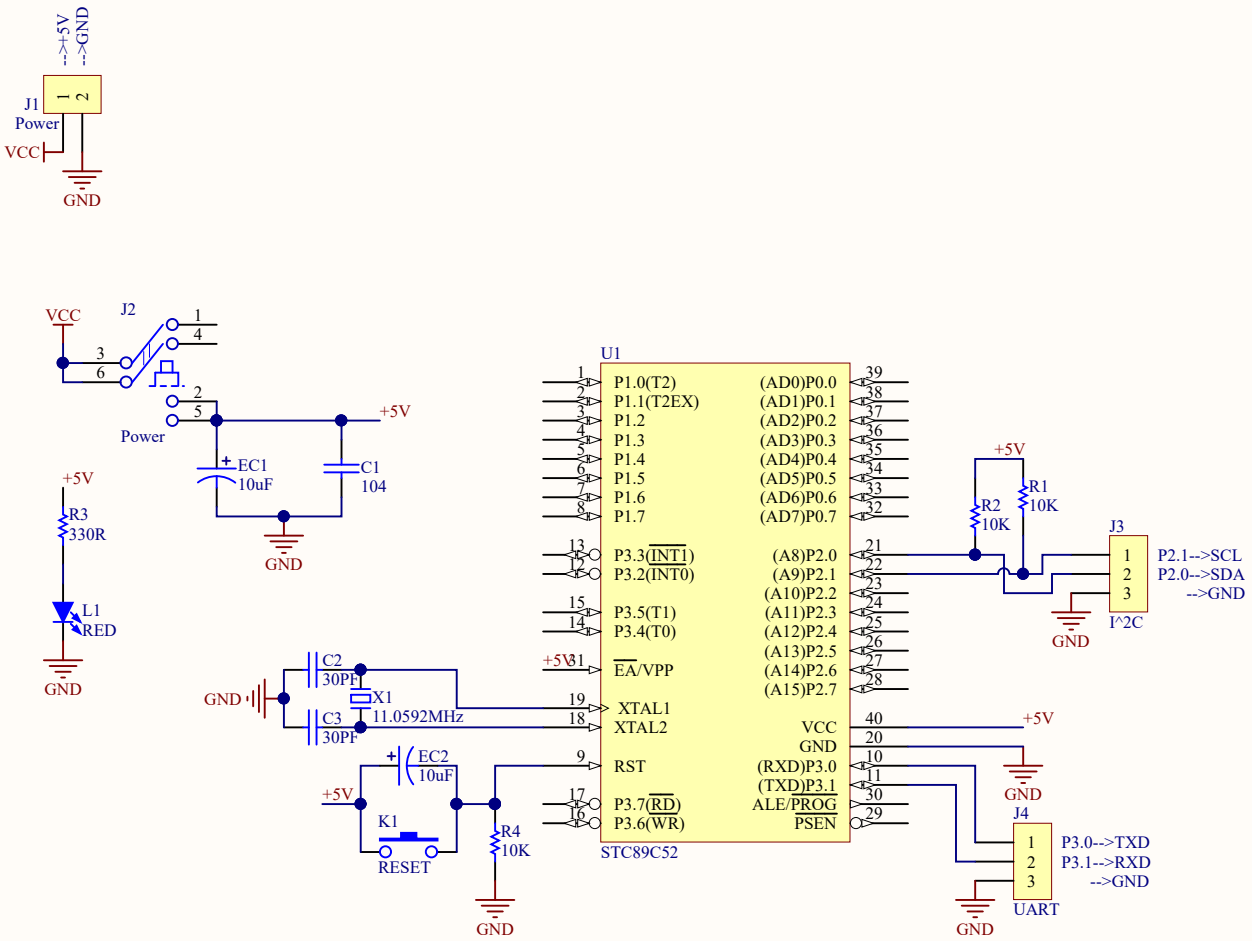

Title	89C52-PCM1792-I^2C(Vcc=5V)	
Size A4	Number 1	Revision V1.0
Date: 2020/10/1	Sheet 1 of 1	
File: E:\GEEK\..\PCM1792A_MainSche.SchDoc	Drawn By: DLHC	