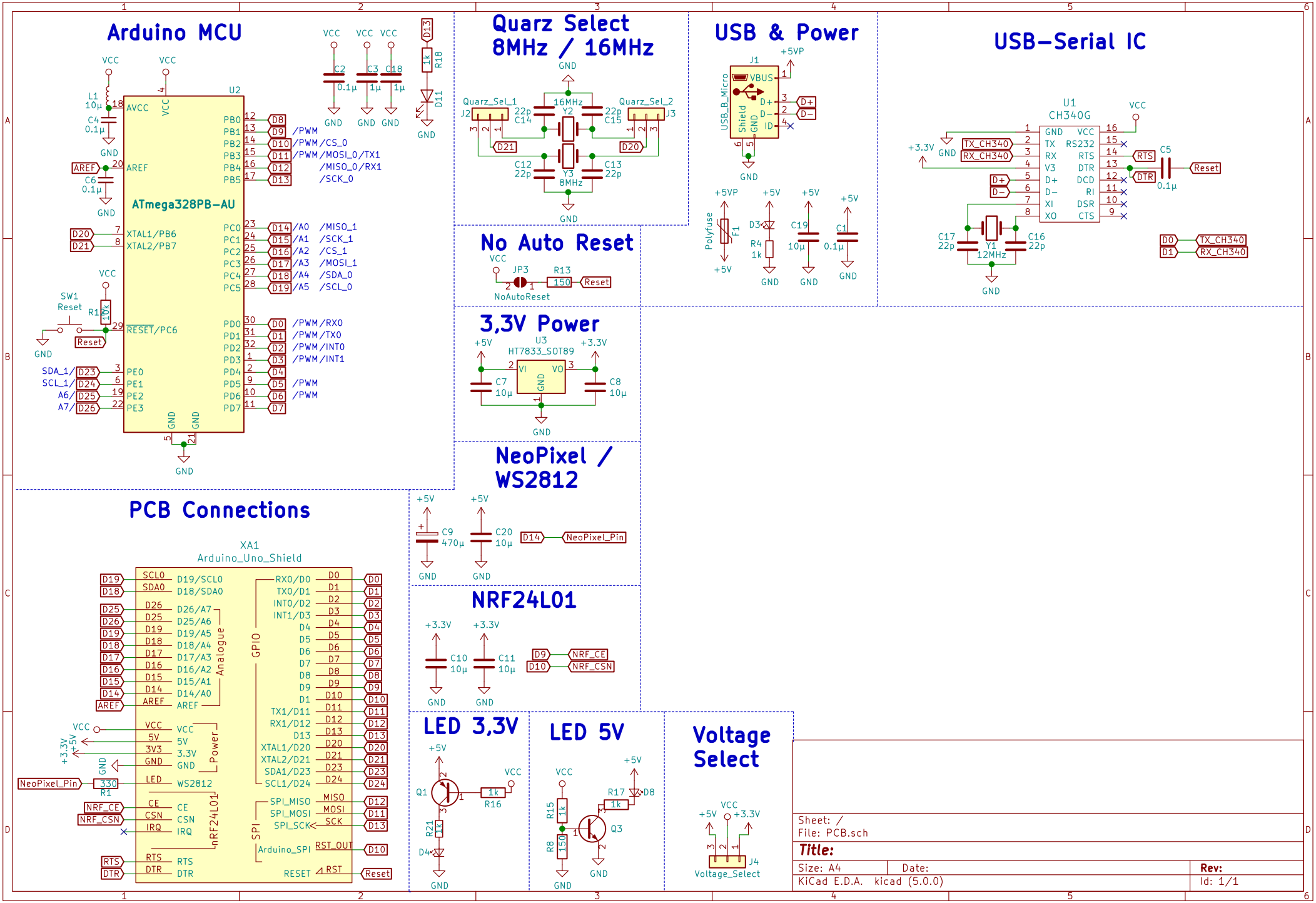
Arduino MCU
ATmega328PB-AU
U2
AVCC
AREF
XTAL1/PB6
XTAL2/PB7
RESET/PC6
PB0 PB1 PB2 PB3 PB4 PB5
PC0 PC1 PC2 PC3 PC4 PC5
PD0 PD1 PD2 PD3 PD4 PD5 PD6 PD7
PE0 PE1 PE2 PE3
/PWM
/PWM /CS_0
/PWM /MOSI_0/TX1
/MISO_0/RX1
/SCK_0
/A0 /MISO_1
/A1 /SCK_1
/A2 /CS_1
/A3 /MOSI_1
/A4 /SDA_0
/A5 /SCL_0
/PWM /RX0
/PWM /TX0
/PWM /INT0
/PWM /INT1
/PWM
/PWM
SDA_1/ SCL_1/ A6/ A7/
SW1 Reset
L1 10µ
C4 0.1µ
C6 0.1µ
R1 10k
C2 0.1µ
C3 1µ
C18 1µ
R18 1k
D11
Quarz Select 8MHz / 16MHz
Quarz_Sel_1
Quarz_Sel_2
J2
J3
16MHz Y2
Y3 8MHz
C14 22p
C15 22p
C12 22p
C13 22p
No Auto Reset
JP3 NoAutoReset
R13 150
3,3V Power
U3 HT7833_SOT89
C7 10µ
C8 10µ
NeoPixel / WS2812
C9 470µ
C20 10µ
NeoPixel_Pin
NRF24L01
C10 10µ
C11 10µ
NRF_CE
NRF_CSN
USB & Power
J1
USB_B_Micro
VBUS
D+
D-
ID
Shield
Polyfuse F1
D3
R4 1k
C19 10µ
C1 0.1µ
USB-Serial IC
U1 CH340G
GND VCC
TX RS232
RX RTS
V3 DTR
D+ DCD
D- RI
XI DSR
XO CTS
TX_CH340
RX_CH340
RTS
DTR
C5 0.1µ
Reset
C17 22p
C16 22p
Y1 12MHz
PCB Connections
XA1
Arduino_Uno_Shield
SCL0 D19/SCL0
SDA0 D18/SDA0
D26/A7
D25/A6
D19/A5
D18/A4
D17/A3
D16/A2
D15/A1
D14/A0
AREF
Analogue
GPIO
VCC
5V
3V3
GND
LED
Power
NeoPixel_Pin
R1 330
WS2812
CE
CSN
IRQ
nRF24L01
RTS
DTR
RX0/D0
TX0/D1
INT0/D2
INT1/D3
TX1/D11
RX1/D12
XTAL1/D20
XTAL2/D21
SDA1/D23
SCL1/D24
SPI_MISO
SPI_MOSI
SPI_SCK
SPI
Arduino_SPI
RST_OUT
RESET
LED 3,3V
Q1
R16 1k
R21 1k
D4
LED 5V
R15 1k
R8 150
R17 1k
D8
Q3
Voltage Select
J4
Voltage_Select
Sheet: /
File: PCB.sch
Title:
Size: A4
Date:
Rev:
KiCad E.D.A. kicad (5.0.0)
Id: 1/1