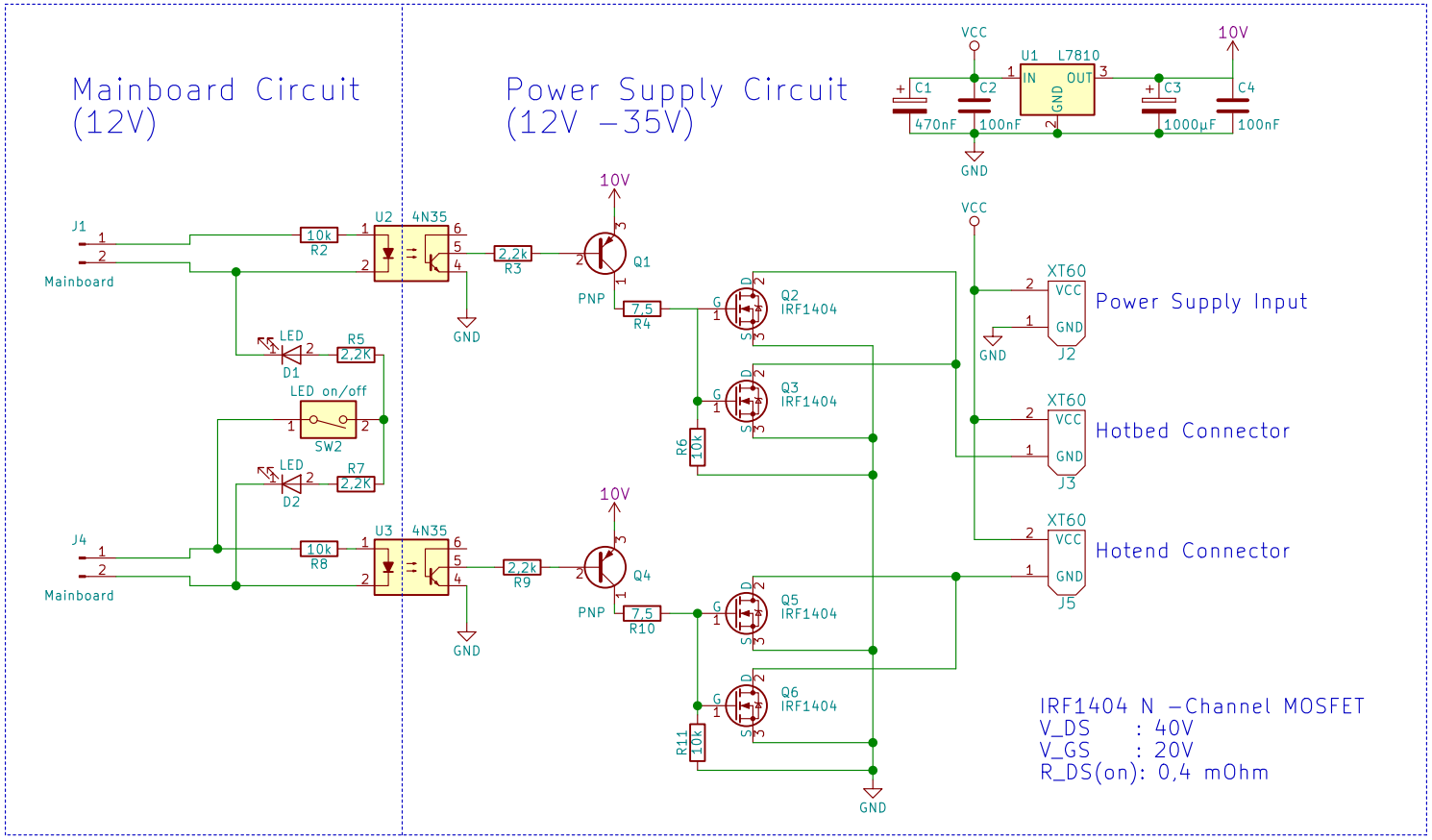

Mosfet Protection for Hotbet and Hotend
for Hotend and hotbed there are 1 Mosfet + 1 backup Mosfet for each

SW1 turn on/off signal leds

Sheet: /
File: MosfetSchaltung_v1.1.sch

Title: Double Mosfet Protection for 3D Printing

Size: A4	Date: 2018-01-03	**Rev: 1.0**
KiCad E.D.A. kicad 4.0.7		Id: 1/1