The printed / exported Document 55090-440800-520-0001_1231 out of AIMS is considered uncontrolled.

RELAIS INSTANTANE INSTANTANEOUS RELAY	BOUTON POUSSOIR CONTACT A FERMETURE PUSH BUTTON CONTACT NORMALLY OPENED
RELAIS TEMPORISE AU TRAVAIL TIME DELAY RELAY ON ENERGISATION	BOUTON POUSSOIR CONTACT A OUVERTURE PUSH BUTTON CONTACT NORMALLY CLOSED
RELAIS TEMPORISE AU REPOS TIME DELAY RELAY ON DE-ENERGISATION	COMMUTATEUR CONTACT A FERMETURE SWITCH CONTACT NORMALLY OPENED
CONTACT A FERMETURE INSTANTANEE INSTANTANEOUS CONTACT NORMALLY OPENED	COMMUTATEUR CONTACT A OUVERTURE SWITCH CONTACT NORMALLY CLOSED
CONTACT A OUVERTURE INSTANTANEE INSTANTANEOUS CONTACT NORMALLY CLOSED	BOUTON POUSSOIR "ARRET URGENCE" CONTACT A OUVERTURE EMERGENCY STOP PUSH BUTTON CONTACT NORMALLY CLOSED
CONTACT A OUVERTURE TEMPORISE A LA RETOMBEE TIME DELAY CONTACT ON DE-ENERGISATION NORMALLY CLOSED	CONTACT A FERMETURE ACTIONNE PAR LA PRESSION CONTACT ACTIVED BY PRESSURE CONTACT NORMALLY OPENED
CONTACT A FERMETURE TEMPORISE A LA RETOMBEE TIME DELAY CONTACT ON DE-ENERGISATION NORMALLY OPENED	CONTACT A OUVERTURE ACTIONNE PAR LA TEMPERATURE CONTACT ACTIVED BY TEMPERATURE CONTACT NORMALLY CLOSED
CONTACT A OUVERTURE RETARDEE TIME DELAY CONTACT ON ENERGISATION NORMALLY CLOSED	CONTACT DE NIVEAU A FERMETURE INSTANTANEE LEVEL CONTACT CONTACT NORMALLY OPENED
CONTACT A FERMETURE RETARDEE TIME DELAY CONTACT ON ENERGISATION NORMALLY OPENED	CONTACT DE NIVEAU A OUVERTURE INSTANTANEE LEVEL CONTACT CONTACT NORMALLY CLOSED
DIODE DIOD	FUSIBLE FUSE
CIRCUIT RC RESISTOR-CAPACITOR CIRCUIT	AVERTISSEUR SONORE HORN
DISJONCTEUR CIRCUIT BREAKER	TRANSFORMATEUR DE COURANT CURRENT TRANSFORMER

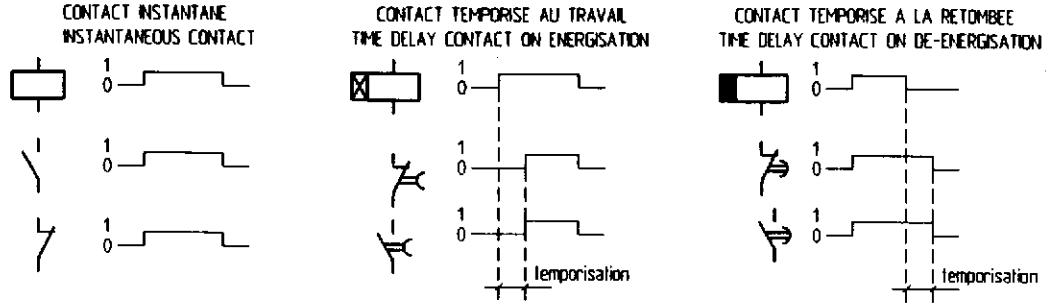

REPERE DE FIL

LE REPERE DE FIL EST COMPOSE DU NUMERO DE FOLIO ET DU NUMERO DE FIL SUR LE FOLIO.

EXEMPLE: 0512
05 EST LE NUMERO DE FOLIO.
12 EST LE NUMERO DE FIL SUR LE FOLIO.

REPERE DE MATERIEL

LE REPERE EST COMPOSE DU NUMERO DE FOLIO, D'UNE OU PLUSIEURS LETTRES ET D'UN CHIFFRE.

EXEMPLE: 07K2
07 EST LE NUMERO DE FOLIO.
K INDIQUE QUE LE MATERIEL EST UN RELAIS.
2 EST LE NUMERO DE RELAIS SUR LE FOLIO.

LETTRES UTILISEES

KM - CONTACTEUR
K - RELAIS
Q - DISJONCTEUR
F - FUSIBLE
P - APPAREL DE MESURE
S - BOUTON POUSSOIR, COMMUTATEUR

REPORT DE CONTACT

NC | NO
10-4

NC- CONTACT A OUVERTURE
NO- CONTACT A FERMETURE
10 EST LE NUMERO DE FOLIO
4 EST LE NUMERO DE COLONNE

LE SCHEMA EST REPRESENTE HORS TENSION

WIRE MARKING

MARK ON THE WIRE IS COMPOSED OFF SHEET NUMBER AND NUMBER OF WIRE IN THE SHEET

EXAMPLE: 0512
05 IS NUMBER OF THE SHEET
12 IS NUMBER OF THE WIRE IN THE SHEET

MATERIAL ITEM

MARK IS COMPOSED OF SHEET NUMBER, LETTER FOR MATERIAL IDENTIFICATION AND NUMBER OF MATERIAL IN THE SHEET.

EXAMPLE: 07K2
07 IS NUMBER OF THE SHEET.
K MEANS THAT MATERIAL IS RELAY.
2 MEANS THAT IT'S RELAY 2 OF THE SHEET.

LETTERS USED

KM - CONTACTOR
K - RELAY
Q - CIRCUIT BREAKER
F - FUSE
P - INDICATOR
S - PUSH BUTTON, SWITCH

REPORT OF CONTACT

NC | NO
10-4

NC- CONTACT NORMALLY CLOSED
NO- CONTACT NORMALLY OPENED
10 - IS NUMBER OF THE SHEET
4 -IS NUMBER OF COLUMN IN THE SHEET

ELECTRICAL DRAWING IS MADE WITHOUT VOLTAGE

0	1	2	3	4	5	6	7	8	9
WIRING LEGEND						CODE ARTICLE	CONTRAT	FICHIER	IDENTIFICATION
							345085	SYMBOLE	070-1013/2B

The printed / exported Document 55090-440800-520-0001_1231 out of AIMS is considered uncontrolled.

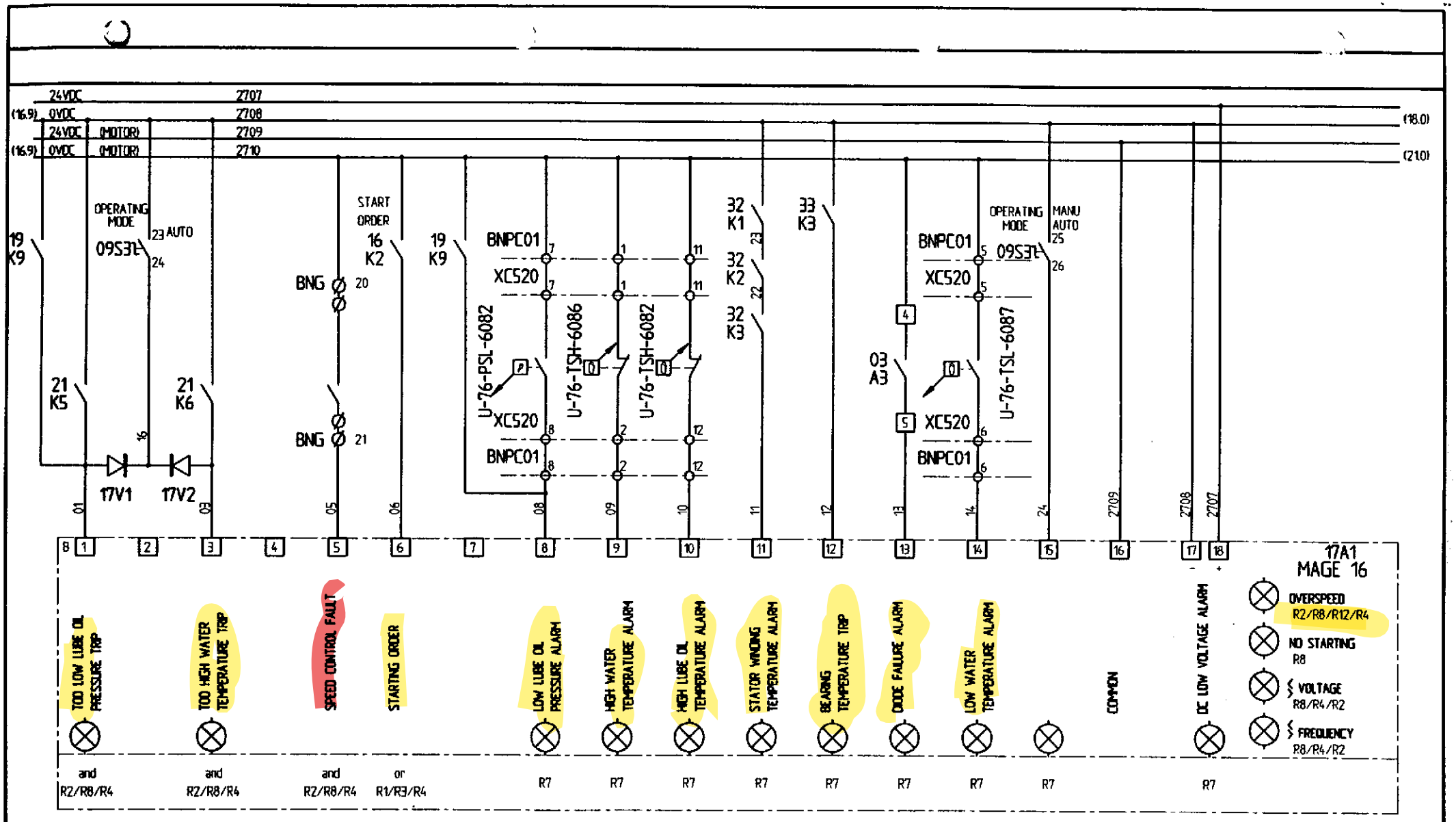

DERNIER REPERE :

0	1	2	3	4	5	6	7	8	9
GENERATOR PLC INPUTS						CODE ARTICLE	CONTRAT 345085	FICHER 00SC017E	IDENTIFICATION 070-1013/17

A B C D E

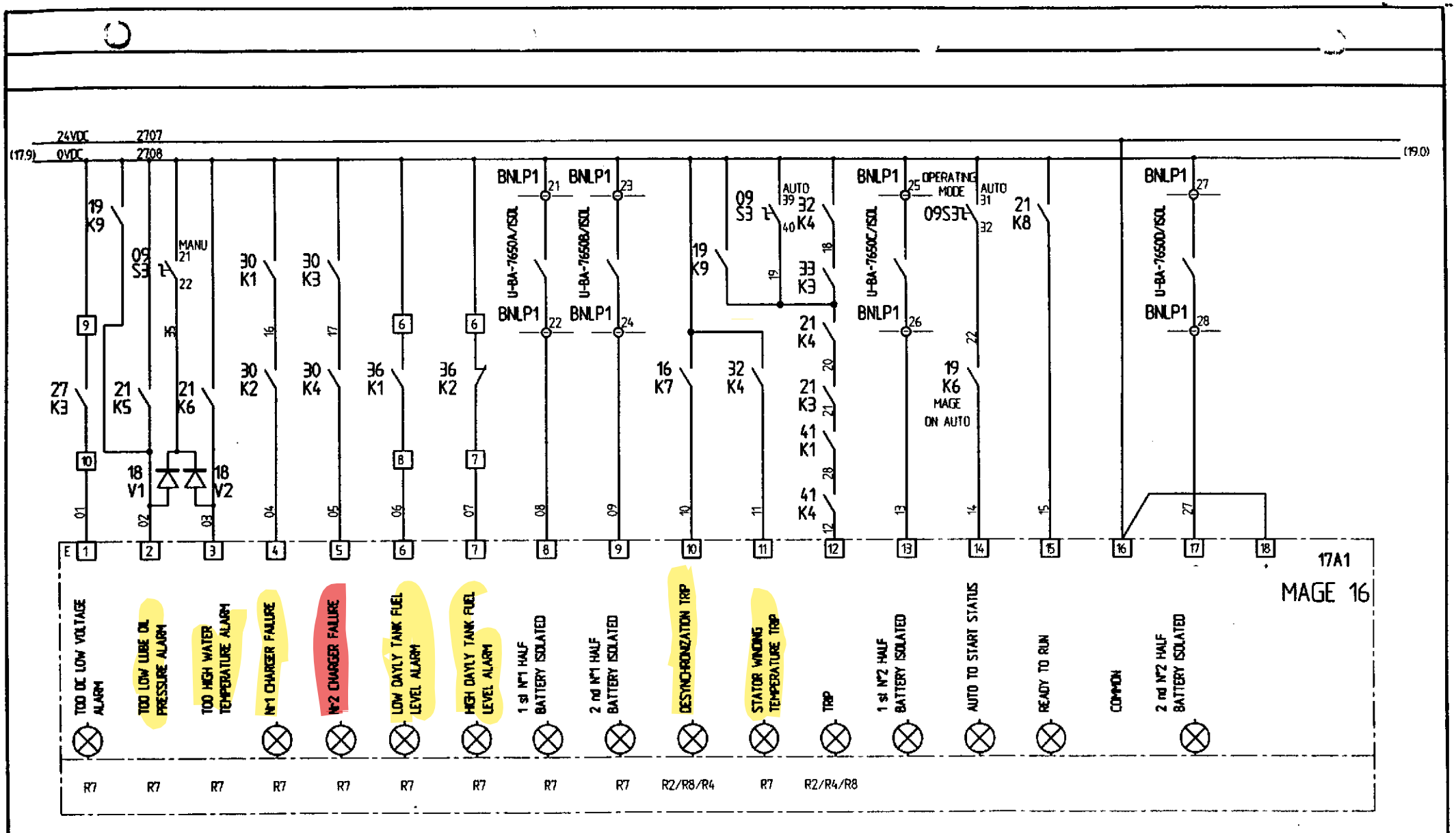

DERNIER REPERE :35

0	1	2	3	4	5	6	7	8	9
GENERATOR PLC INPUTS						CODE ARTICLE	CONTRAT 345085	FICHIER 00SC018E	IDENTIFICATION 070-1013/18

A	B	C	D
E			

The printed / exported Document 55090-440800-520-0001_1231 out of AIMS is considered uncontrolled.

The printed / exported Document 55090-440800-520-0001_1231 out of AIMS is considered uncontrolled.

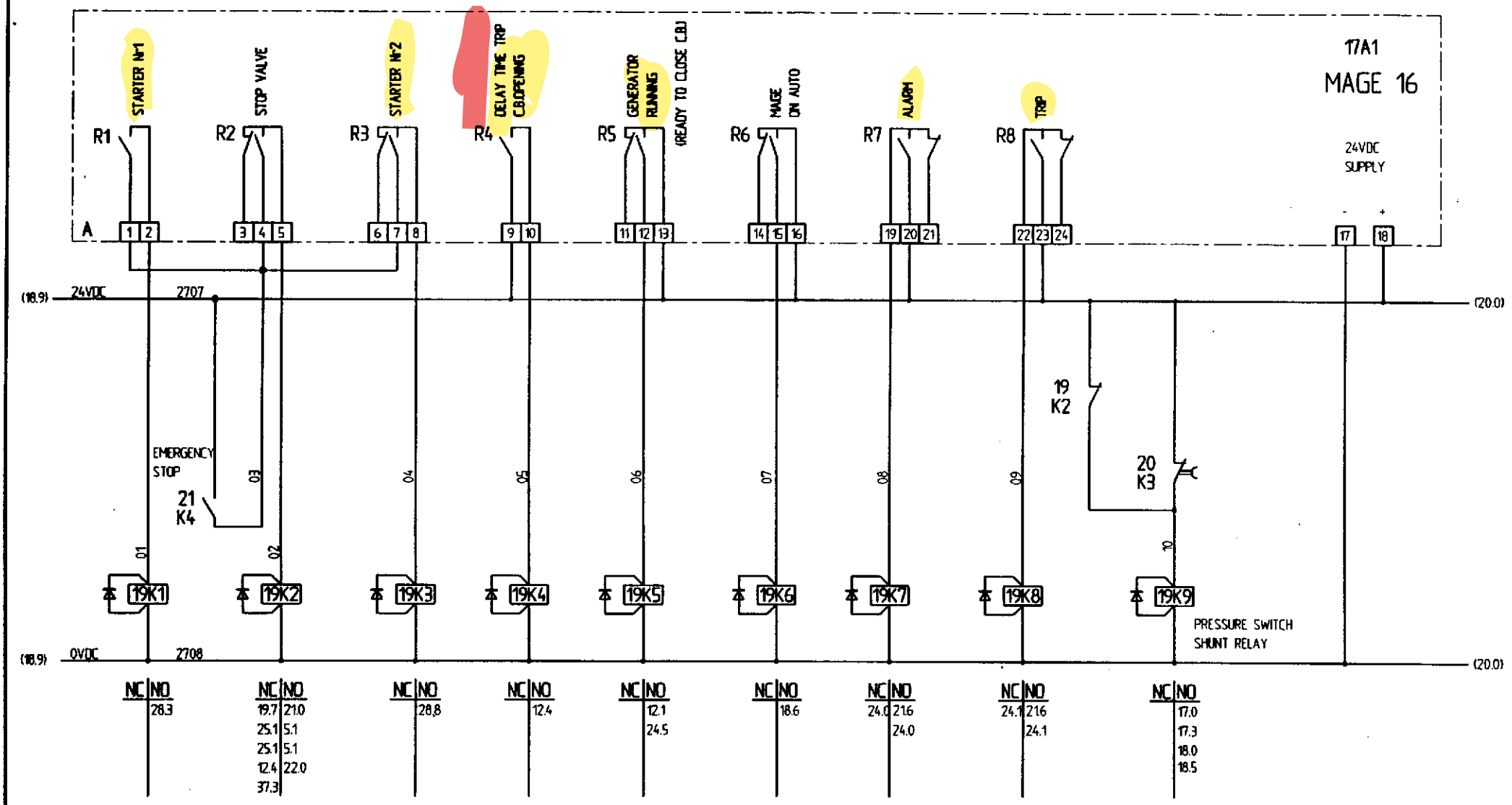

0	1	2	3	4	5	6	7	8	9
GENERATOR PLC OUTPUTS						CODE ARTICLE	CONTRAT 345085	FICHER 00SC019E	IDENTIFICATION 070-1013/19

A B C E

The printed / exported Document 55090-440800-520-0001_1231 out of AIMS is considered uncontrolled.

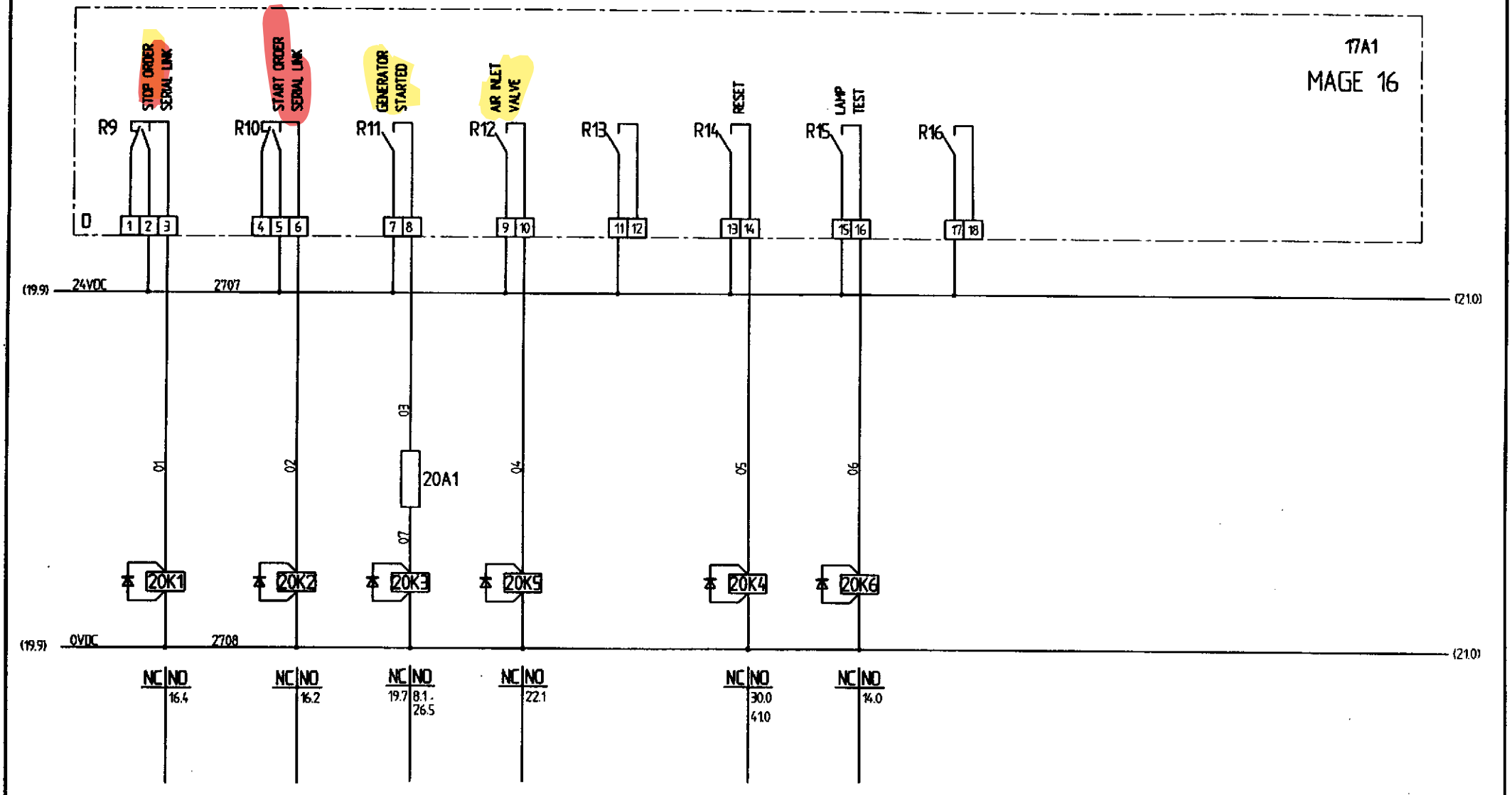

DERNIER REPERE :

0	1	2	3	4	5	6	7	8	9
GENERATOR PLC OUTPUTS						CODE ARTICLE	CONTRAT 345085	FICHIER 00SC020C	IDENTIFICATION 070-1013/20 A B C