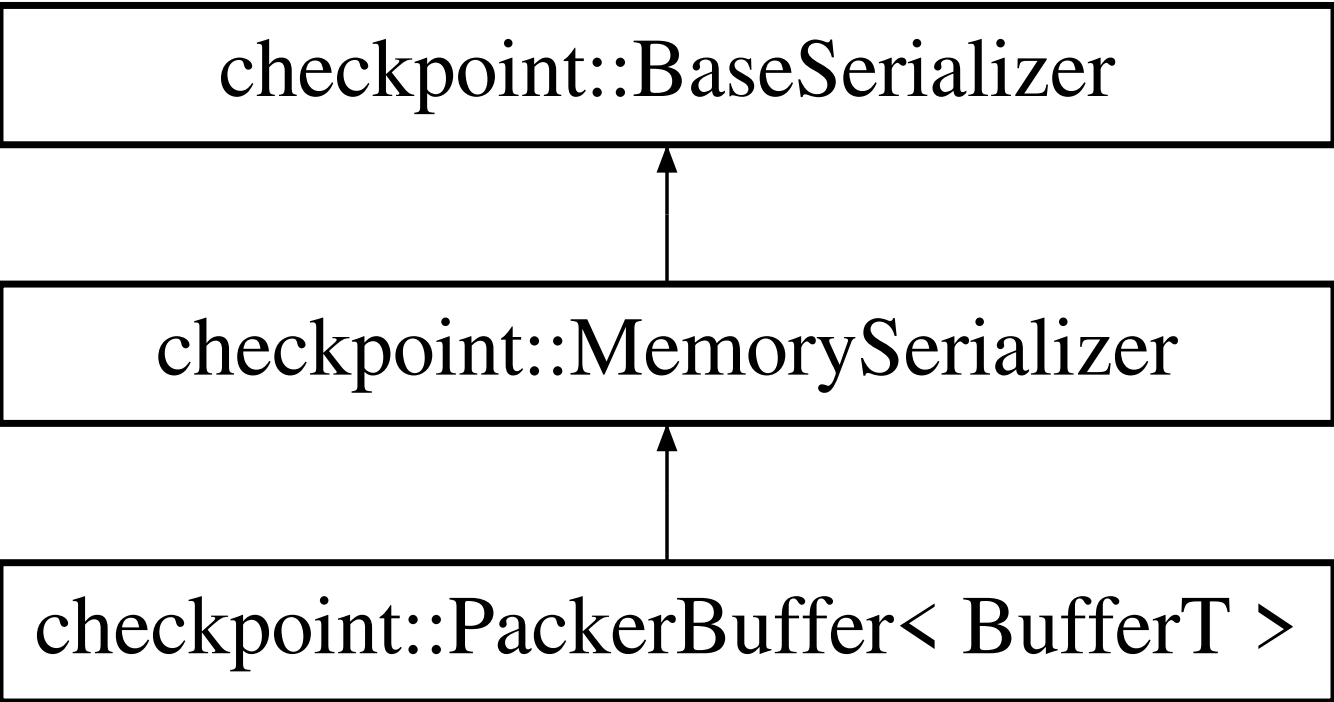
checkpoint::BaseSerializer
checkpoint::MemorySerializer
checkpoint::PackerBuffer< BufferT >