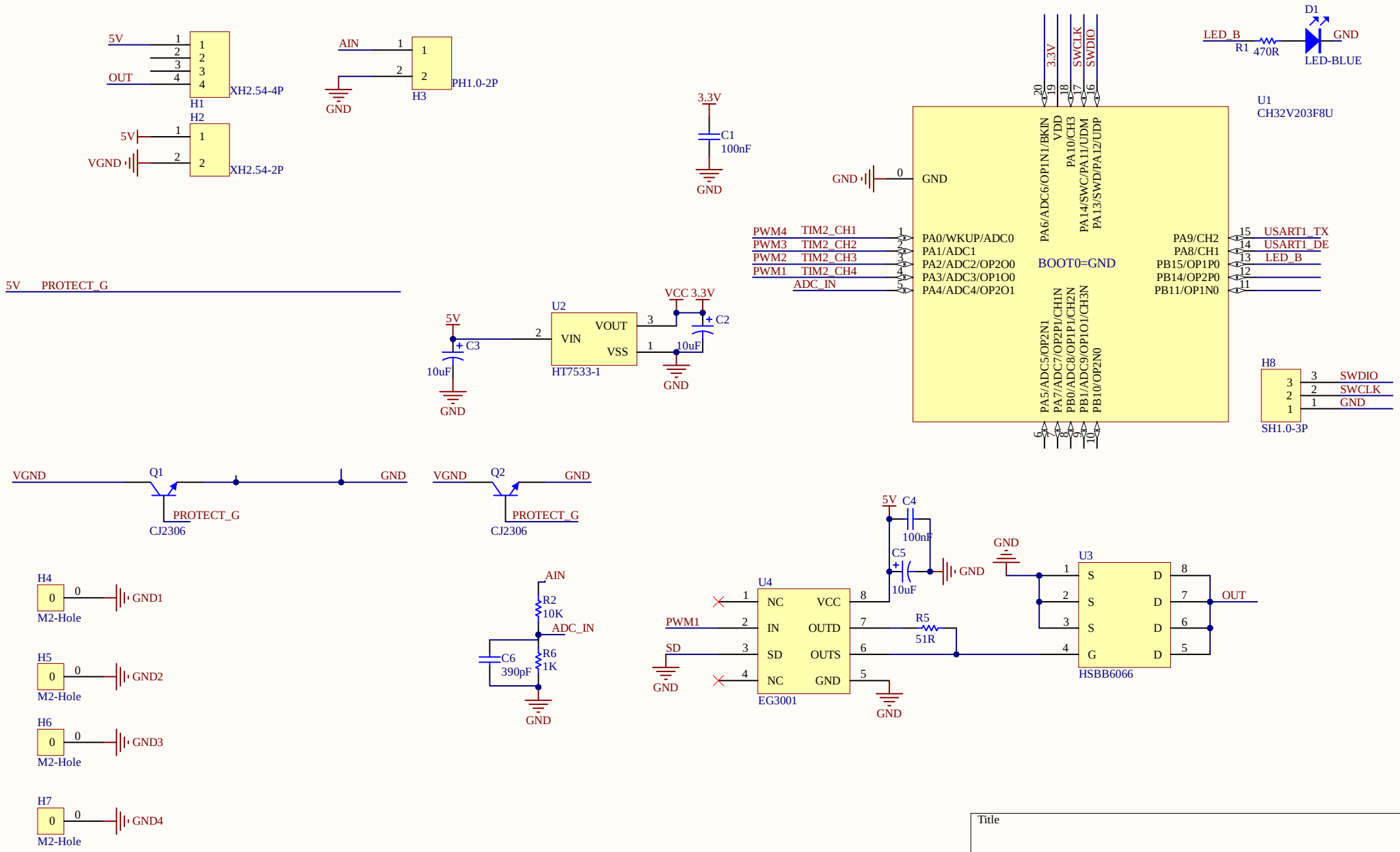

Title		
Size A4	Number	Revision
Date: 8/28/2025		Sheet of
File: C:\Users\..\A2PWM.SchDoc		Drawn By:

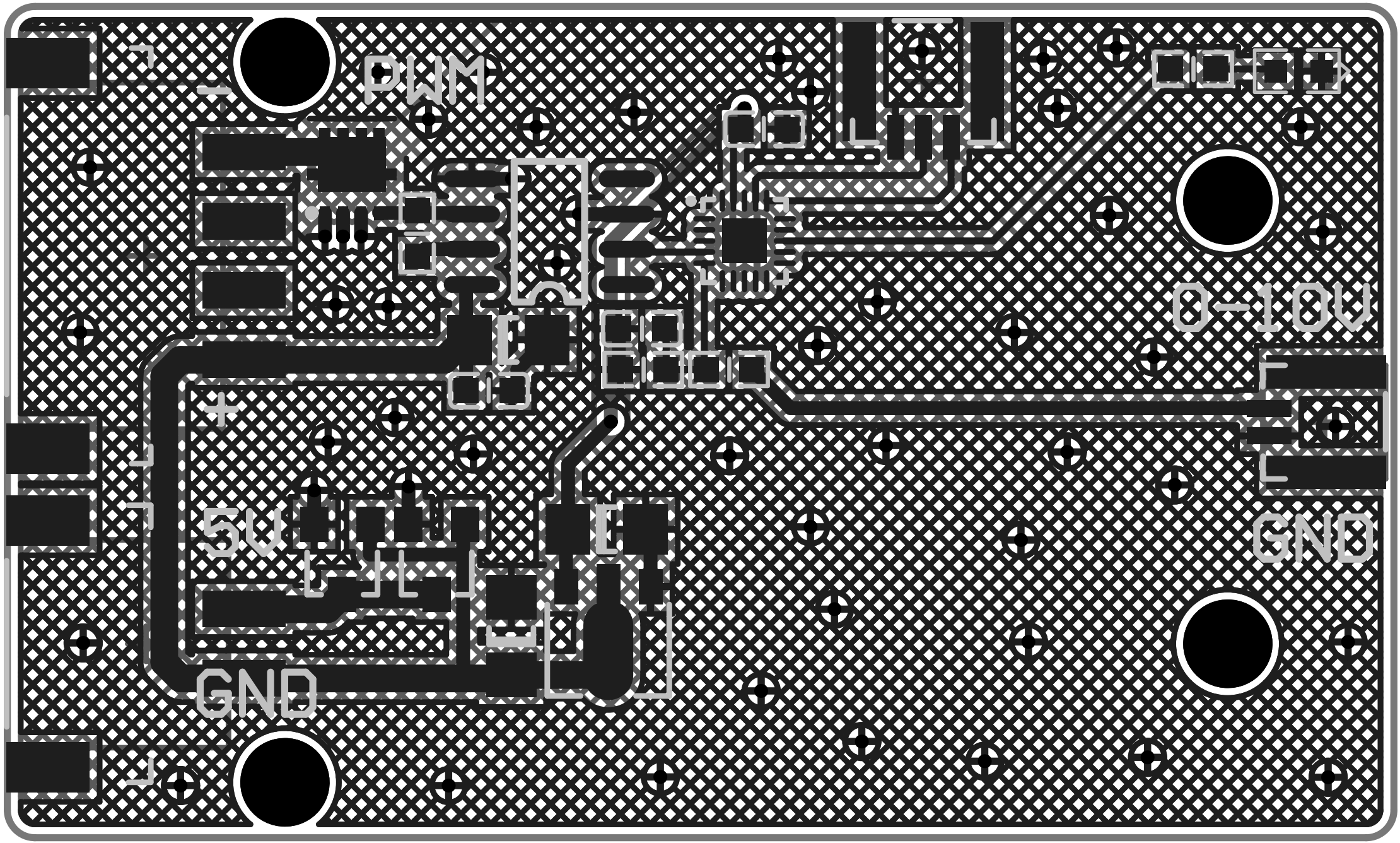
PWM
0-10V
5V
GND
GND