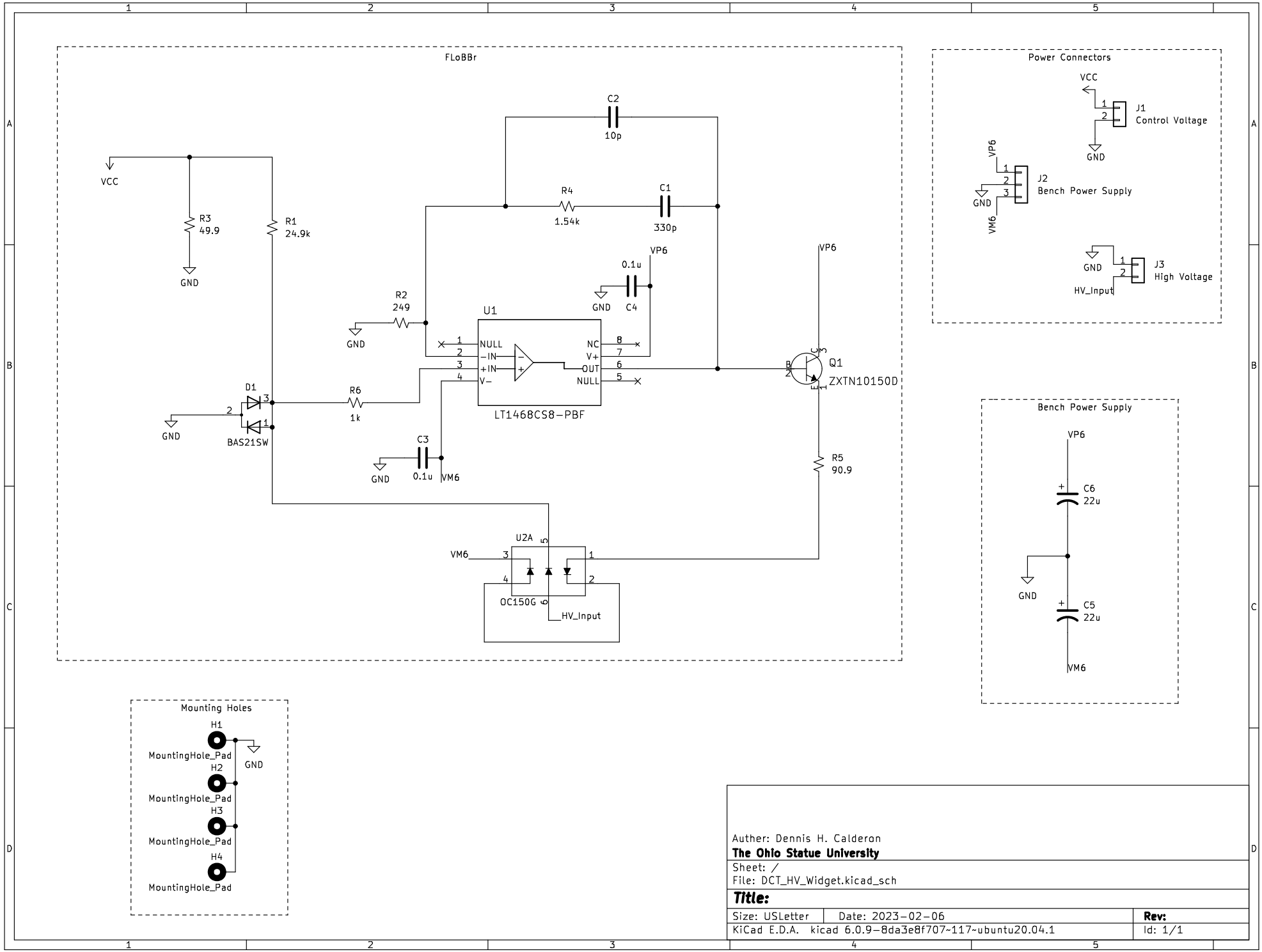

Auther: Dennis H. Calderon

The Ohio Statue University

Sheet: /

File: DCT_HV_Widget.kicad_sch

Title:

Size: USLetter	Date: 2023-02-06	**Rev:**
KiCad E.D.A. kicad 6.0.9-8da3e8f707~117~ubuntu20.04.1		Id: 1/1