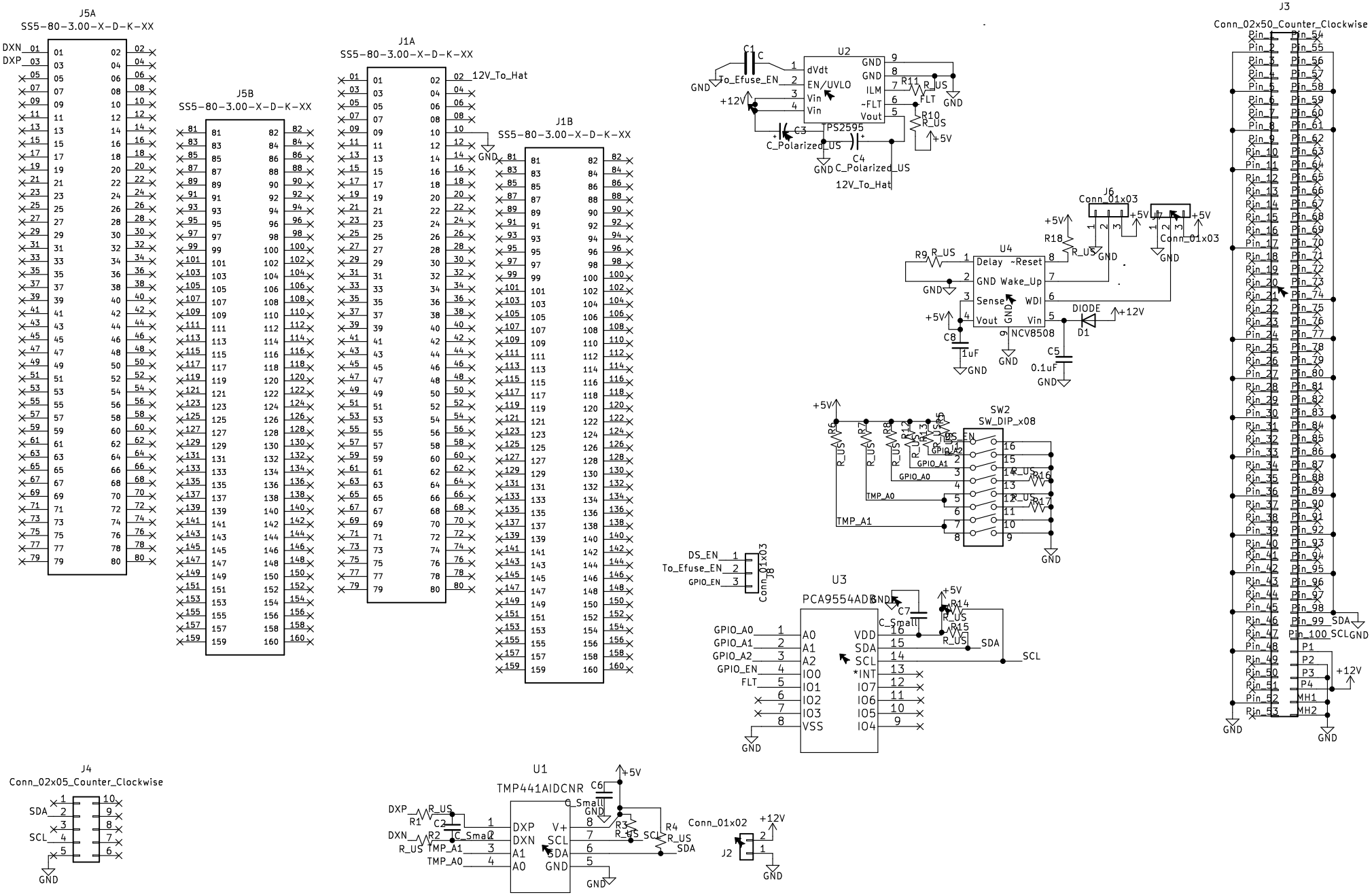
J5A
SS5-80-3.00-X-D-K-XX
DXN
DXP
J5B
SS5-80-3.00-X-D-K-XX
J1A
SS5-80-3.00-X-D-K-XX
12V_To_Hat
J1B
SS5-80-3.00-X-D-K-XX
GND
C1
C
To_Efuse_EN
+12V
U2
dVdt
EN/UVLO
Vin
Vin
GND
GND
ILM
~FLT
Vout
TPS2595
R11
R_US
FLT
R10
R_US
+5V
C3
C_Polarized_US
C4
C_Polarized_US
12V_To_Hat
J6
Conn_01x03
+5V
R18
R_US
Conn_01x03
R9
R_US
U4
Delay
~Reset
GND
Wake_Up
Sense
WDI
Vout
Vin
NCV8508
DIODE
+12V
D1
C8
1uF
C5
0.1uF
SW2
SW_DIP_x08
R6
R7
R8
R12
R13
R14
R15
R16
R17
GPIO_A2
GPIO_A1
GPIO_A0
TMP_A0
TMP_A1
J8
Conn_01x03
DS_EN
To_Efuse_EN
GPIO_EN
U3
PCA9554ADR
C7
C_Small
R14
R15
SDA
SCL
GPIO_A0
GPIO_A1
GPIO_A2
GPIO_EN
FLT
A0
A1
A2
IO0
IO1
IO2
IO3
VSS
VDD
SDA
SCL
*INT
IO7
IO6
IO5
IO4
J3
Conn_02x50_Counter_Clockwise
SDA
SCL
P1
P2
P3
P4
MH1
MH2
J4
Conn_02x05_Counter_Clockwise
SDA
SCL
U1
TMP441AIDCNR
C6
C_Small
DXP
DXN
R1
R2
C2
C_Small
R_US
TMP_A1
TMP_A0
DXP
DXN
A1
A0
V+
SCL
SDA
GND
R3
R4
Conn_01x02
J2