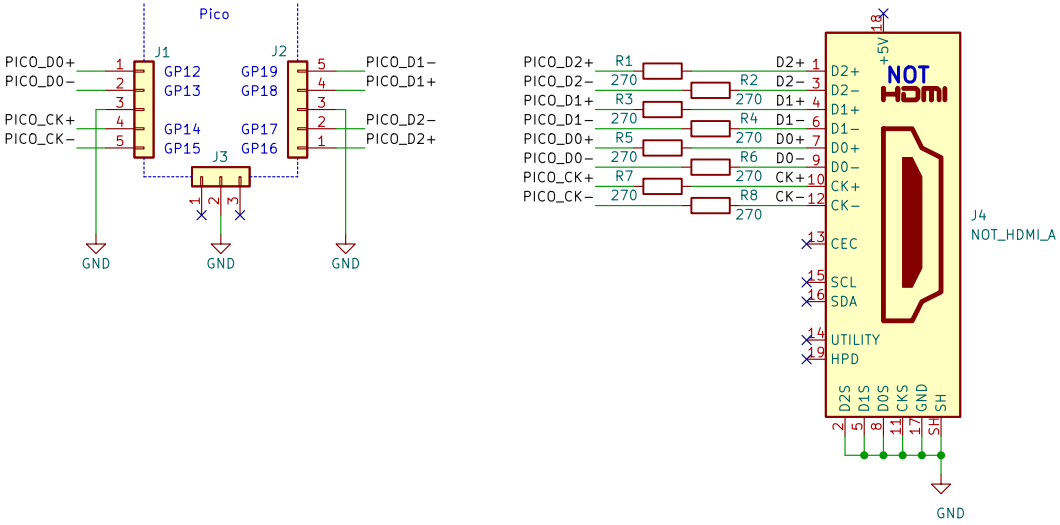

Sheet: /
File: dvi-sock.kicad_sch

Title: Pico DVI Sock (or Shim, or something, idk what to call it)

Size: A4	Date: 2021-02-01	Rev: A
KiCad E.D.A. kicad 5.99.0-unknown-8eca23aabe115ubuntu20.04.1		Id: 1/1