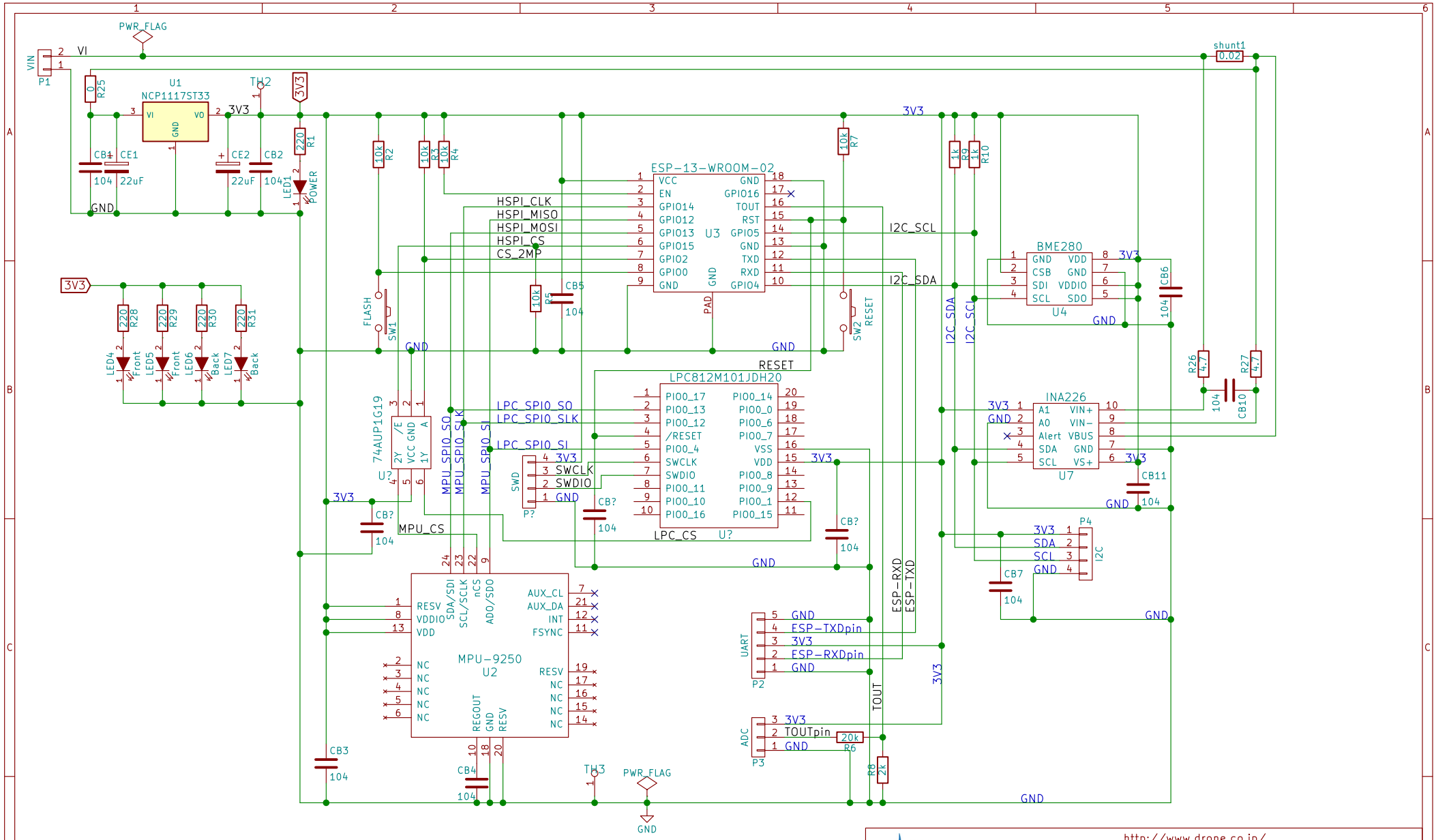

http://www.drone.co.jp/
Copyright (c) 2016 DroneWorks Inc.
All rights reserved
Creative Commons (CC BY-SA 4.0)

Project: hachidori-esp-lpc

Title:

Size: A4	Date: 2017-02-12	**Rev: 0.07**
Desinged by: Yuji Ogusu(@minaki1018)		Sheet: 1/1