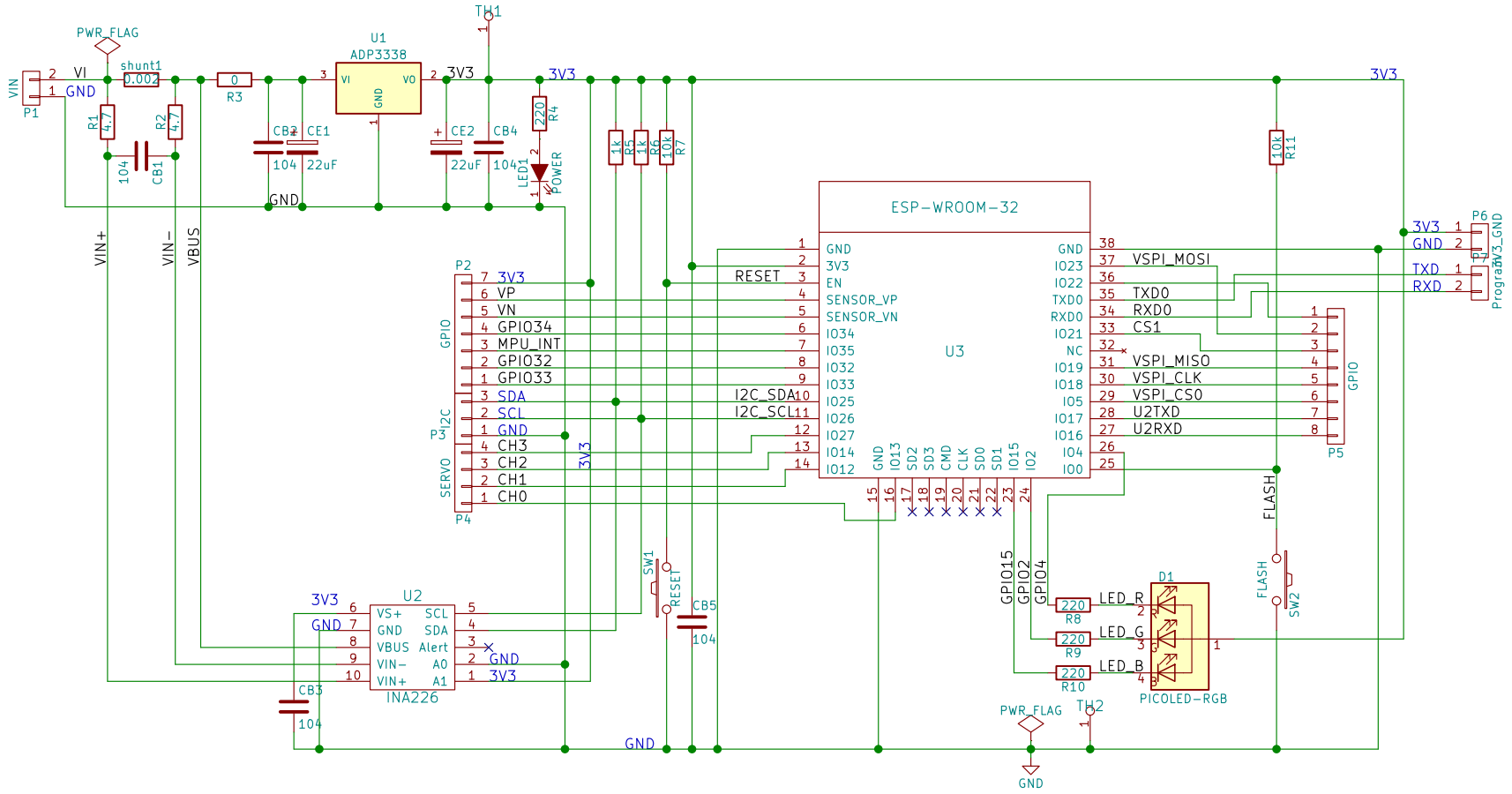

http://www.drone.co.jp/
Copyright (c) 2017 DroneWorks Inc.
All rights reserved
Creative Commons (CC BY−SA 4.0)

Project: hachidori−32

Title:

Size: A4	Date: 2017−02−24	**Rev: 0.12**
Desinged by: Yuji Ogusu(@minaki1018)		Sheet: 1/1