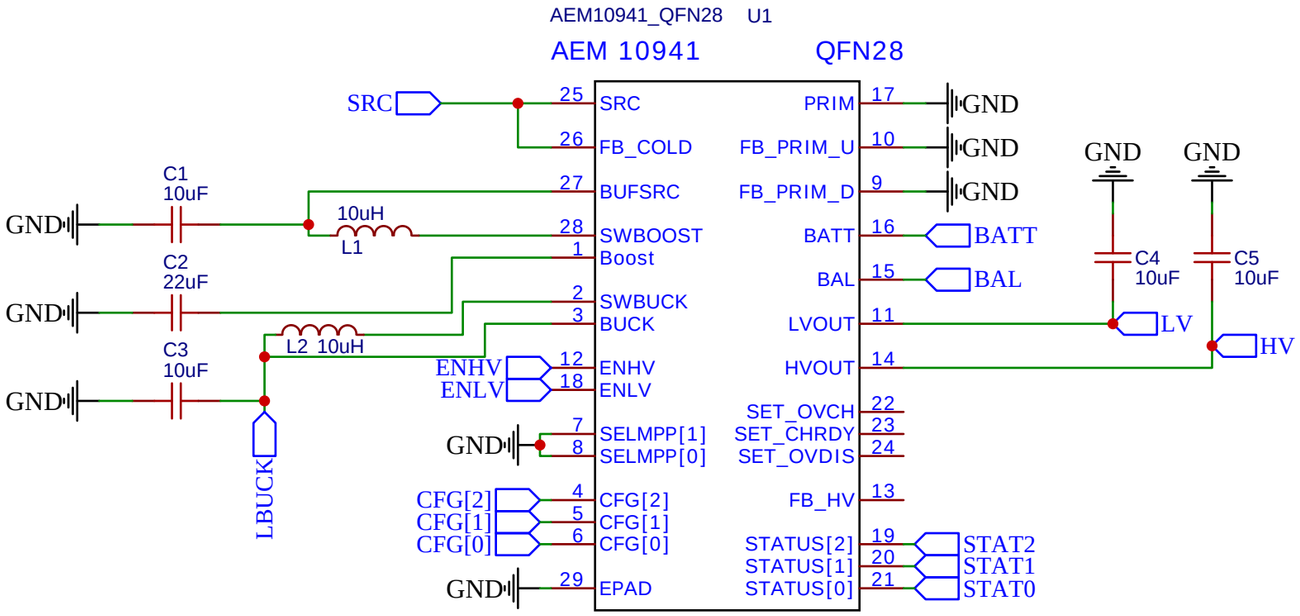

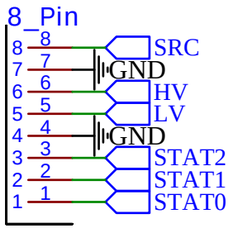

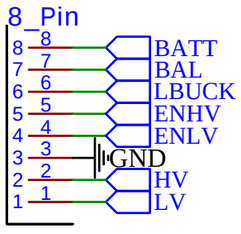

Output Selection

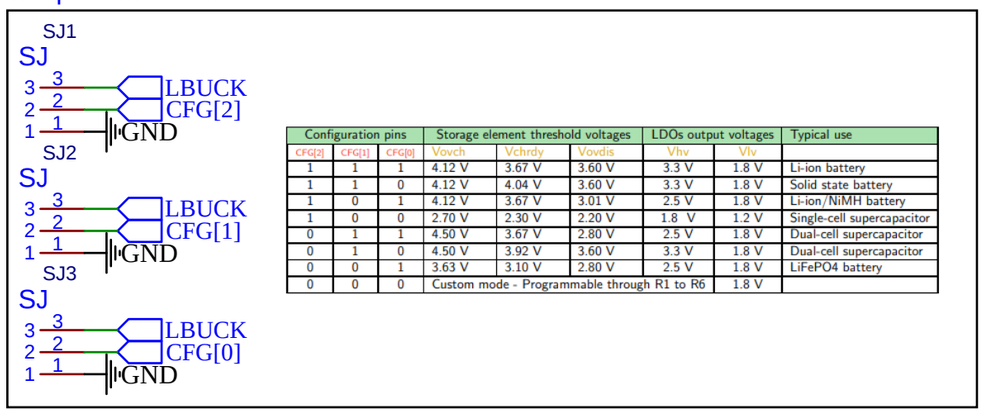

Configuration pins			Storage element threshold voltages			LDOs output voltages		Typical use
CFG[2]	CFG[1]	CFG[0]	Vovch	Vchrdy	Vovdis	Vhv	Vlv	
1	1	1	4.12 V	3.67 V	3.60 V	3.3 V	1.8 V	Li-ion battery
1	1	0	4.12 V	4.04 V	3.60 V	3.3 V	1.8 V	Solid state battery
1	0	1	4.12 V	3.67 V	3.01 V	2.5 V	1.8 V	Li-ion/NiMH battery
1	0	0	2.70 V	2.30 V	2.20 V	1.8 V	1.2 V	Single-cell supercapacitor
0	1	1	4.50 V	3.67 V	2.80 V	2.5 V	1.8 V	Dual-cell supercapacitor
0	1	0	4.50 V	3.92 V	3.60 V	3.3 V	1.8 V	Dual-cell supercapacitor
0	0	1	3.63 V	3.10 V	2.80 V	2.5 V	1.8 V	LiFePO4 battery
0	0	0	Custom mode - Programmable through R1 to R6				1.8 V	

TITLE: AEM BOOST

REV: 3.0

Company: ELECTROLANCE

Sheet: 1/1

Date: 2023-03-28

Drawn By: Matthew Bringle