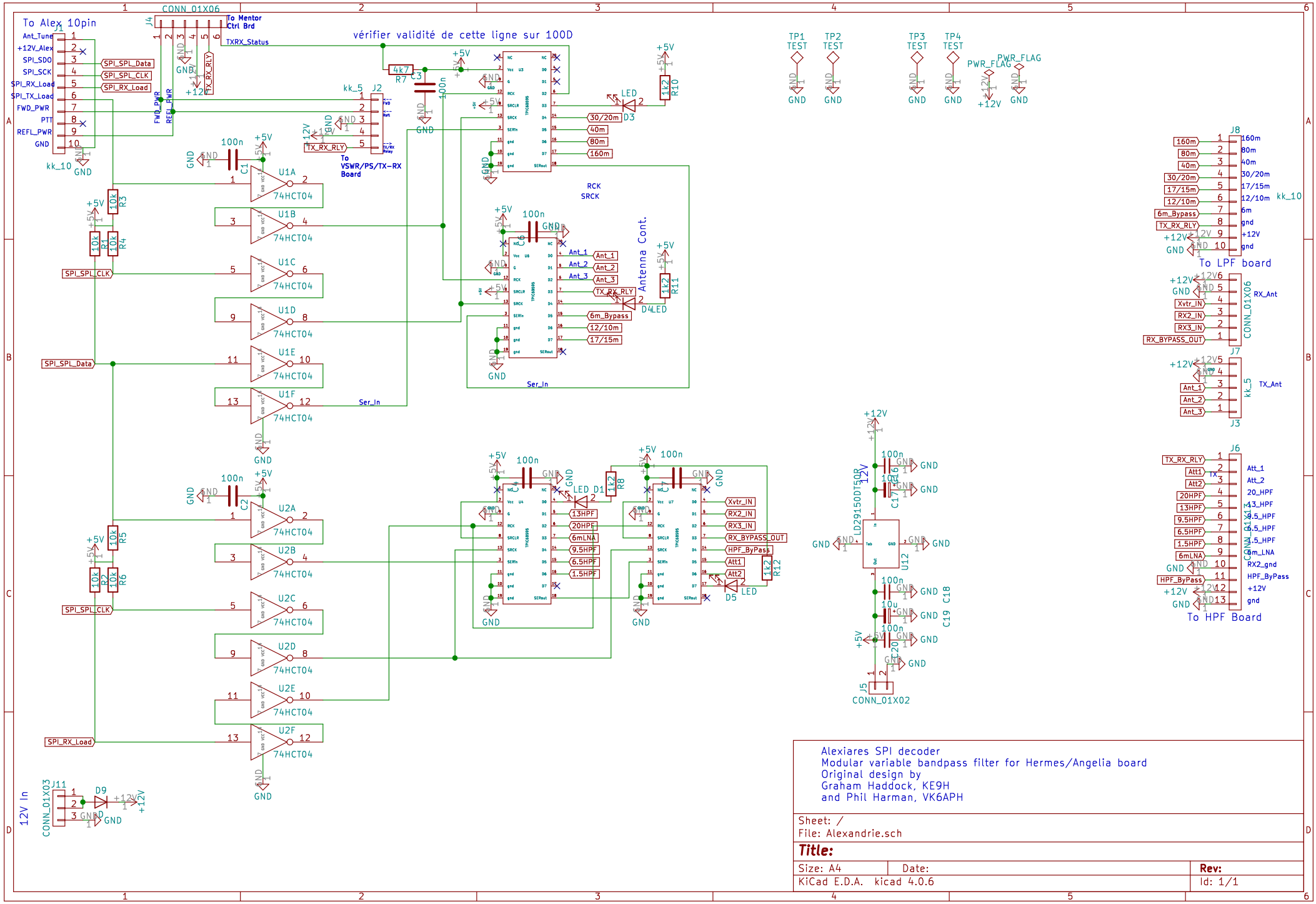
To Alex 10pin
J1
Ant_Tune
+12V_Alex
SPI_SDO
SPI_SCK
SPI_RX_Load
SPI_TX_Load
FWD_PWR
PTT
REFL_PWR
GND
kk_10
J4
CONN_01X06
To Mentor Ctrl Brd
TXRX_Status
vérifier validité de cette ligne sur 100D
SPI_SPI_Data
SPI_SPI_CLK
SPI_RX_Load
TX_RX_RLY
kk_5
J2
To VSWR/PS/TX-RX Board
4k7
R7
C3
100n
RCK
SRCK
Ser_In
Antenna Cont.
Ant_1
Ant_2
Ant_3
TX_RX_RLY
6m_Bypass
12/10m
17/15m
30/20m
40m
80m
160m
LED
D3
D4
R10
R11
74HCT04
U1A
U1B
U1C
U1D
U1E
U1F
U2A
U2B
U2C
U2D
U2E
U2F
C1
C2
R1
R2
R3
R4
R5
R6
10k
TPIC6B595
U3
U4
U6
U7
13HPF
20HPF
6mLNA
9.5HPF
6.5HPF
1.5HPF
D1
R8
R12
D5
Xvtr_IN
RX2_IN
RX3_IN
RX_BYPASS_OUT
HPF_ByPass
Att1
Att2
TP1 TEST
TP2 TEST
TP3 TEST
TP4 TEST
PWR_FLAG
+12V
+5V
GND
J8
160m
80m
40m
30/20m
17/15m
12/10m
6m
gnd
+12V
gnd
kk_10
To LPF board
J7
RX_Ant
Xvtr_IN
RX2_IN
RX3_IN
RX_BYPASS_OUT
CONN_01X06
J3
kk_5
TX_Ant
Ant_1
Ant_2
Ant_3
J6
TX_RX_RLY
Att1
Att2
20_HPF
13_HPF
9.5_HPF
6.5_HPF
1.5_HPF
6m_LNA
RX2_gnd
HPF_ByPass
+12V
gnd
To HPF Board
LD29150DT50R
U12
C16
C17
C18
C19
C20
10u
J5
CONN_01X02
J11
CONN_01X03
12V In
D9
Alexiares SPI decoder
Modular variable bandpass filter for Hermes/Angelia board
Original design by
Graham Haddock, KE9H
and Phil Harman, VK6APH
Sheet: /
File: Alexandrie.sch
Title:
Size: A4
Date:
Rev:
KiCad E.D.A. kicad 4.0.6
Id: 1/1