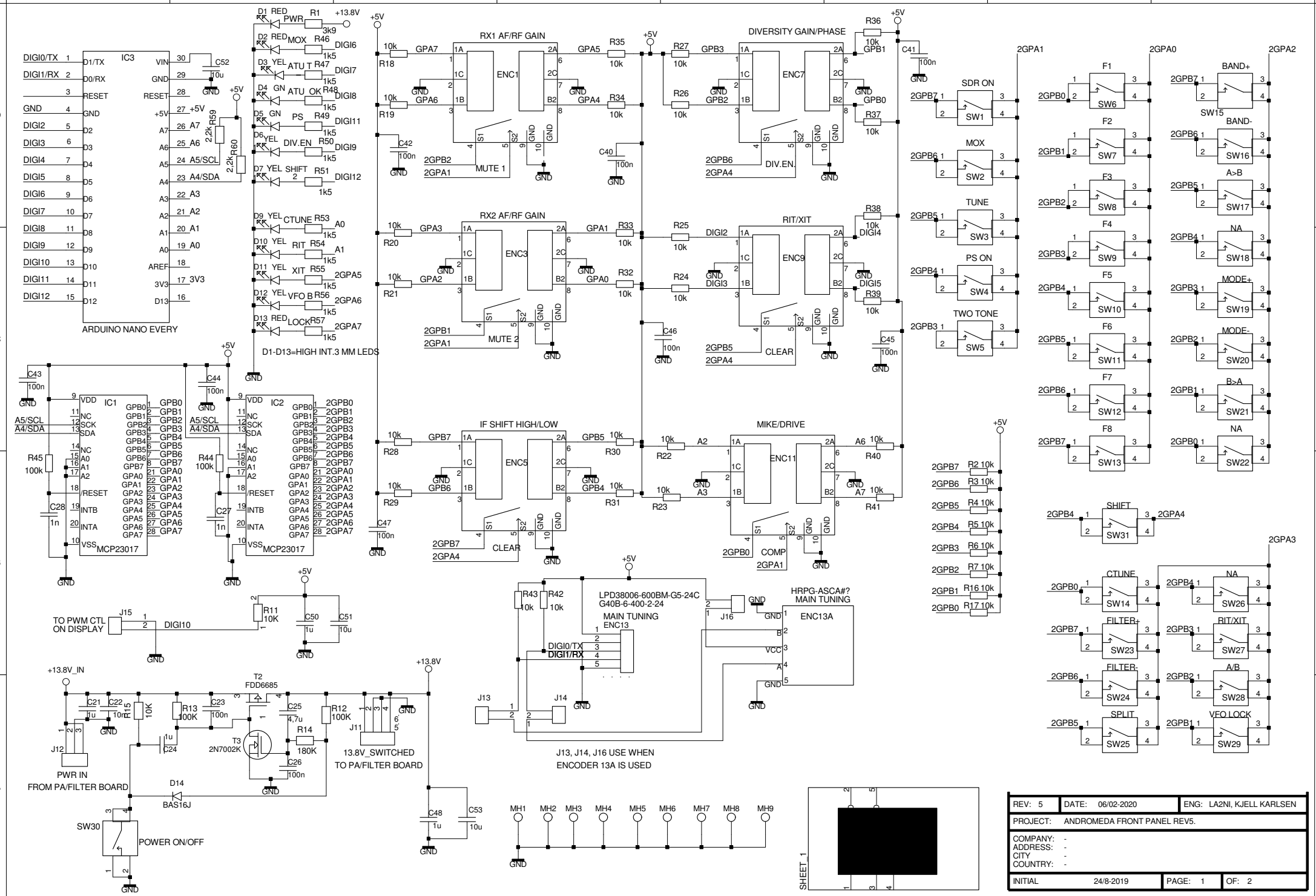
ARDUINO NANO EVERY
IC3
D1-D13=HIGH INT.3 MM LEDS
RX1 AF/RF GAIN
ENC1
MUTE 1
RX2 AF/RF GAIN
ENC3
MUTE 2
IF SHIFT HIGH/LOW
ENC5
CLEAR
DIVERSITY GAIN/PHASE
ENC7
DIV.EN.
RIT/XIT
ENC9
CLEAR
MIKE/DRIVE
ENC11
COMP
IC1
IC2
MCP23017
SDR ON
MOX
TUNE
PS ON
TWO TONE
BAND+
BAND-
A>B
NA
MODE+
MODE-
B>A
SHIFT
CTUNE
FILTER+
FILTER-
SPLIT
RIT/XIT
A/B
VFO LOCK
TO PWM CTL
ON DISPLAY
LPD38006-600BM-G5-24C
G40B-6-400-2-24
MAIN TUNING
ENC13
HRPG-ASCA#?
MAIN TUNING
ENC13A
J13, J14, J16 USE WHEN
ENCODER 13A IS USED
PWR IN
FROM PA/FILTER BOARD
13.8V_SWITCHED
TO PA/FILTER BOARD
POWER ON/OFF
REV: 5
DATE: 06/02-2020
ENG: LA2NI, KJELL KARLSEN
PROJECT: ANDROMEDA FRONT PANEL REV5.
COMPANY: -
ADDRESS: -
CITY -
COUNTRY: -
INITIAL 24/8-2019
PAGE: 1
OF: 2

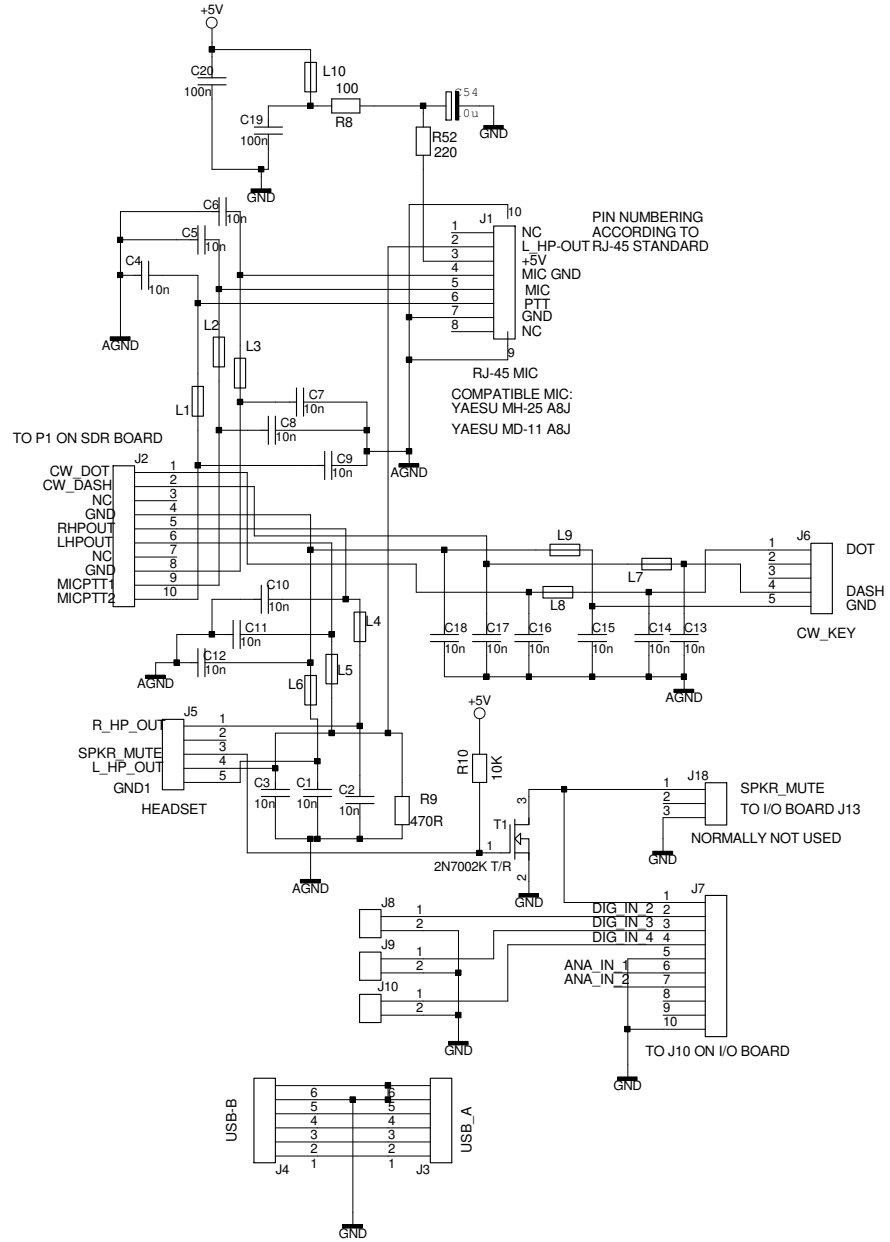

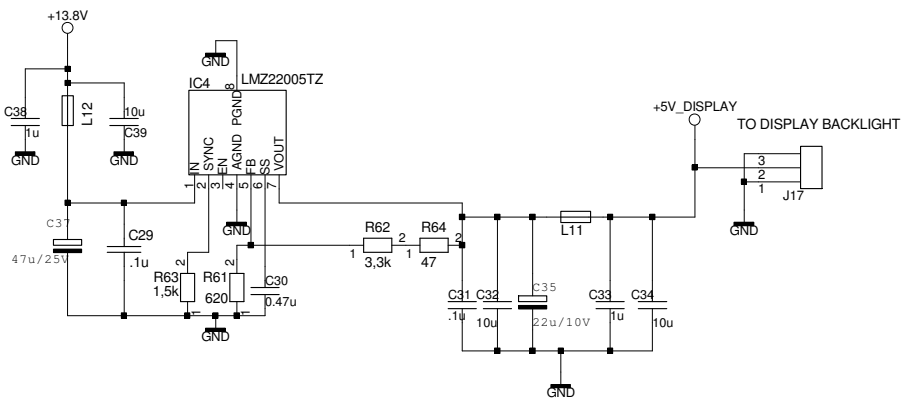

REV: 5	DATE: 06/02-2020	ENG: -
PROJECT: ANDROMEDA FRONT PANEL REV5		
COMPANY: - ADDRESS: - CITY - COUNTRY: -		
INITIAL 24/8-2019	PAGE: 2	OF: 2