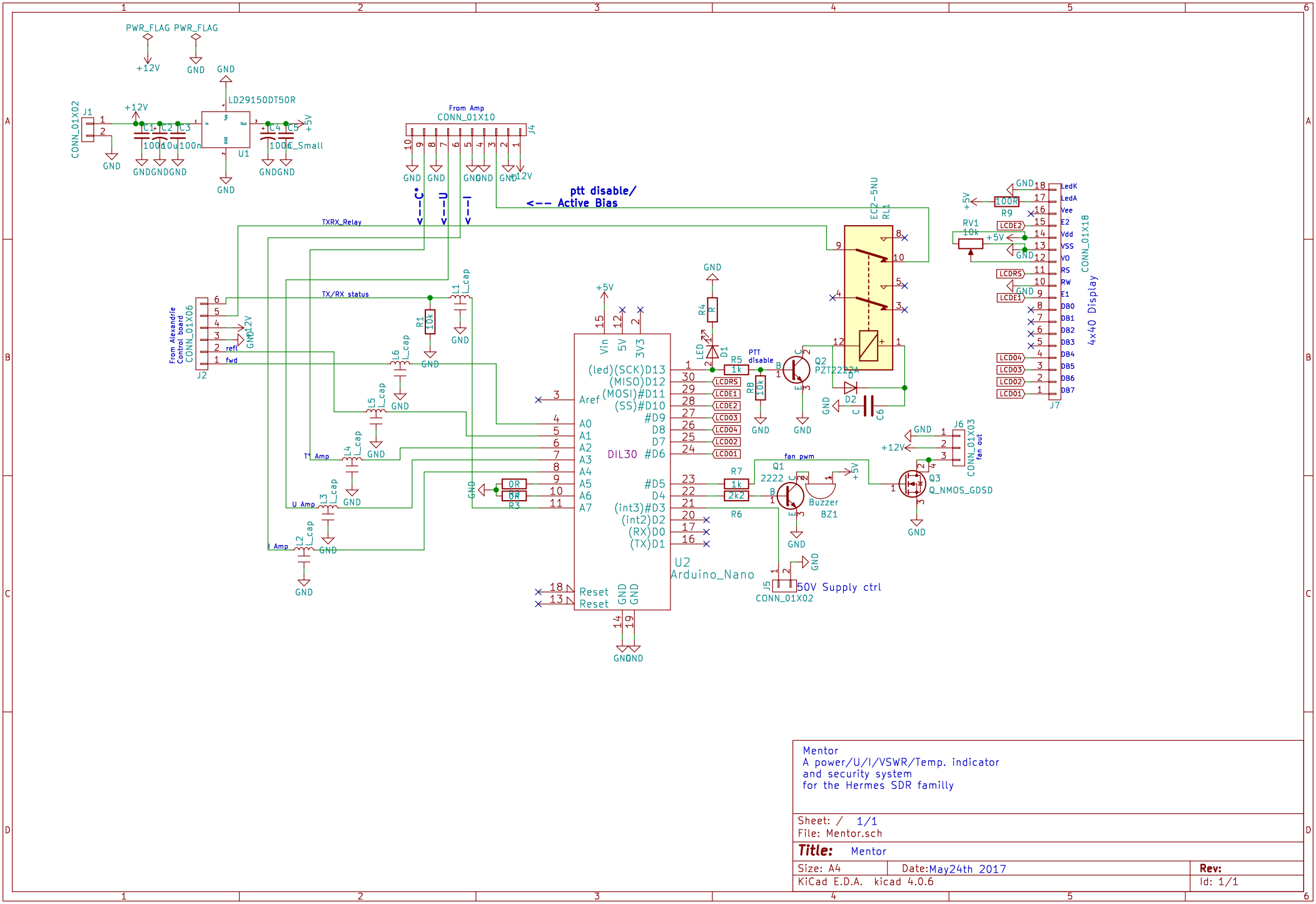

Mentor
A power/U/I/VSWR/Temp. indicator
and security system
for the Hermes SDR familly

Sheet: / 1/1
File: Mentor.sch

Title: Mentor

Size: A4	Date:May24th 2017	Rev:
KiCad E.D.A. kicad 4.0.6		Id: 1/1