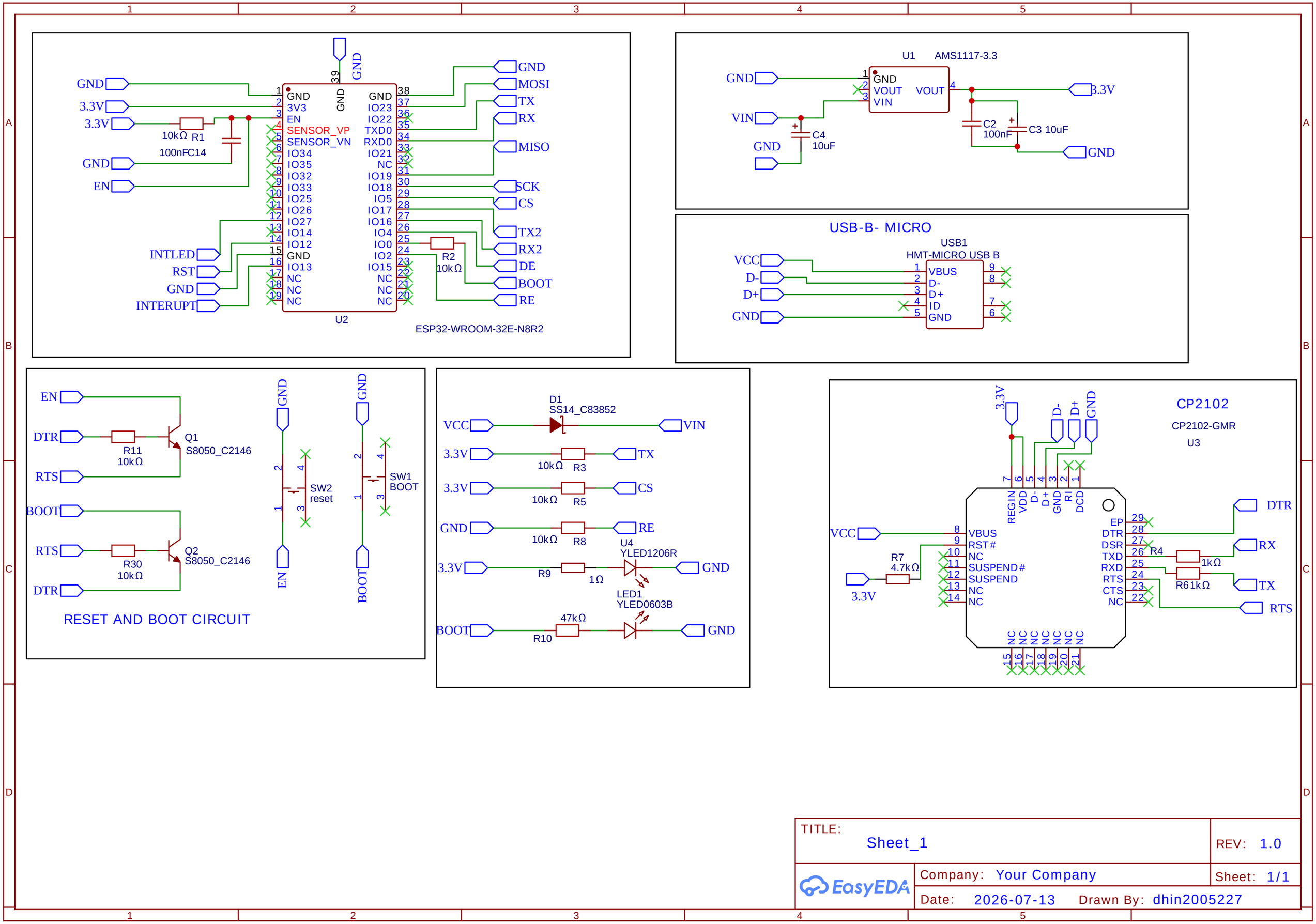

TITLE: Sheet_1	REV: 1.0
EasyEDA — Company: Your Company	Sheet: 1/1
Date: 2026-07-13 Drawn By: dhin2005227	

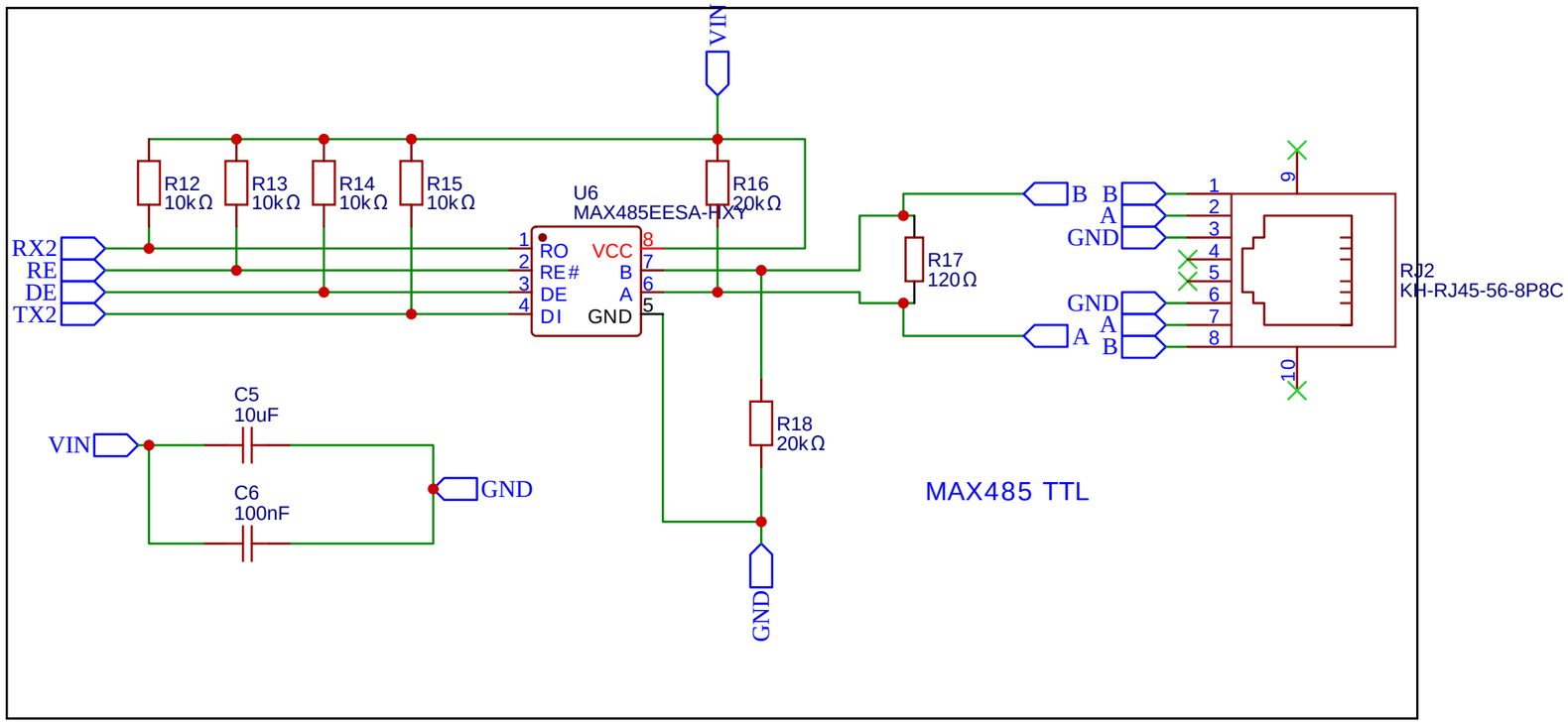

TITLE: Sheet_2		REV: 1.0
EasyEDA	Company: Your Company	Sheet: 1/1
	Date: 2026-07-14 Drawn By: dhin2005227	

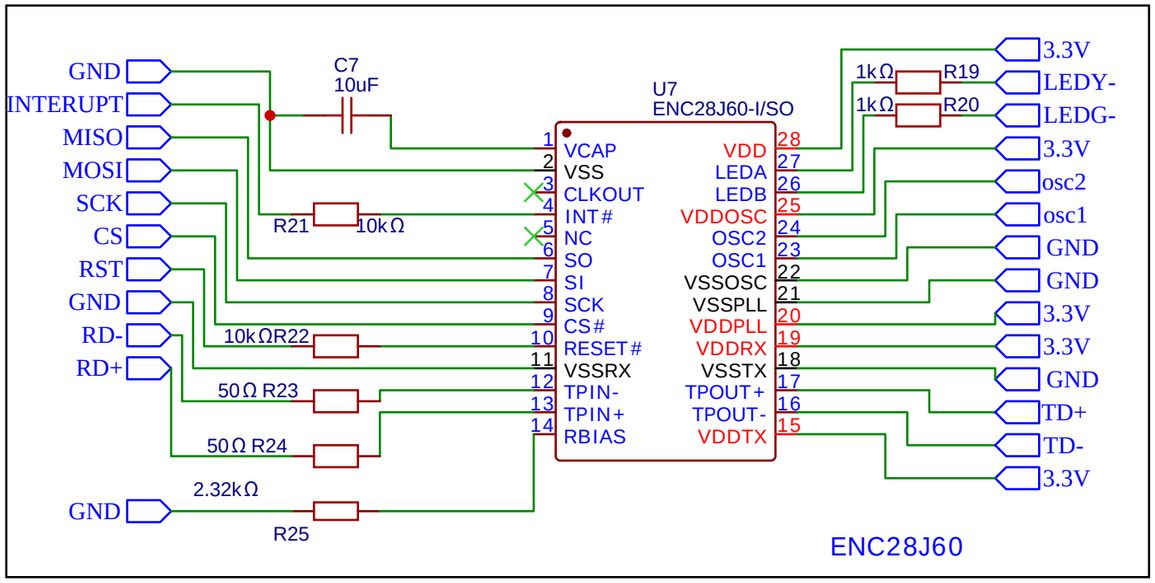

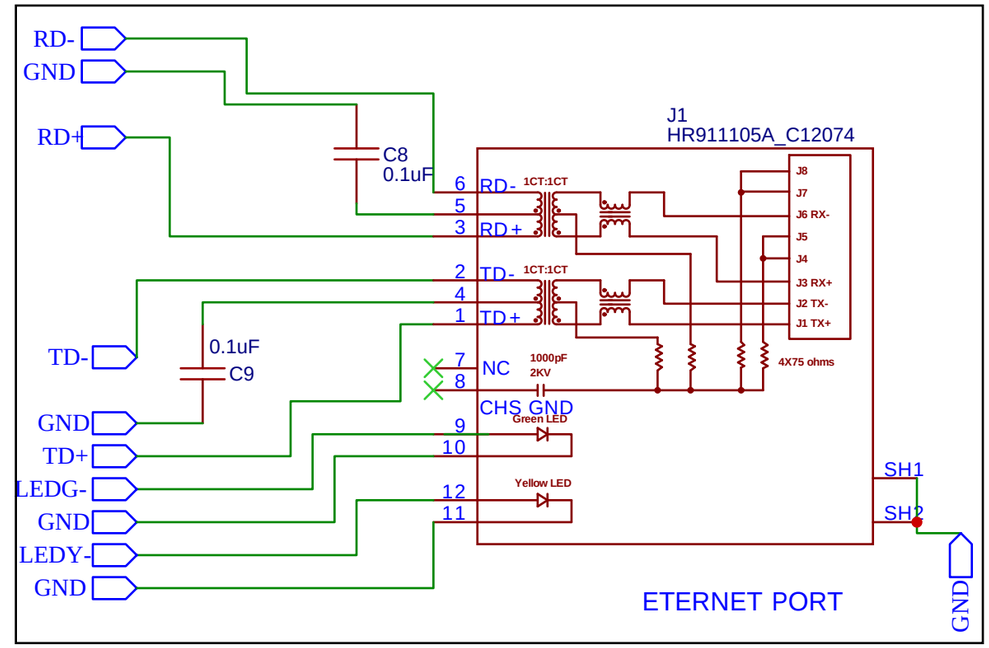

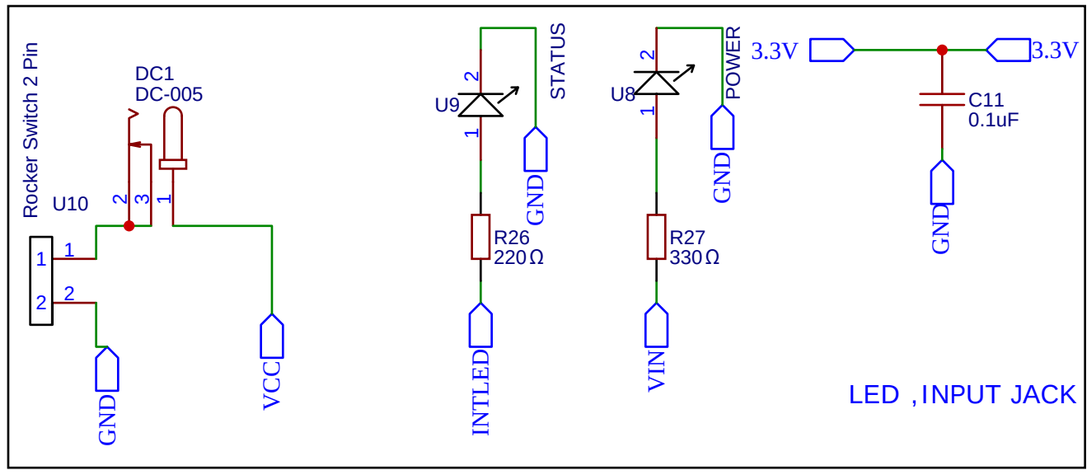

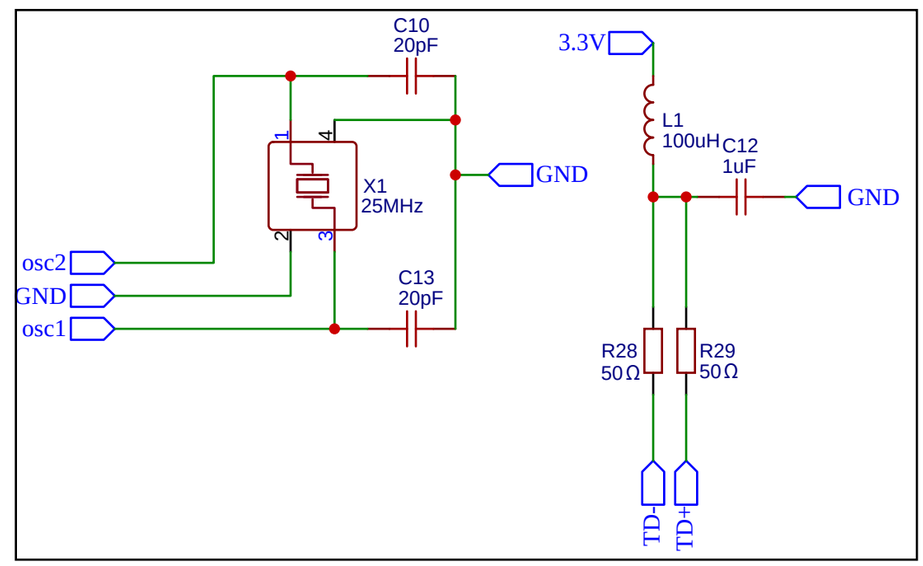

TITLE: Sheet_3		REV: 1.0
EasyEDA	Company: Your Company	Sheet: 1/1
	Date: 2026-07-14 Drawn By: dhin2005227	