REV	DESCRIPTION	DATE	BY
A2	Production Release	8/28/2015	TI
A2b	Production Release, BOM fixes	10/09/2015	

P01 TITLE PAGE
P02 12V INPUT, 3.3V AND 5V SWITCHERS
P03 TPS6590371 1 CONTROL
P04 TPS6590371 2 RESET, & RTC
P05 TPS6590371 3 MPU,DDR, & DSP SWITCHERS
P06 TPS6590371 4 CORE & 1.8V
P07 AM572X CORE POWER & EEPROM
P08 AM572X CLOCKS AND RESET
P09 AM572X IO POWER AND GROUND
P10 AM572X DDR3 POWER & JTAG
P11 AM572X ETHERNET 1
P12 AM572X ETHERNET 2
P13 AM572X GPMC & LCD
P14 AM572X USB INTERFACES
P15 AM572X I/O, LEDs, AND GPIO
P16 AM572X AUDIO & DEBUG SERIAL
P17 AM572X HDMI PORT
P18 AM572X eMMC, MMC3, & uSD
P19 AM572X DDR INTERFACE 1
P20 AM572X DDR INTERFACE 2
P21 DDR3 BANK 1
P22 DDR3 BANK 2
P23 DDR3 BANK 2 CAPS & TERM
P24 DDR3 BANK 1 CAPS & TERM
P25 USB & SATA CONNECTOR
P26 PCIe, SATA, & SERDES CLOCK
P27 EXPANSION HEADERS
P28 MECHANICAL

Catalog Processors

Texas Instruments, Inc.
Catalog Processors Business Unit
12500 TI Blvd
Dallas, TX 75243

TEXAS INSTRUMENTS

AM572x General Purpose EVM Processor Module

Title Page

Size	Document Number	Modified By:	Rev
B	am572x_gp_evm_REV_A2b.dsn	TI Applications	A2b

Date: Friday, October 09, 2015 Sheet: 1 of 27

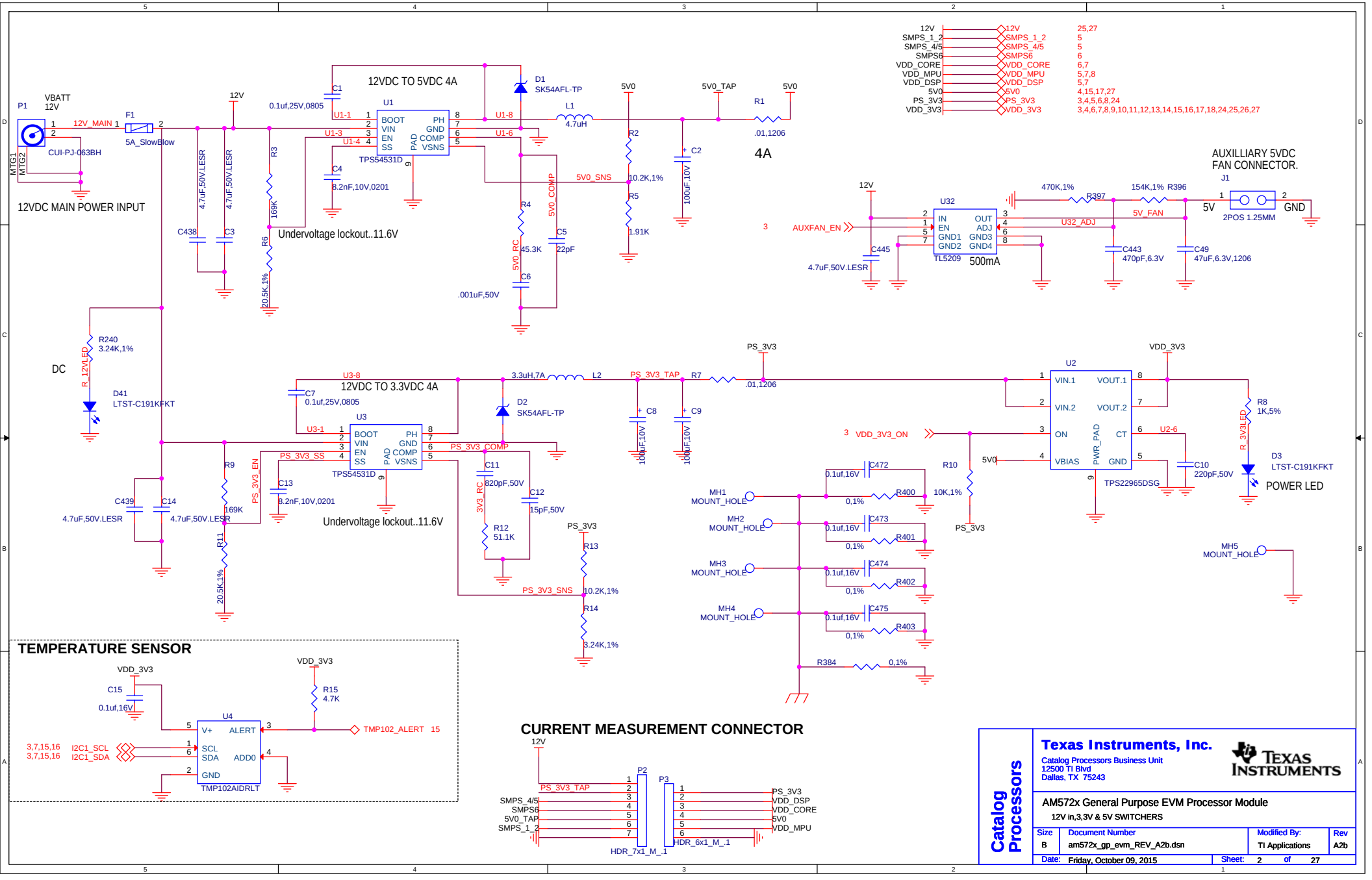
12VDC MAIN POWER INPUT
12VDC TO 5VDC 4A
Undervoltage lockout..11.6V
12VDC TO 3.3VDC 4A
Undervoltage lockout..11.6V
AUXILLIARY 5VDC FAN CONNECTOR.
DC
POWER LED
TEMPERATURE SENSOR
CURRENT MEASUREMENT CONNECTOR
4A
500mA
Texas Instruments, Inc.
Catalog Processors Business Unit
12500 TI Blvd
Dallas, TX 75243
AM572x General Purpose EVM Processor Module
12V in,3,3V & 5V SWITCHERS
Catalog Processors
Size B
Document Number am572x_gp_evm_REV_A2b.dsn
Modified By: TI Applications
Rev A2b
Date: Friday, October 09, 2015
Sheet: 2 of 27

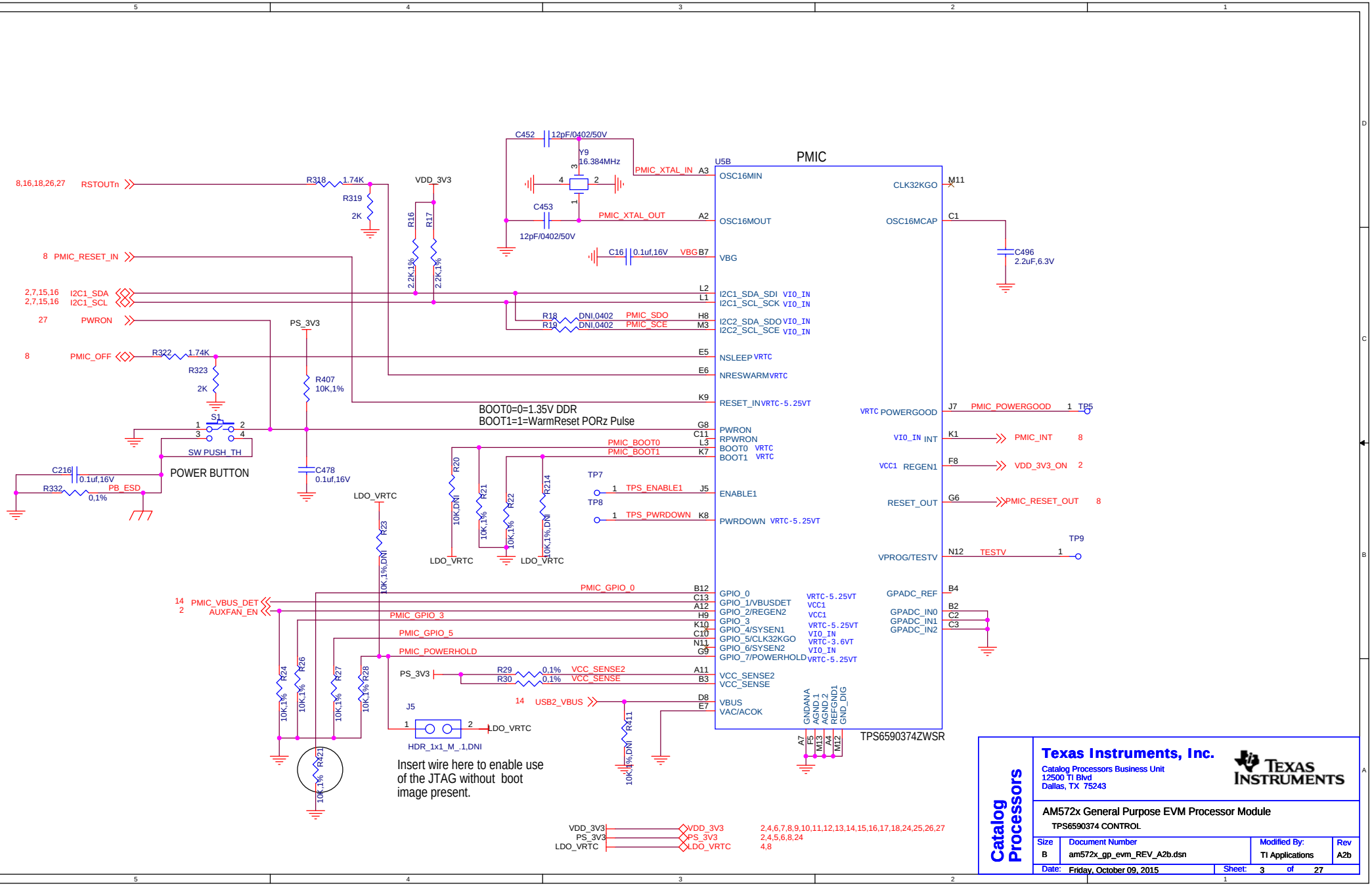
PMIC
U5B
TPS6590374ZWSR
C452 12pF/0402/50V
Y9 16.384MHz
C453 12pF/0402/50V
C16 0.1uf,16V
C496 2.2uF,6.3V
R318 1.74K
R319 2K
R16 2.2K,1%
R17 2.2K,1%
R322 1.74K
R323 2K
R407 10K,1%
C478 0.1uf,16V
C216 0.1uf,16V
R332 0,1%
SW PUSH_TH
POWER BUTTON
PB_ESD
BOOT0=0=1.35V DDR
BOOT1=1=WarmReset PORz Pulse
R18 DNI,0402
R19 DNI,0402
R20 10K,DNI
R21 10K,1%
R22 10K,1%
R214 10K,1%,DNI
R23 10K,1%,DNI
R24 10K,1%
R26 10K,1%
R27 10K,1%
R28 10K,1%
R421 10K,1%
R29 0,1%
R30 0,1%
R411 10K,1%,DNI
J5
HDR_1x1_M_.1,DNI
Insert wire here to enable use of the JTAG without boot image present.
RSTOUTn
PMIC_RESET_IN
I2C1_SDA
I2C1_SCL
PWRON
PMIC_OFF
PMIC_XTAL_IN
PMIC_XTAL_OUT
PMIC_SDO
PMIC_SCE
PMIC_BOOT0
PMIC_BOOT1
TPS_ENABLE1
TPS_PWRDOWN
PMIC_GPIO_0
PMIC_VBUS_DET
AUXFAN_EN
PMIC_GPIO_3
PMIC_GPIO_5
PMIC_POWERHOLD
VCC_SENSE2
VCC_SENSE
USB2_VBUS
LDO_VRTC
PS_3V3
VDD_3V3
OSC16MIN
OSC16MOUT
VBG
I2C1_SDA_SDI
I2C1_SCL_SCK
I2C2_SDA_SDO
I2C2_SCL_SCE
NSLEEP
NRESWARM
RESET_IN
PWRON
RPWRON
BOOT0
BOOT1
ENABLE1
PWRDOWN
GPIO_0
GPIO_1/VBUSDET
GPIO_2/REGEN2
GPIO_3
GPIO_4/SYSEN1
GPIO_5/CLK32KGO
GPIO_6/SYSEN2
GPIO_7/POWERHOLD
VBUS
VAC/ACOK
CLK32KGO
OSC16MCAP
POWERGOOD
INT
REGEN1
RESET_OUT
VPROG/TESTV
GPADC_REF
GPADC_IN0
GPADC_IN1
GPADC_IN2
GNDANA
AGND_1
AGND_2
REFGND1
GND_DIG
PMIC_POWERGOOD
PMIC_INT
VDD_3V3_ON
PMIC_RESET_OUT
TESTV
TP5
TP7
TP8
TP9
S1
Catalog Processors
Texas Instruments, Inc.
Catalog Processors Business Unit
12500 TI Blvd
Dallas, TX 75243
AM572x General Purpose EVM Processor Module
TPS6590374 CONTROL
Size B
Document Number am572x_gp_evm_REV_A2b.dsn
Modified By: TI Applications
Rev A2b
Date: Friday, October 09, 2015
Sheet: 3 of 27

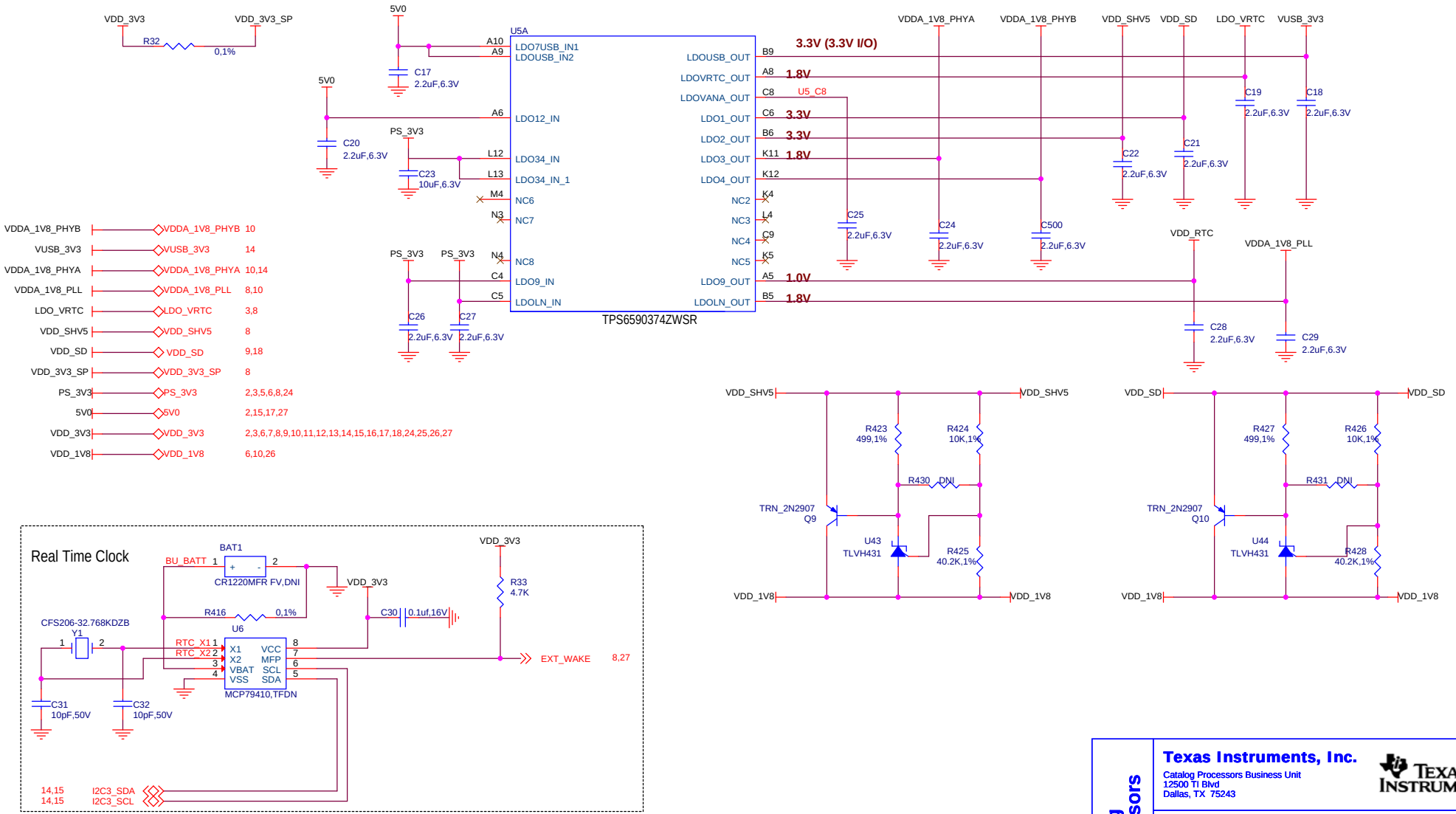

Catalog Processors

Texas Instruments, Inc.

Catalog Processors Business Unit
12500 TI Blvd
Dallas, TX 75243

TEXAS INSTRUMENTS

AM572x General Purpose EVM Processor Module

TPS6590374 CONTROL

Size	Document Number	Modified By:	Rev
B	am572x_gp_evm_REV_A2b.dsn	TI Applications	A2b

Date: Friday, October 09, 2015 Sheet: 4 of 27

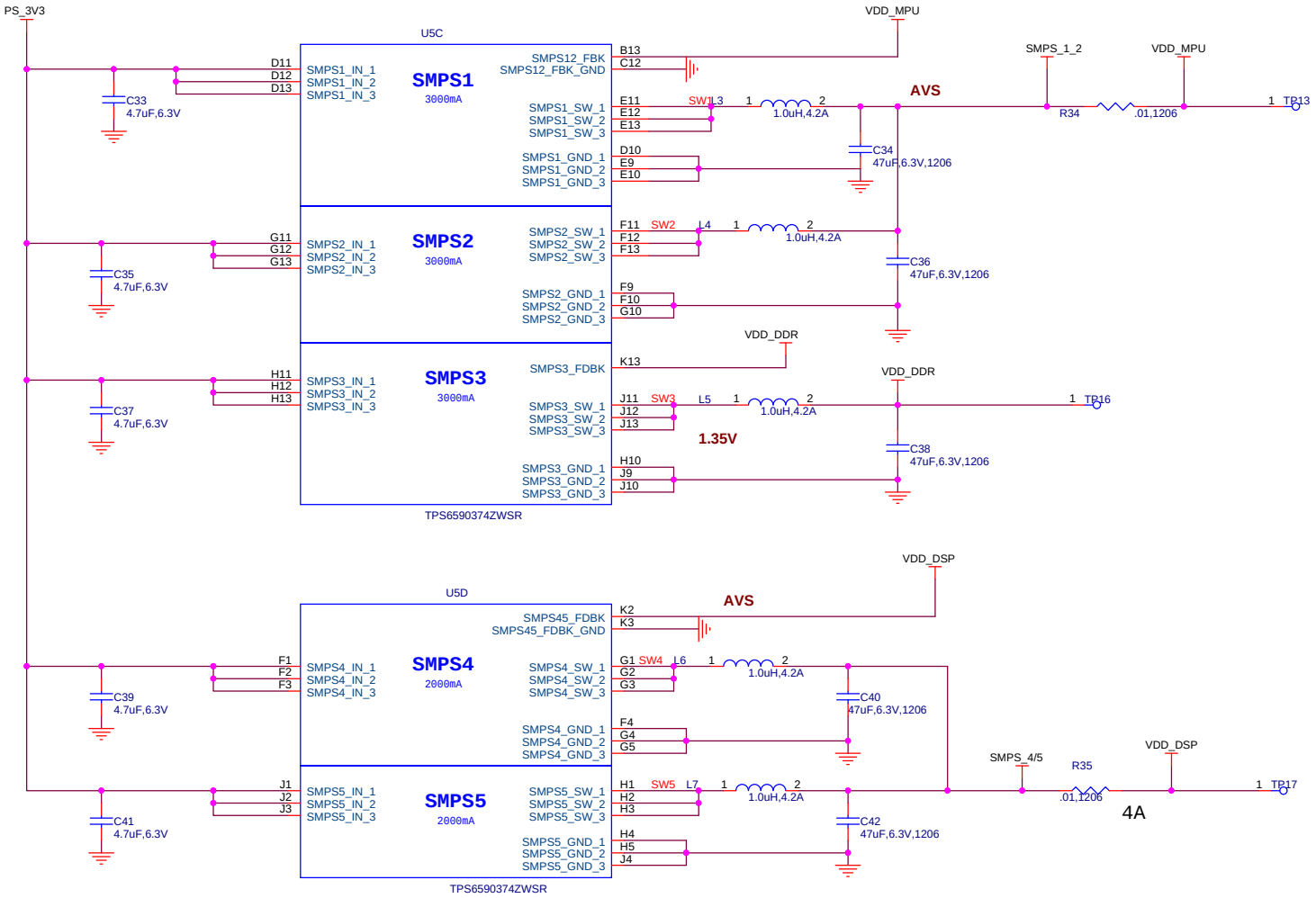

SMPS_1_2	SMPS_1_2	2
VDD_MPU	VDD_MPU	2,7,8
VDD_DDR	VDD_DDR	10,19,21,22,23,24
VDD_DSP	VDD_DSP	2,7
PS_3V3	PS_3V3	2,3,4,6,8,24
SMPS_4/5	SMPS_4/5	2

Catalog Processors

Texas Instruments, Inc.
Catalog Processors Business Unit
12500 TI Blvd
Dallas, TX 75243

AM572x General Purpose EVM Processor Module
TPS6590374 MPU, DDR, & DSP

Size	Document Number	Modified By:	Rev
B	am572x_gp_evm_REV_A2b.dsn	TI Applications	A2b

Date: Friday, October 09, 2015 Sheet: 5 of 27

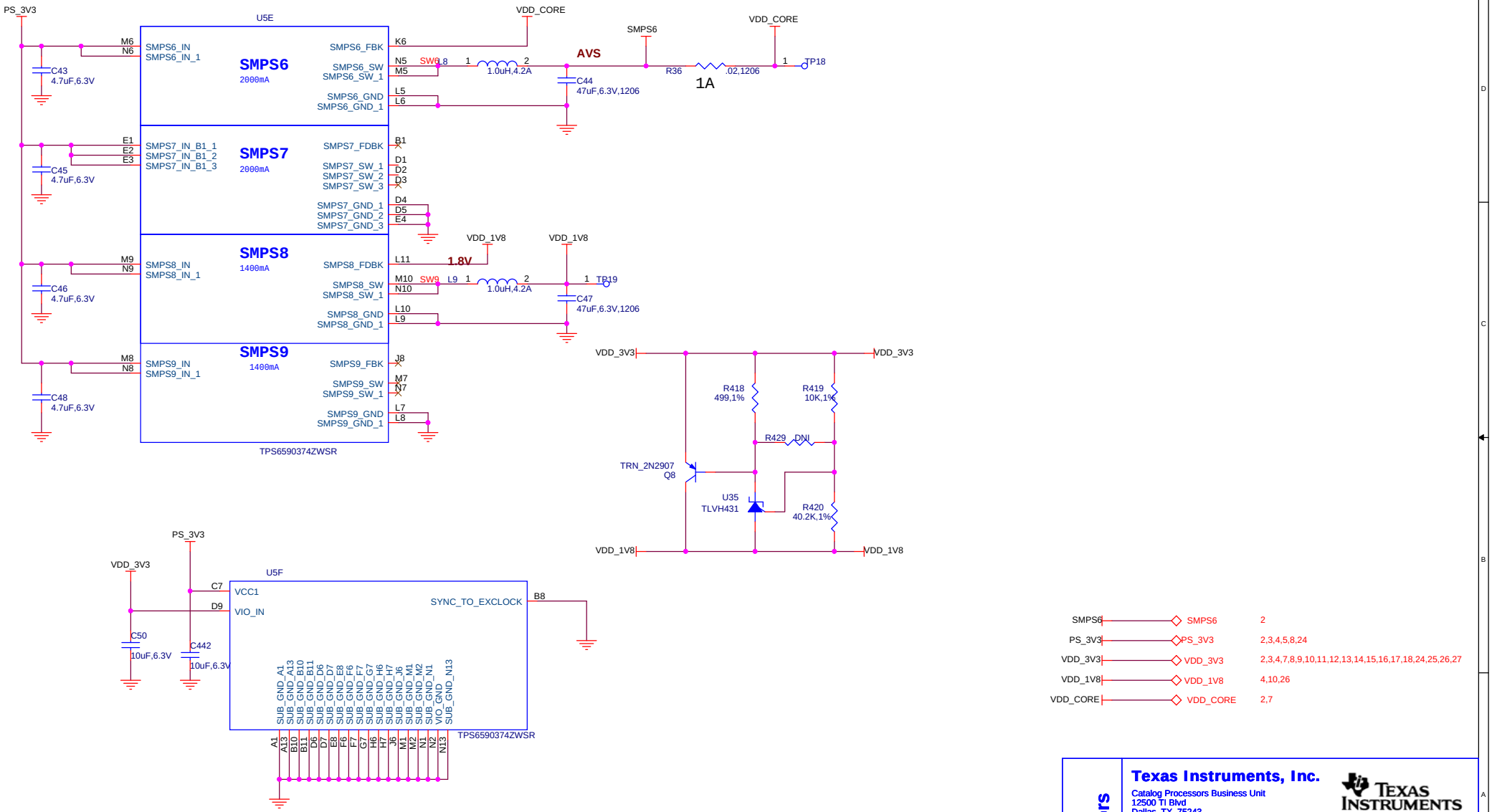

SMPS6	SMPS6	2
PS_3V3	PS_3V3	2,3,4,5,8,24
VDD_3V3	VDD_3V3	2,3,4,7,8,9,10,11,12,13,14,15,16,17,18,24,25,26,27
VDD_1V8	VDD_1V8	4,10,26
VDD_CORE	VDD_CORE	2,7

Catalog Processors

Texas Instruments, Inc.
Catalog Processors Business Unit
12500 TI Blvd
Dallas, TX 75243

AM572x General Purpose EVM Processor Module
TPS6590374 SWITCHERS

Size	Document Number	Modified By:	Rev
B	am572x_gp_evm_REV_A2b.dsn	TI Applications	A2b

Date: Friday, October 09, 2015 Sheet: 6 of 27

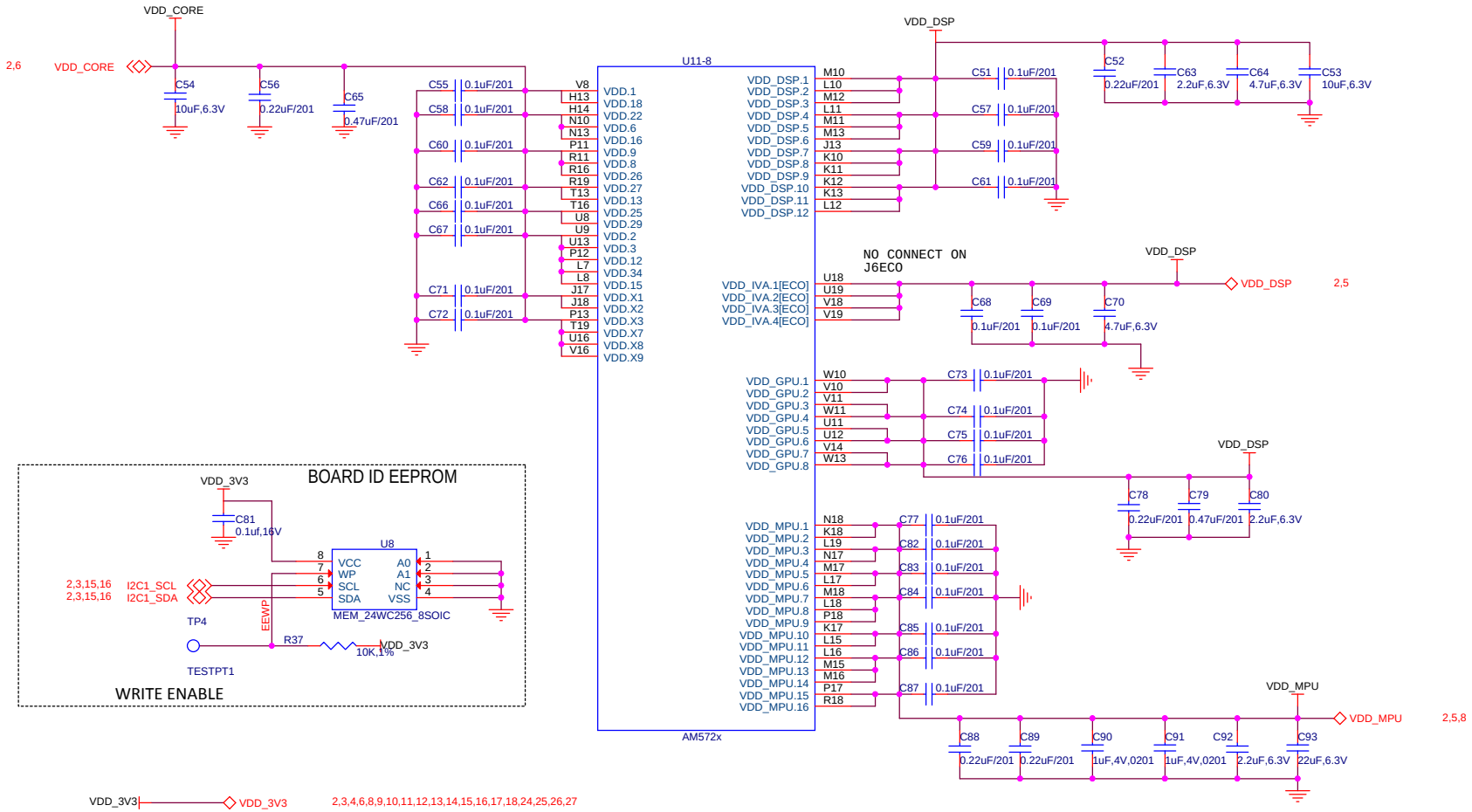

Catalog Processors

Texas Instruments, Inc.

Catalog Processors Business Unit
12500 TI Blvd
Dallas, TX 75243

TEXAS INSTRUMENTS

AM572x General Purpose EVM Processor Module

AM5728 CORE POWER

Size	Document Number	Modified By:	Rev
B	am572x_gp_evm_REV_A2b.dsn	TI Applications	A2b

Date: Friday, October 09, 2015 Sheet: 7 of 27

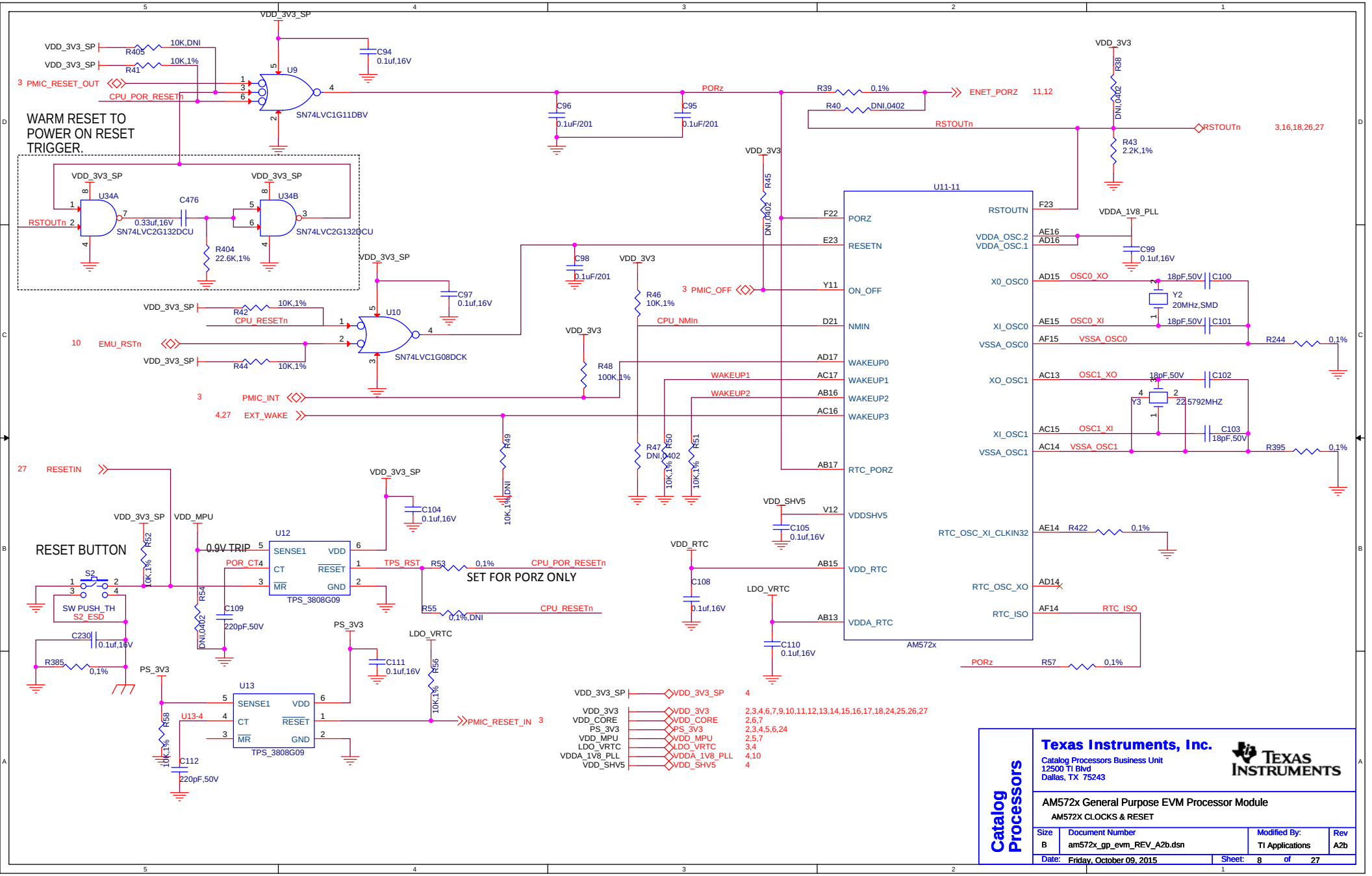
WARM RESET TO POWER ON RESET TRIGGER.
RESET BUTTON
0.9V TRIP
SET FOR PORZ ONLY
SN74LVC1G11DBV
SN74LVC2G132DCU
SN74LVC1G08DCK
TPS_3808G09
AM572x
U11-11
Texas Instruments, Inc.
Catalog Processors Business Unit
12500 TI Blvd
Dallas, TX 75243
AM572x General Purpose EVM Processor Module
AM572X CLOCKS & RESET
Catalog Processors
Size B
Document Number am572x_gp_evm_REV_A2b.dsn
Modified By: TI Applications
Rev A2b
Date: Friday, October 09, 2015
Sheet: 8 of 27

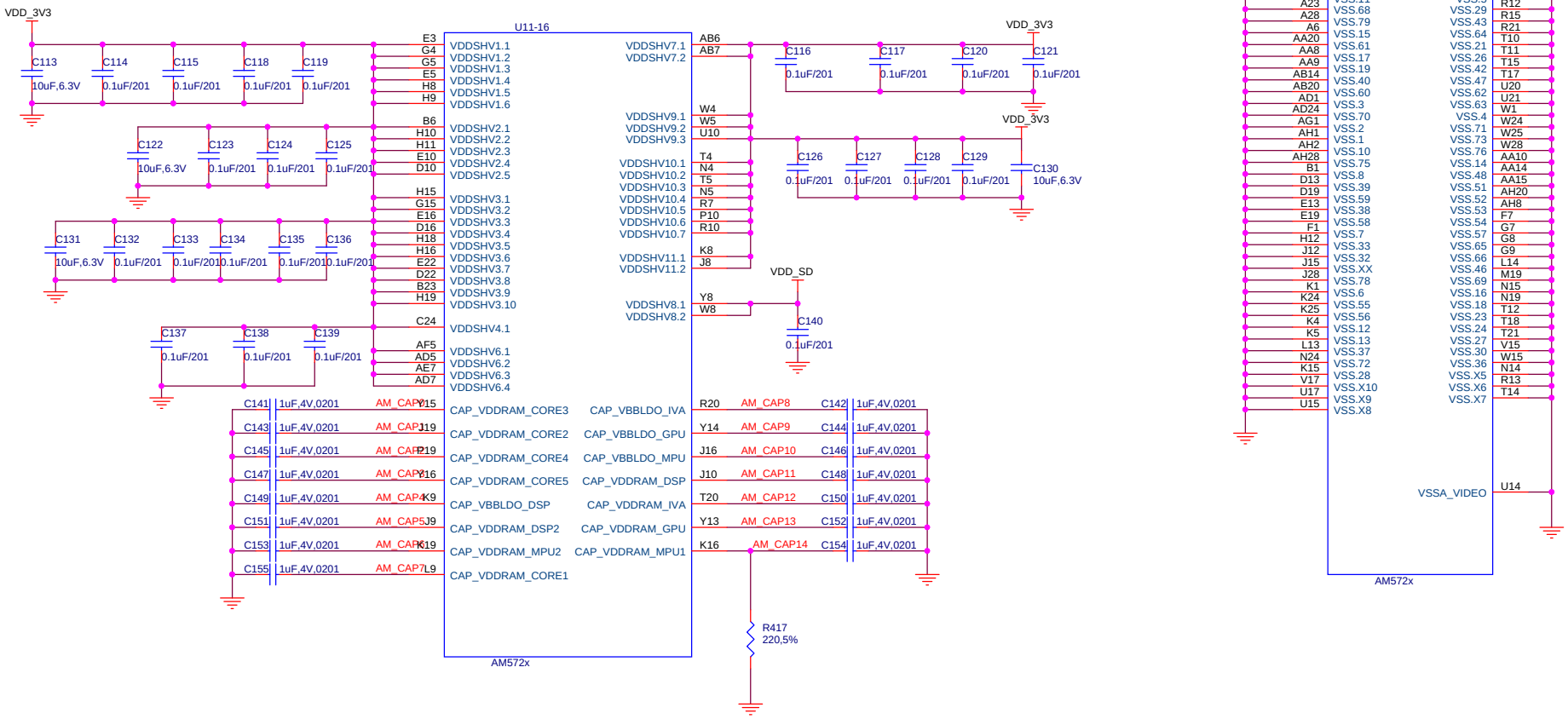

VDD_SD — VDD_SD — 4,18

VDD_3V3 — VDD_3V3 — 2,3,4,6,7,8,10,11,12,13,14,15,16,17,18,24,25,26,27

Catalog Processors

Texas Instruments, Inc.

Catalog Processors Business Unit
12500 TI Blvd
Dallas, TX 75243

TEXAS INSTRUMENTS

AM572x General Purpose EVM Processor Module

AM572X I/O POWER & GROUND

Size	Document Number	Modified By:	Rev
B	am572x_gp_evm_REV_A2b.dsn	TI Applications	A2b

Date: Friday, October 09, 2015 Sheet: 9 of 27

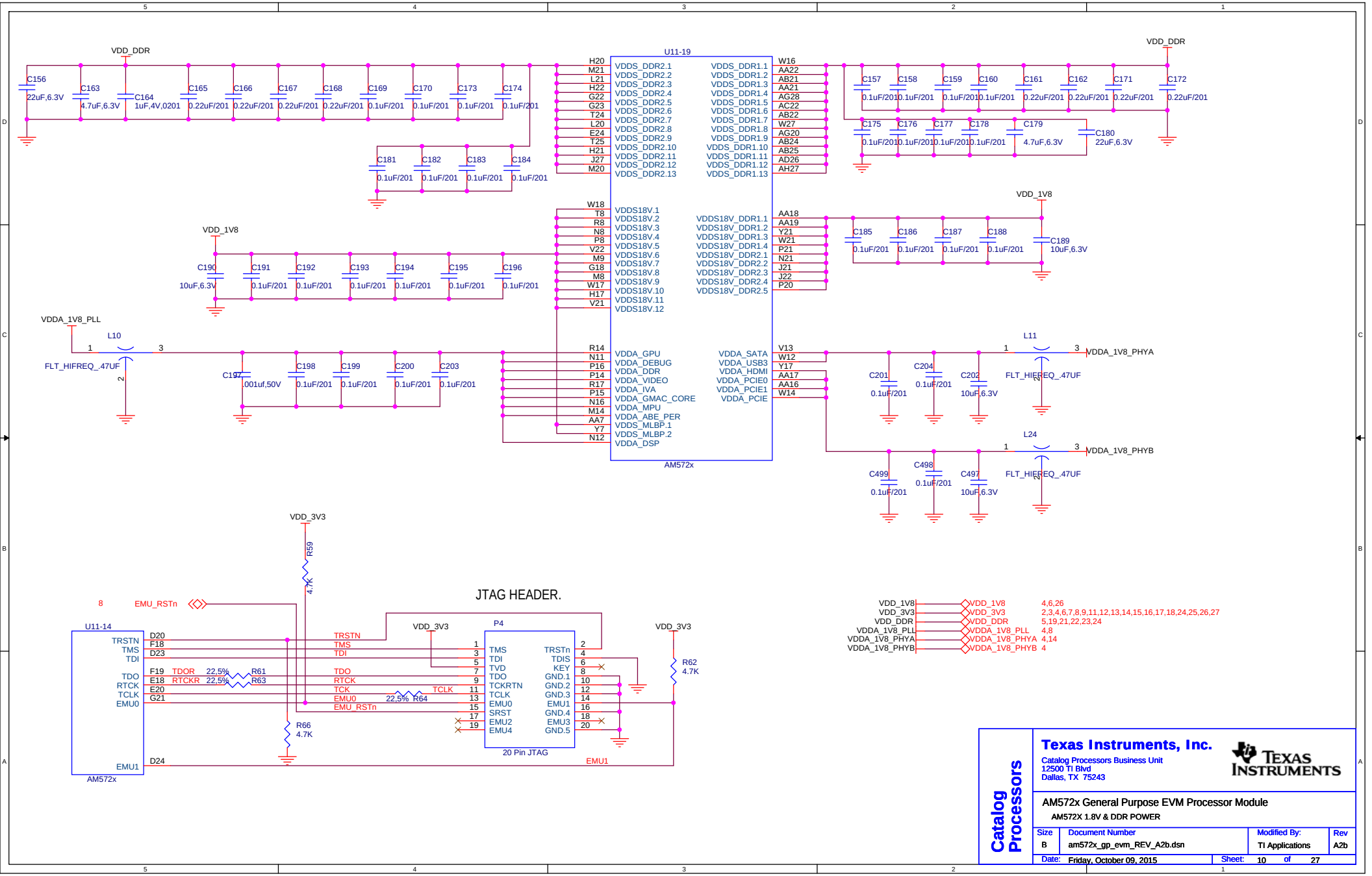
VDD_DDR
U11-19
VDDS_DDR2.1
VDDS_DDR2.2
VDDS_DDR2.3
VDDS_DDR2.4
VDDS_DDR2.5
VDDS_DDR2.6
VDDS_DDR2.7
VDDS_DDR2.8
VDDS_DDR2.9
VDDS_DDR2.10
VDDS_DDR2.11
VDDS_DDR2.12
VDDS_DDR2.13
VDDS_DDR1.1
VDDS_DDR1.2
VDDS_DDR1.3
VDDS_DDR1.4
VDDS_DDR1.5
VDDS_DDR1.6
VDDS_DDR1.7
VDDS_DDR1.8
VDDS_DDR1.9
VDDS_DDR1.10
VDDS_DDR1.11
VDDS_DDR1.12
VDDS_DDR1.13
VDDS18V.1
VDDS18V.2
VDDS18V.3
VDDS18V.4
VDDS18V.5
VDDS18V.6
VDDS18V.7
VDDS18V.8
VDDS18V.9
VDDS18V.10
VDDS18V.11
VDDS18V.12
VDDS18V_DDR1.1
VDDS18V_DDR1.2
VDDS18V_DDR1.3
VDDS18V_DDR1.4
VDDS18V_DDR2.1
VDDS18V_DDR2.2
VDDS18V_DDR2.3
VDDS18V_DDR2.4
VDDS18V_DDR2.5
VDDA_GPU
VDDA_DEBUG
VDDA_DDR
VDDA_VIDEO
VDDA_IVA
VDDA_GMAC_CORE
VDDA_MPU
VDDA_ABE_PER
VDDS_MLBP.1
VDDS_MLBP.2
VDDA_DSP
VDDA_SATA
VDDA_USB3
VDDA_HDMI
VDDA_PCIE0
VDDA_PCIE1
VDDA_PCIE
AM572x
VDD_1V8
VDDA_1V8_PLL
L10
FLT_HIFREQ_.47UF
L11
L24
VDDA_1V8_PHYA
VDDA_1V8_PHYB
VDD_3V3
JTAG HEADER.
U11-14
P4
20 Pin JTAG
EMU_RSTn
TRSTN
TMS
TDI
TDO
RTCK
TCLK
EMU0
EMU1
TDOR
RTCKR
R59
R61
R62
R63
R64
R66
4.7K
22,5%
VDD_1V8 4,6,26
VDD_3V3 2,3,4,6,7,8,9,11,12,13,14,15,16,17,18,24,25,26,27
VDD_DDR 5,19,21,22,23,24
VDDA_1V8_PLL 4,8
VDDA_1V8_PHYA 4,14
VDDA_1V8_PHYB 4
Texas Instruments, Inc.
Catalog Processors Business Unit
12500 TI Blvd
Dallas, TX 75243
Catalog Processors
AM572x General Purpose EVM Processor Module
AM572X 1.8V & DDR POWER
Size B
Document Number am572x_gp_evm_REV_A2b.dsn
Modified By: TI Applications
Rev A2b
Date: Friday, October 09, 2015
Sheet: 10 of 27

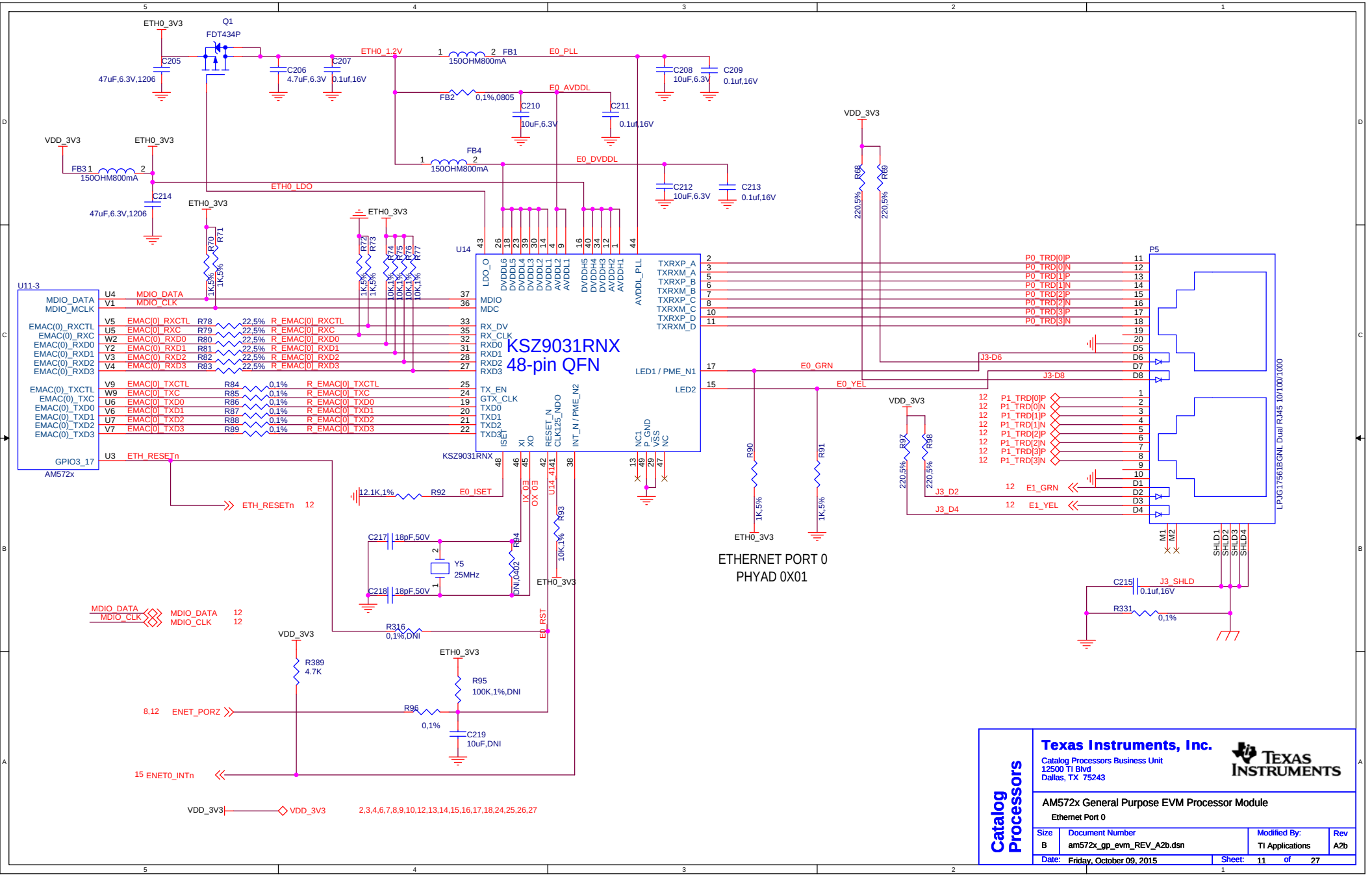
KSZ9031RNX
48-pin QFN
ETHERNET PORT 0
PHYAD 0X01
Texas Instruments, Inc.
Catalog Processors Business Unit
12500 TI Blvd
Dallas, TX 75243
AM572x General Purpose EVM Processor Module
Ethernet Port 0
Size B
Document Number am572x_gp_evm_REV_A2b.dsn
Modified By: TI Applications
Rev A2b
Date: Friday, October 09, 2015
Sheet: 11 of 27
Catalog Processors

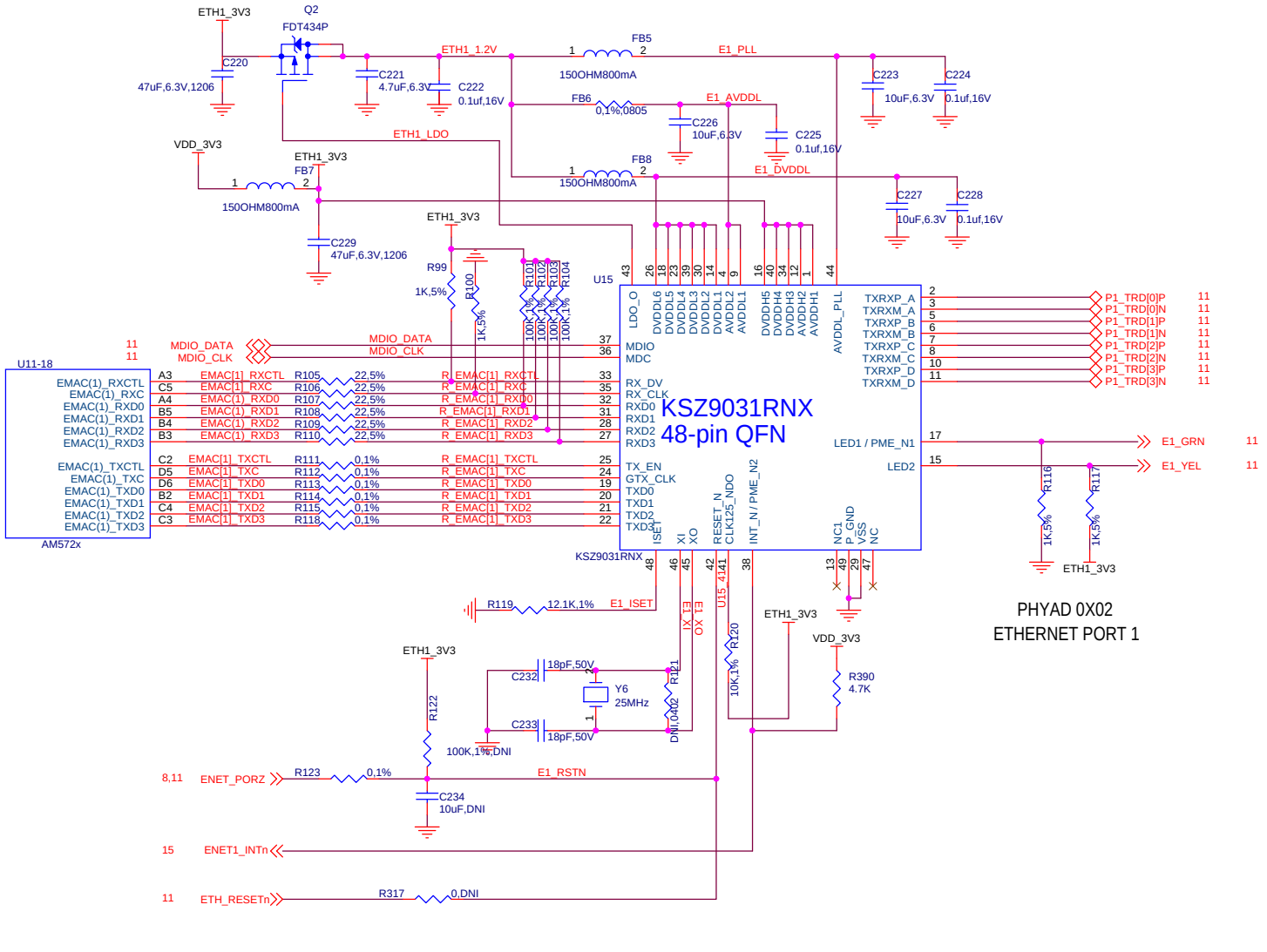

Catalog Processors

Texas Instruments, Inc.
Catalog Processors Business Unit
12500 TI Blvd
Dallas, TX 75243

AM572x General Purpose EVM Processor Module
Ethernet Port 1

Size	Document Number	Modified By:	Rev
B	am572x_gp_evm_REV_A2b.dsn	TI Applications	A2b

Date: Friday, October 09, 2015 Sheet: 12 of 27

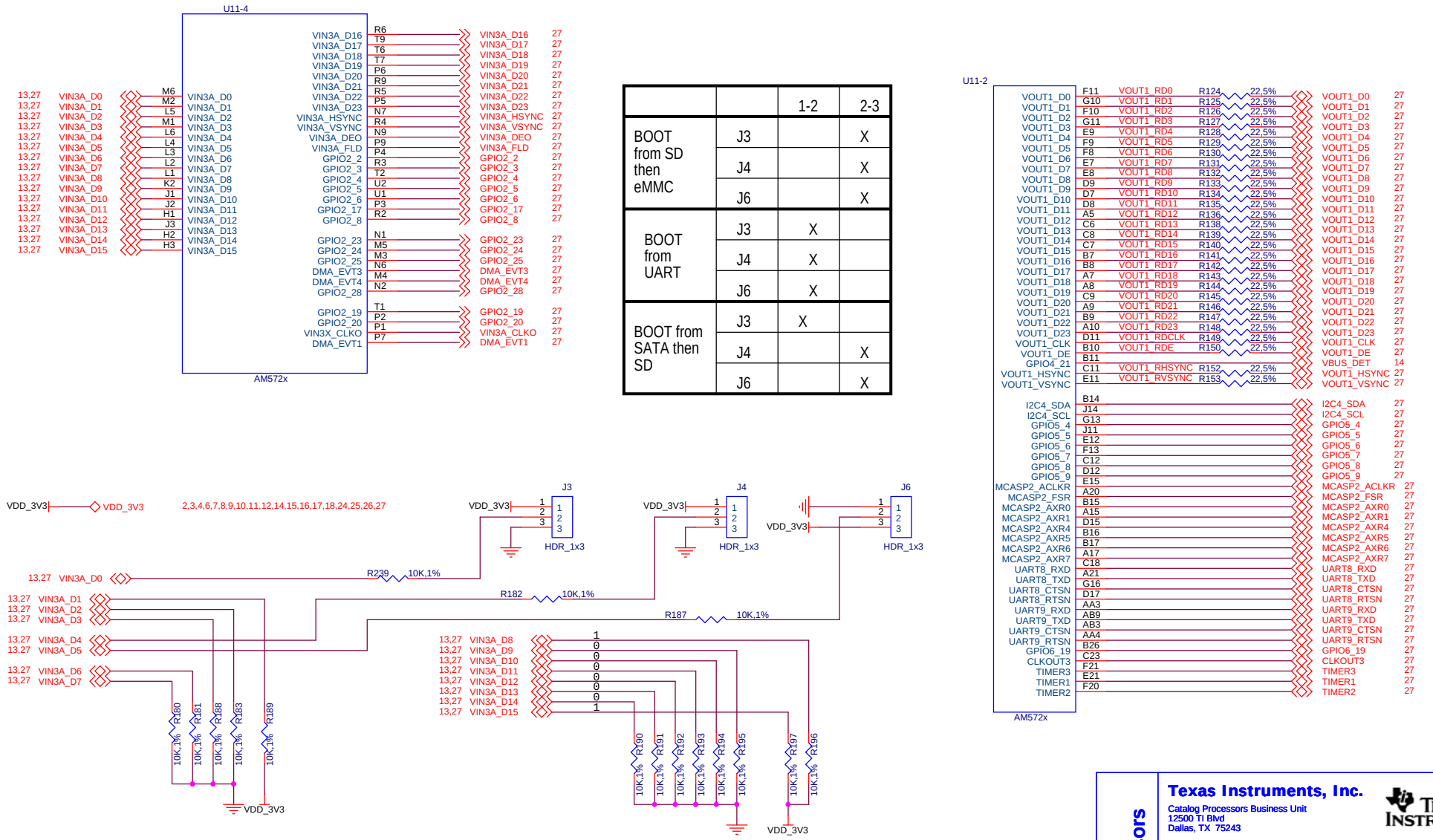

		1-2	2-3
BOOT from SD then eMMC	J3		X
	J4		X
	J6		X
BOOT from UART	J3	X	
	J4	X	
	J6	X	
BOOT from SATA then SD	J3	X	
	J4		X
	J6		X

Texas Instruments, Inc.
Catalog Processors Business Unit
12500 TI Blvd
Dallas, TX 75243

Catalog Processors

AM572x General Purpose EVM Processor Module

I/O LCD and Boot

Size	Document Number	Modified By:	Rev
B	am572x_gp_evm_REV_A2b.dsn	TI Applications	A2b

Date: Friday, October 09, 2015 Sheet: 13 of 27

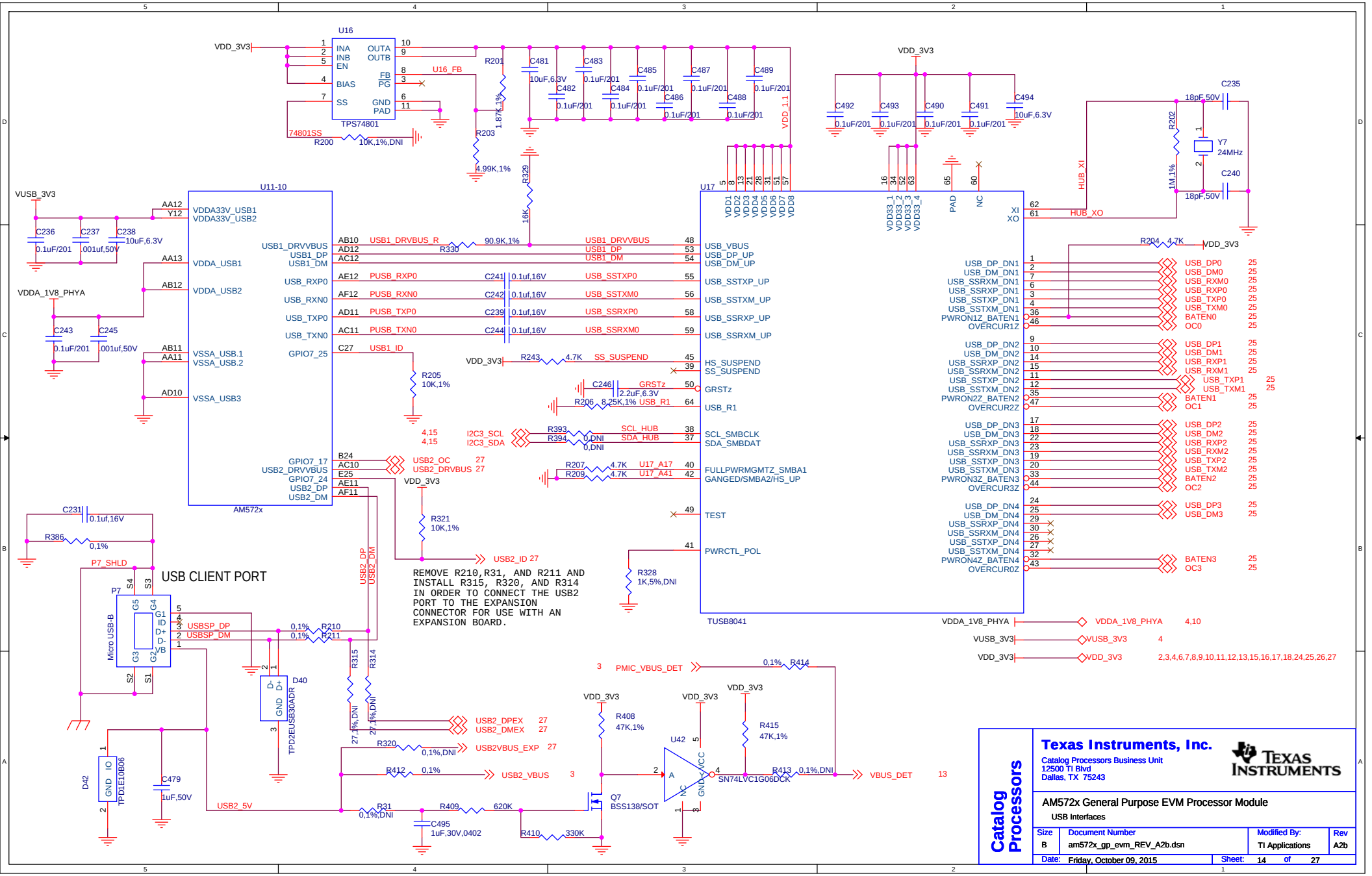
USB CLIENT PORT
REMOVE R210,R31, AND R211 AND INSTALL R315, R320, AND R314 IN ORDER TO CONNECT THE USB2 PORT TO THE EXPANSION CONNECTOR FOR USE WITH AN EXPANSION BOARD.
TUSB8041
AM572x
TPS74801
SN74LVC1G06DCK
Texas Instruments, Inc.
Catalog Processors Business Unit
12500 TI Blvd
Dallas, TX 75243
Catalog Processors
AM572x General Purpose EVM Processor Module
USB Interfaces
Size B
Document Number am572x_gp_evm_REV_A2b.dsn
Modified By: TI Applications
Rev A2b
Date: Friday, October 09, 2015
Sheet: 14 of 27

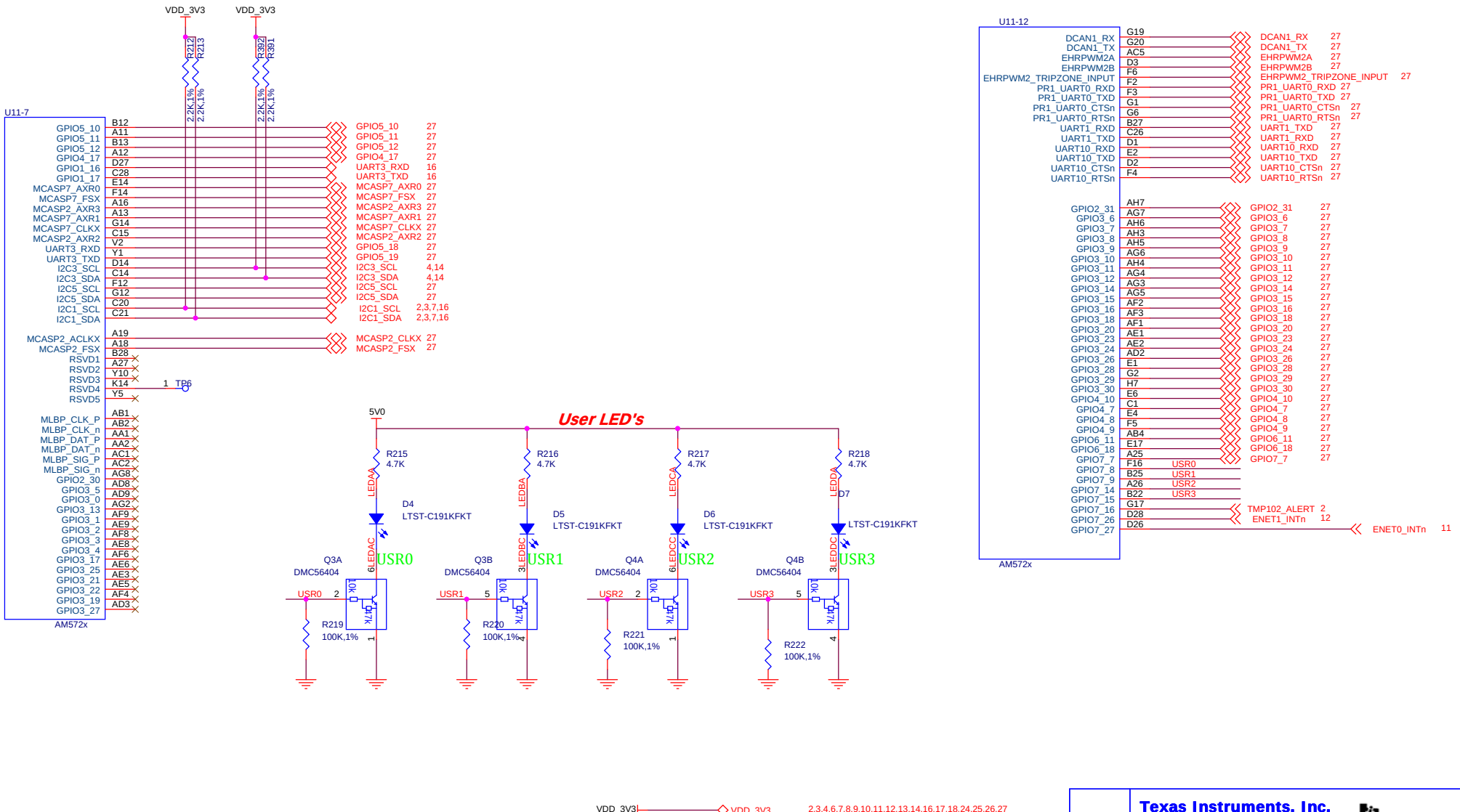

Texas Instruments, Inc.
Catalog Processors Business Unit
12500 TI Blvd
Dallas, TX 75243

Catalog Processors

AM572x General Purpose EVM Processor Module
I/O and LEDs

Size	Document Number	Modified By:	Rev
B	am572x_gp_evm_REV_A2b.dsn	TI Applications	A2b

Date: Friday, October 09, 2015 Sheet: 15 of 27

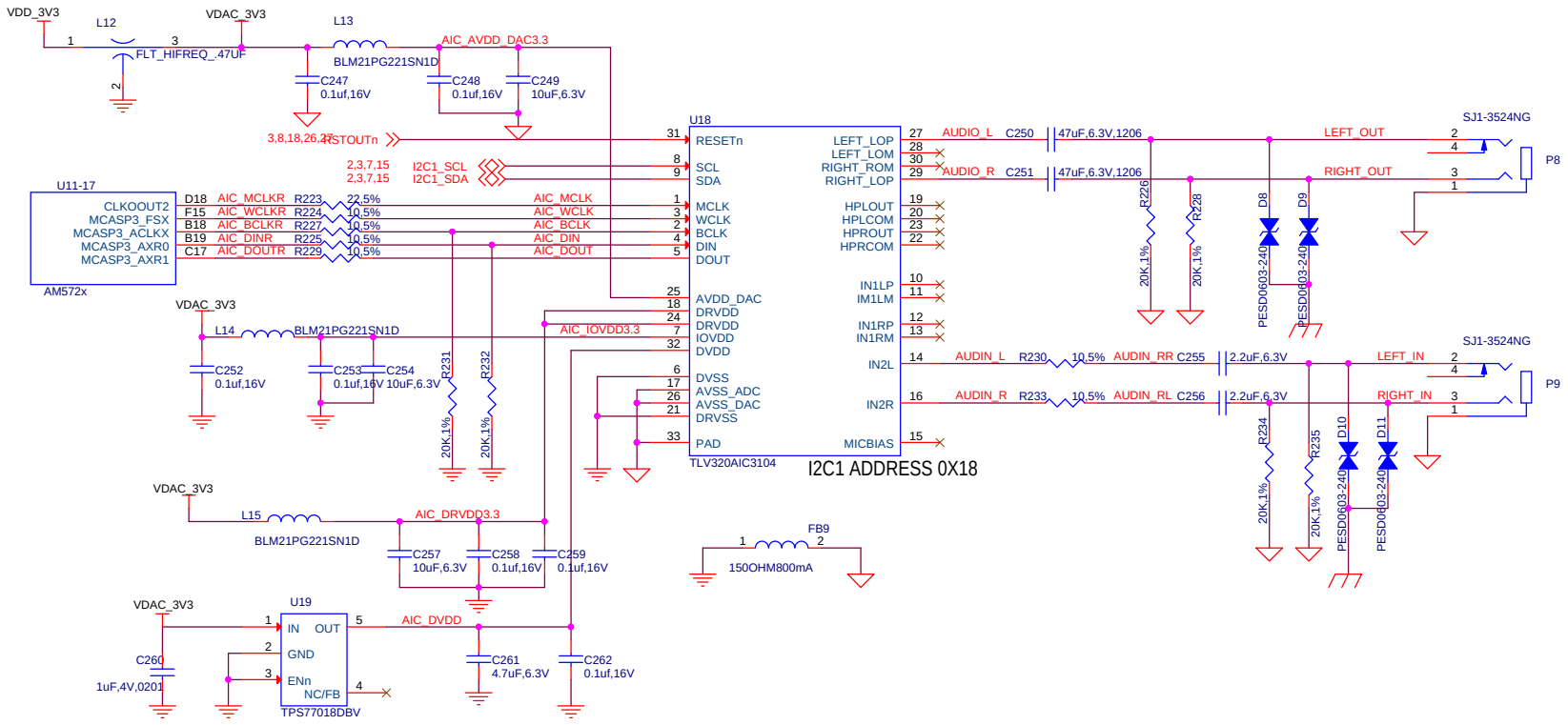

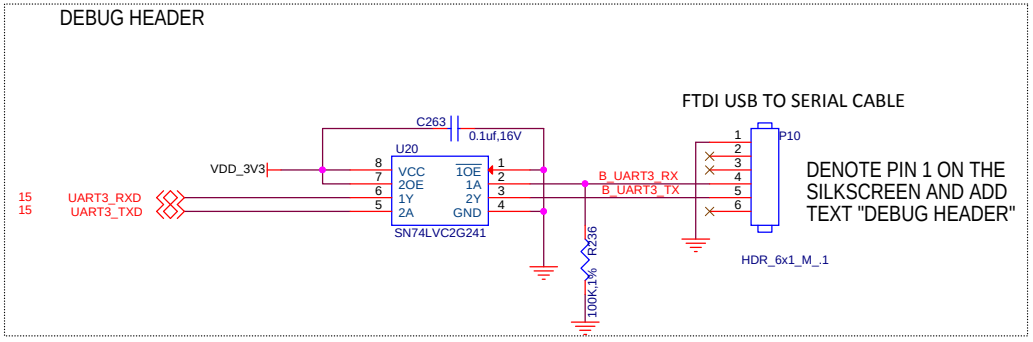

VDD_3V3 — VDD_3V3 2,3,4,6,7,8,9,10,11,12,13,14,15,17,18,24,25,26,27

Catalog Processors

Texas Instruments, Inc.
Catalog Processors Business Unit
12500 TI Blvd
Dallas, TX 75243

TEXAS INSTRUMENTS

AM572x General Purpose EVM Processor Module
Audio CODEC and Debug Port

Size	Document Number	Modified By:	Rev
B	am572x_gp_evm_REV_A2b.dsn	TI Applications	A2b

Date: Friday, October 09, 2015 Sheet: 16 of 27

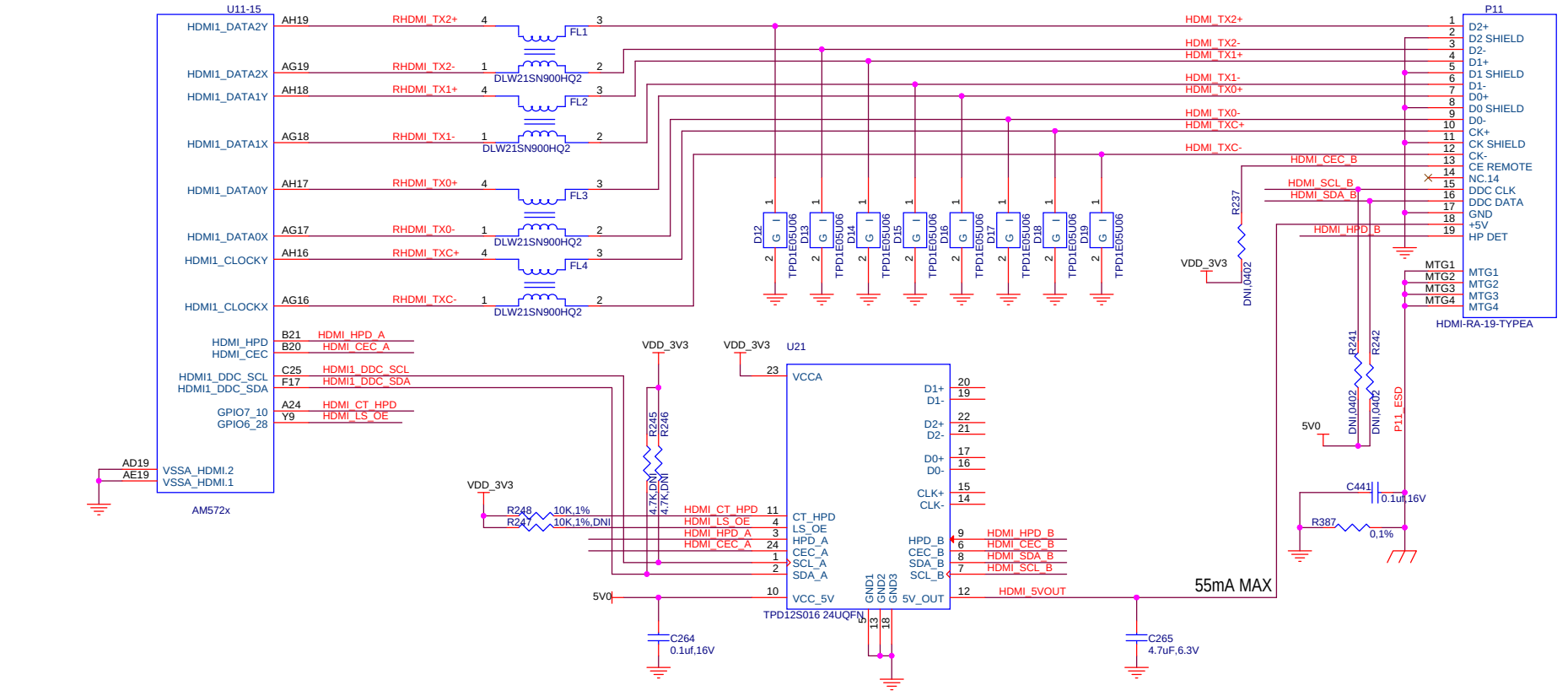

Catalog Processors

Texas Instruments, Inc.
Catalog Processors Business Unit
12500 TI Blvd
Dallas, TX 75243

TEXAS INSTRUMENTS

AM572x General Purpose EVM Processor Module
HDMI Port

Size	Document Number	Modified By:	Rev
B	am572x_gp_evm_REV_A2b.dsn	TI Applications	A2b

Date: Friday, October 09, 2015 Sheet: 17 of 27

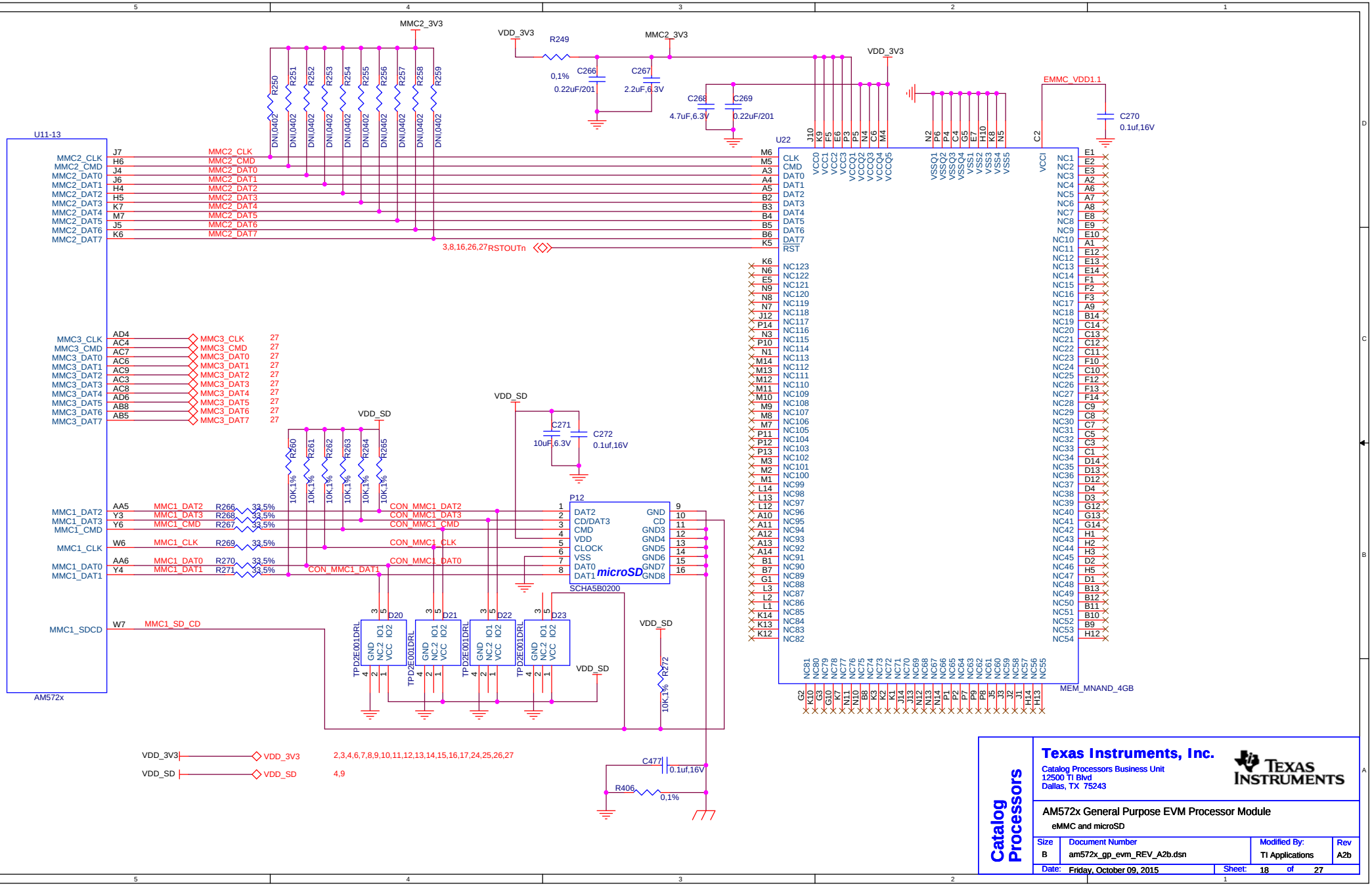

Catalog Processors

Texas Instruments, Inc.
Catalog Processors Business Unit
12500 TI Blvd
Dallas, TX 75243

TEXAS INSTRUMENTS

AM572x General Purpose EVM Processor Module
eMMC and microSD

Size	Document Number	Modified By:	Rev
B	am572x_gp_evm_REV_A2b.dsn	TI Applications	A2b

Date: Friday, October 09, 2015 Sheet: 18 of 27

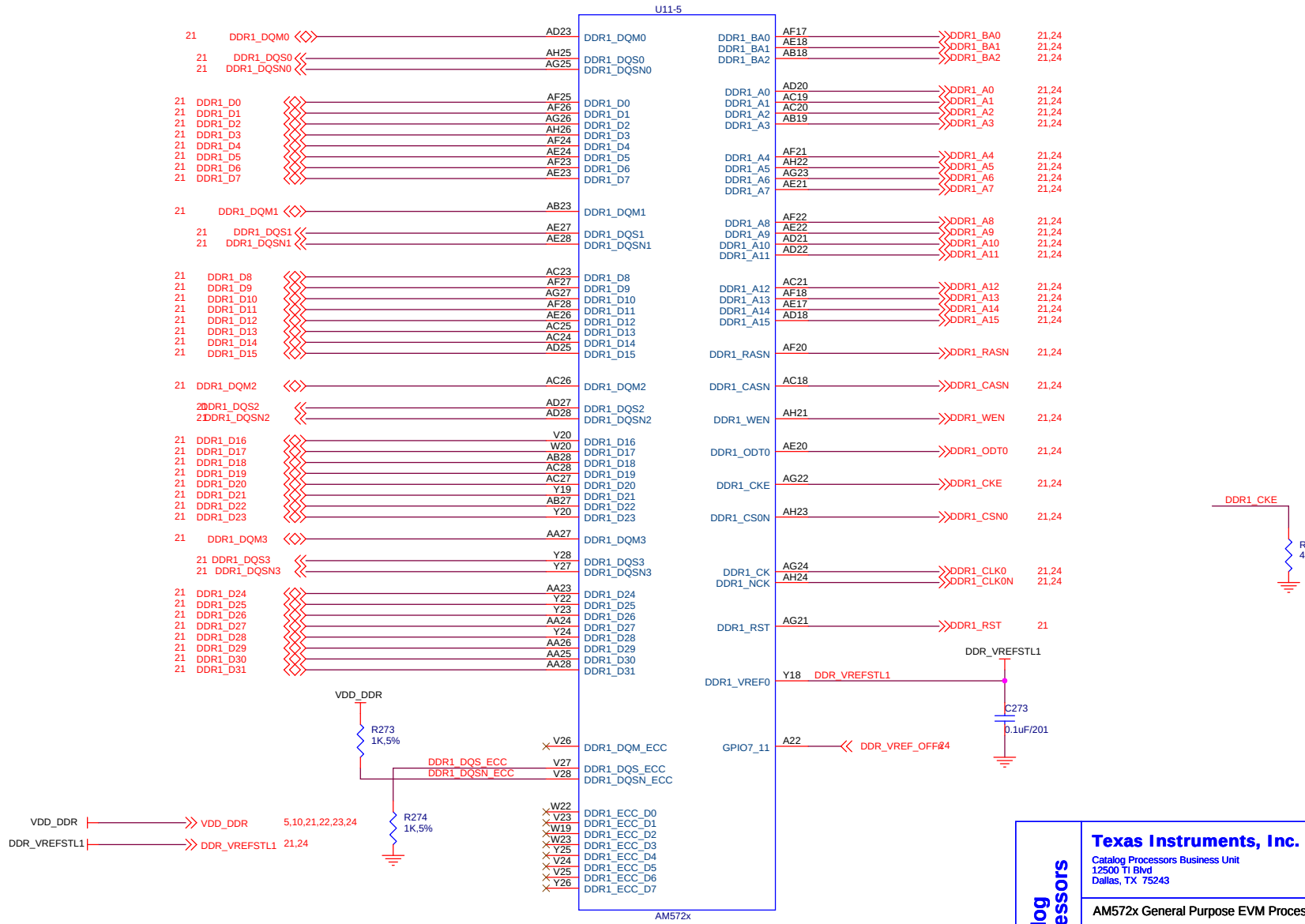

Catalog Processors

Texas Instruments, Inc.

Catalog Processors Business Unit
12500 TI Blvd
Dallas, TX 75243

AM572x General Purpose EVM Processor Module

AM572x DDR3 Interface 1

Size	Document Number	Modified By:	Rev
B	am572x_gp_evm_REV_A2b.dsn	TI Applications	A2b

Date: Friday, October 09, 2015 Sheet: 19 of 27

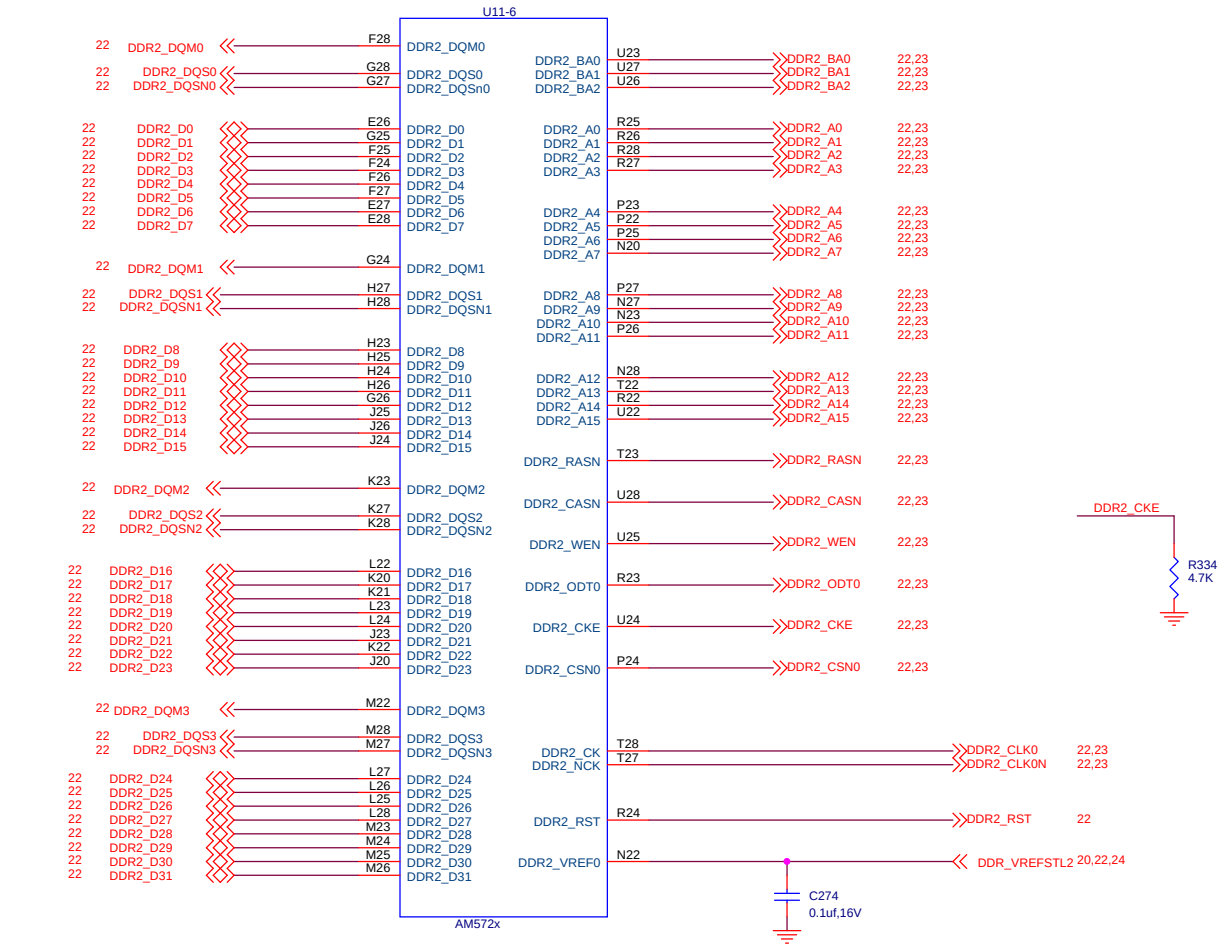

Catalog Processors

Texas Instruments, Inc.

Catalog Processors Business Unit
12500 TI Blvd
Dallas, TX 75243

AM572x General Purpose EVM Processor Module

AM572x DDR3 Interface 2

Size	Document Number	Modified By:	Rev
B	am572x_gp_evm_REV_A2b.dsn	TI Applications	A2b

Date: Friday, October 09, 2015 Sheet: 20 of 27

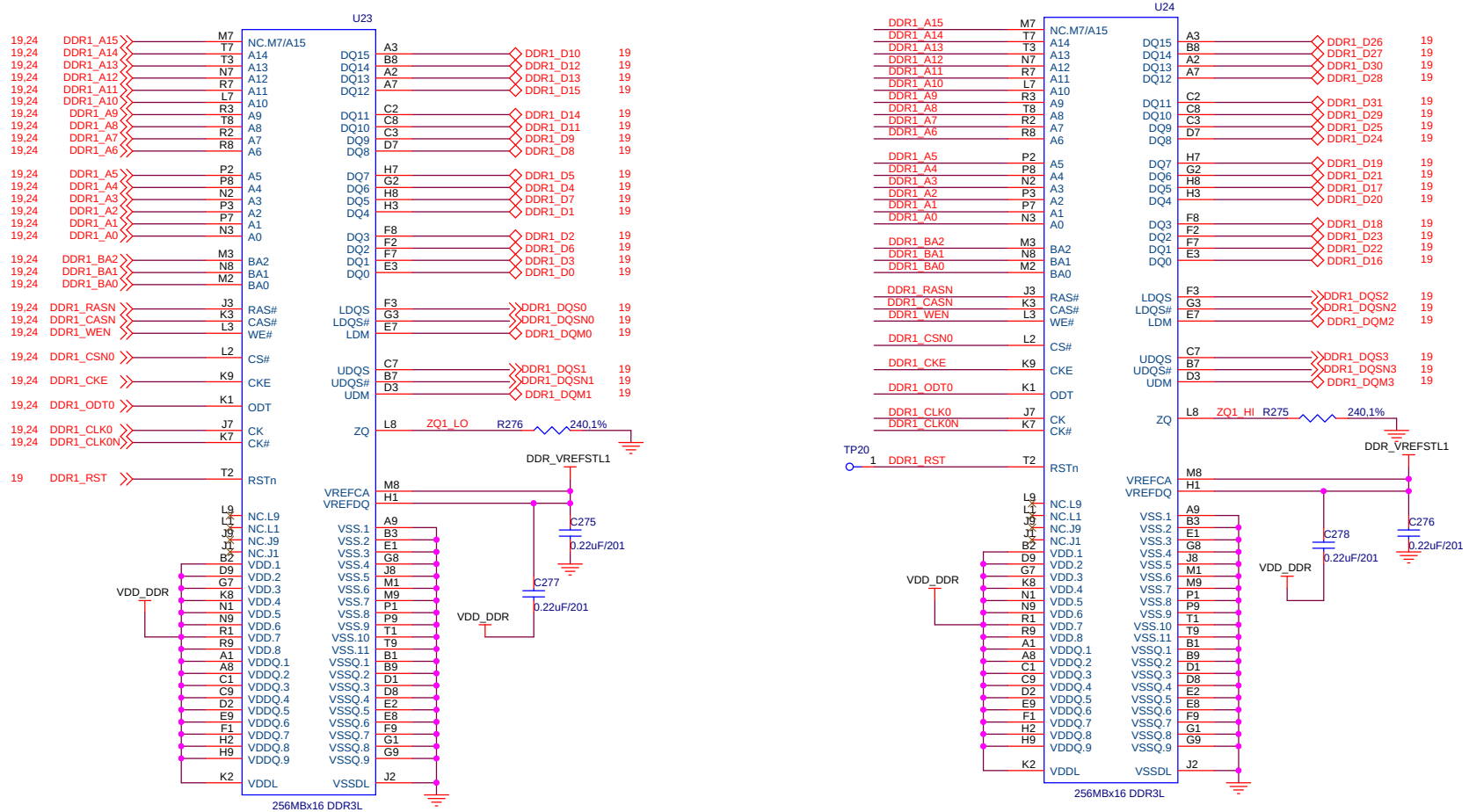

Catalog Processors

Texas Instruments, Inc.
Catalog Processors Business Unit
12500 TI Blvd
Dallas, TX 75243

AM572x General Purpose EVM Processor Module
DDR3 Bank 1

Size	Document Number	Modified By:	Rev
B	am572x_gp_evm_REV_A2b.dsn	TI Applications	A2b

Date: Friday, October 09, 2015 Sheet: 21 of 27

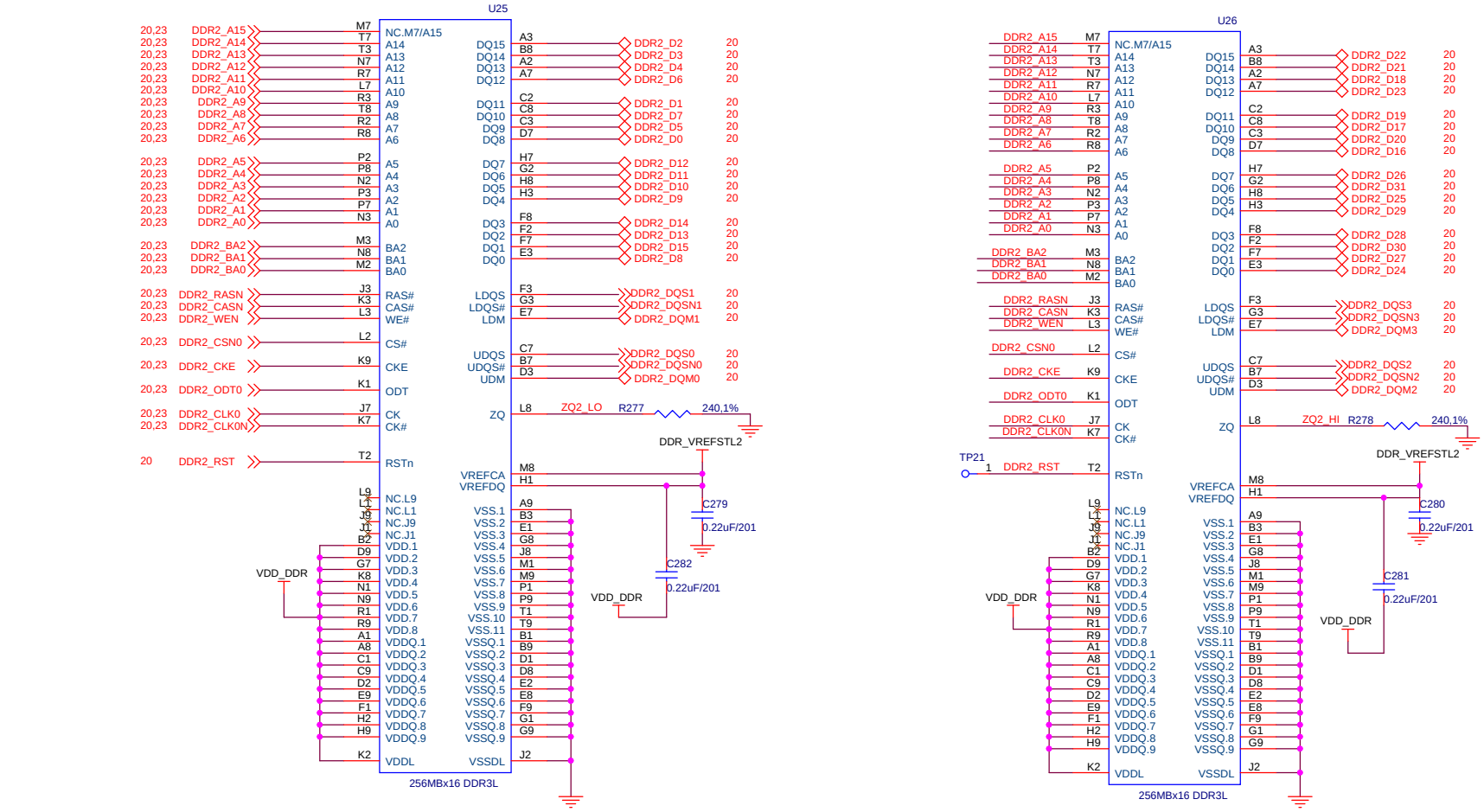

VDD_DDR — VDD_DDR 5,10,19,21,23,24

DDR_VREFSTL2 — DDR_VREFSTL2 20,24

Catalog Processors

Texas Instruments, Inc.
Catalog Processors Business Unit
12500 TI Blvd
Dallas, TX 75243

TEXAS INSTRUMENTS

AM572x General Purpose EVM Processor Module
DDR3 Bank 2

Size	Document Number	Modified By:	Rev
B	am572x_gp_evm_REV_A2b.dsn	TI Applications	A2b

Date: Friday, October 09, 2015 Sheet: 22 of 27

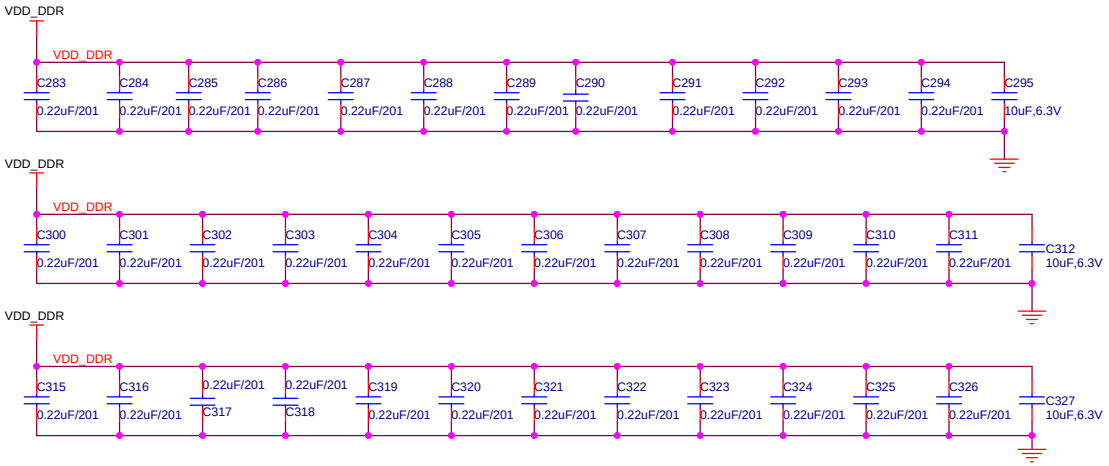

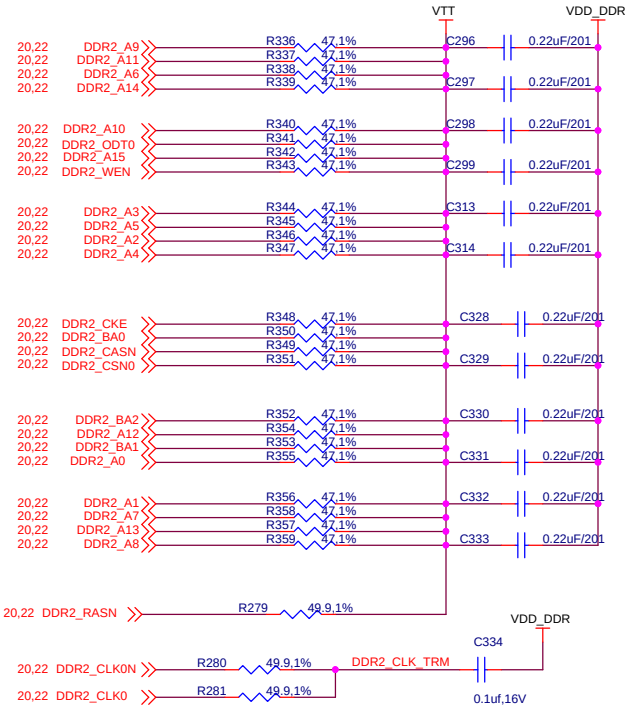

VDD_DDR — VDD_DDR 5,10,19,21,22,24

VTT — VTT 24

Catalog Processors

Texas Instruments, Inc.

Catalog Processors Business Unit
12500 TI Blvd
Dallas, TX 75243

TEXAS INSTRUMENTS

AM572x General Purpose EVM Processor Module

DDR3 BANK 2 CAPS AND TERMINATIONS

Size	Document Number	Modified By:	Rev
B	am572x_gp_evm_REV_A2b.dsn	TI Applications	A2b

Date: Friday, October 09, 2015 Sheet: 23 of 27

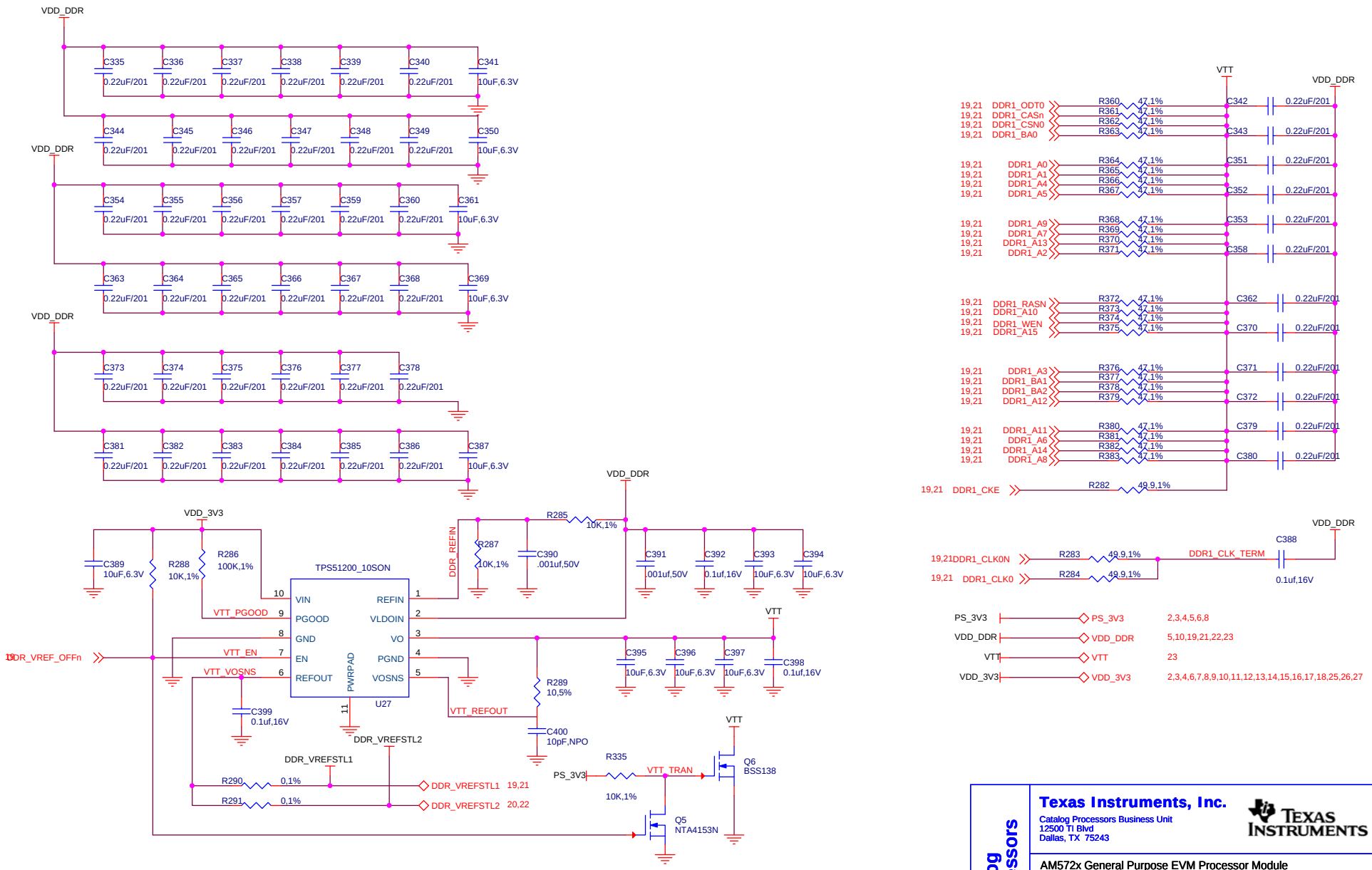

Catalog Processors

Texas Instruments, Inc.
Catalog Processors Business Unit
12500 TI Blvd
Dallas, TX 75243

TEXAS INSTRUMENTS

AM572x General Purpose EVM Processor Module
DDR3 BANK 1 CAPS AND TERMINATIONS

Size	Document Number	Modified By:	Rev
B	am572x_gp_evm_REV_A2b.dsn	TI Applications	A2b

Date: Friday, October 09, 2015 Sheet: 24 of 27

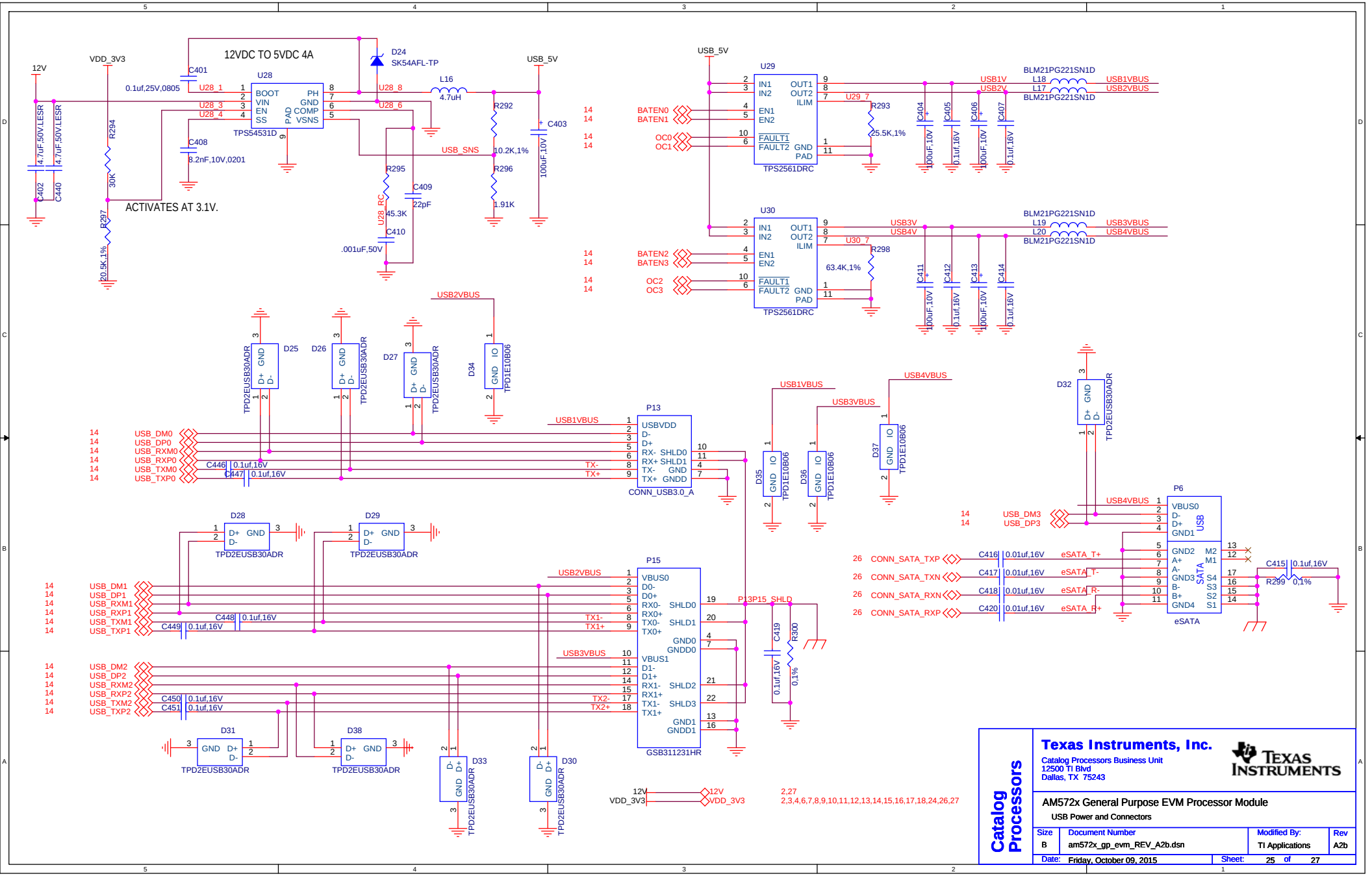

Preliminary Information - Subject to change

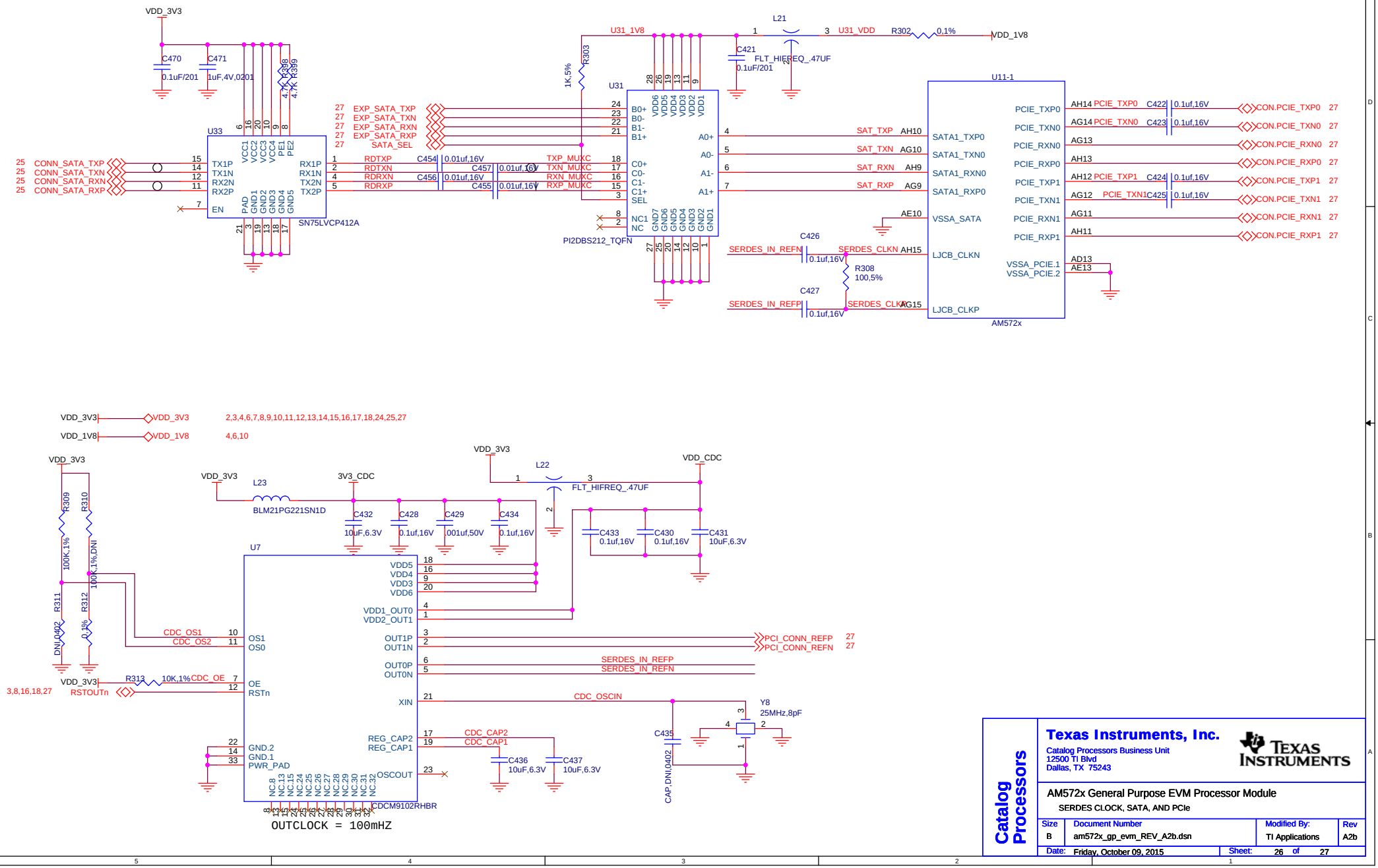

Catalog Processors

Texas Instruments, Inc.
Catalog Processors Business Unit
12500 TI Blvd
Dallas, TX 75243

AM572x General Purpose EVM Processor Module
SERDES CLOCK, SATA, AND PCIe

Size	Document Number	Modified By:	Rev
B	am572x_gp_evm_REV_A2b.dsn	TI Applications	A2b

Date: Friday, October 09, 2015 Sheet: 26 of 27

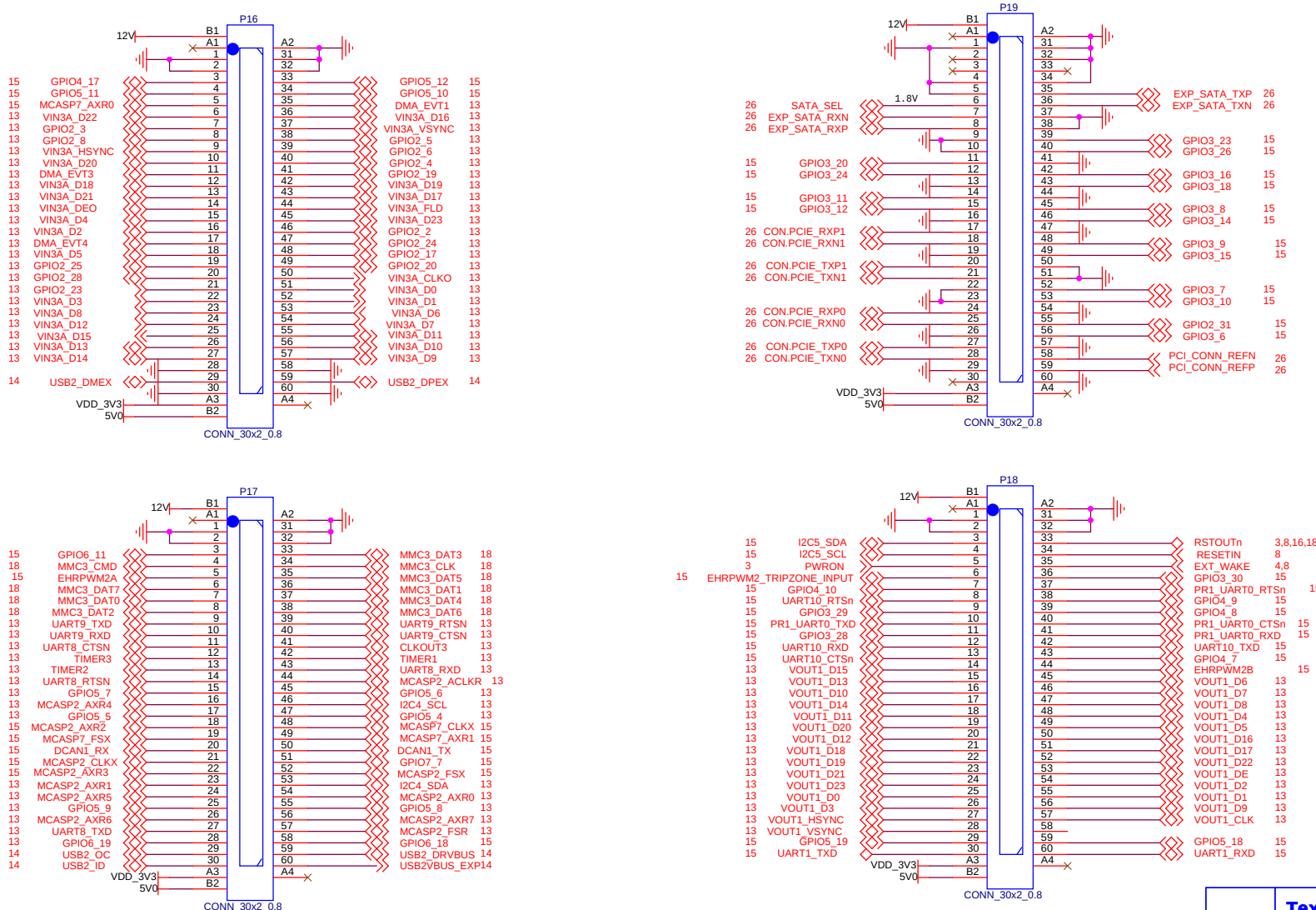

Catalog Processors

Texas Instruments, Inc.

Catalog Processors Business Unit
12500 TI Blvd
Dallas, TX 75243

TEXAS INSTRUMENTS

AM572x General Purpose EVM Processor Module

SERDES CLOCK, SATA, AND PCIe

Size	Document Number	Modified By:	Rev
B	am572x_gp_evm_REV_A2b.dsn	TI Applications	A2b

Date: Friday, October 09, 2015 Sheet: 27 of 27