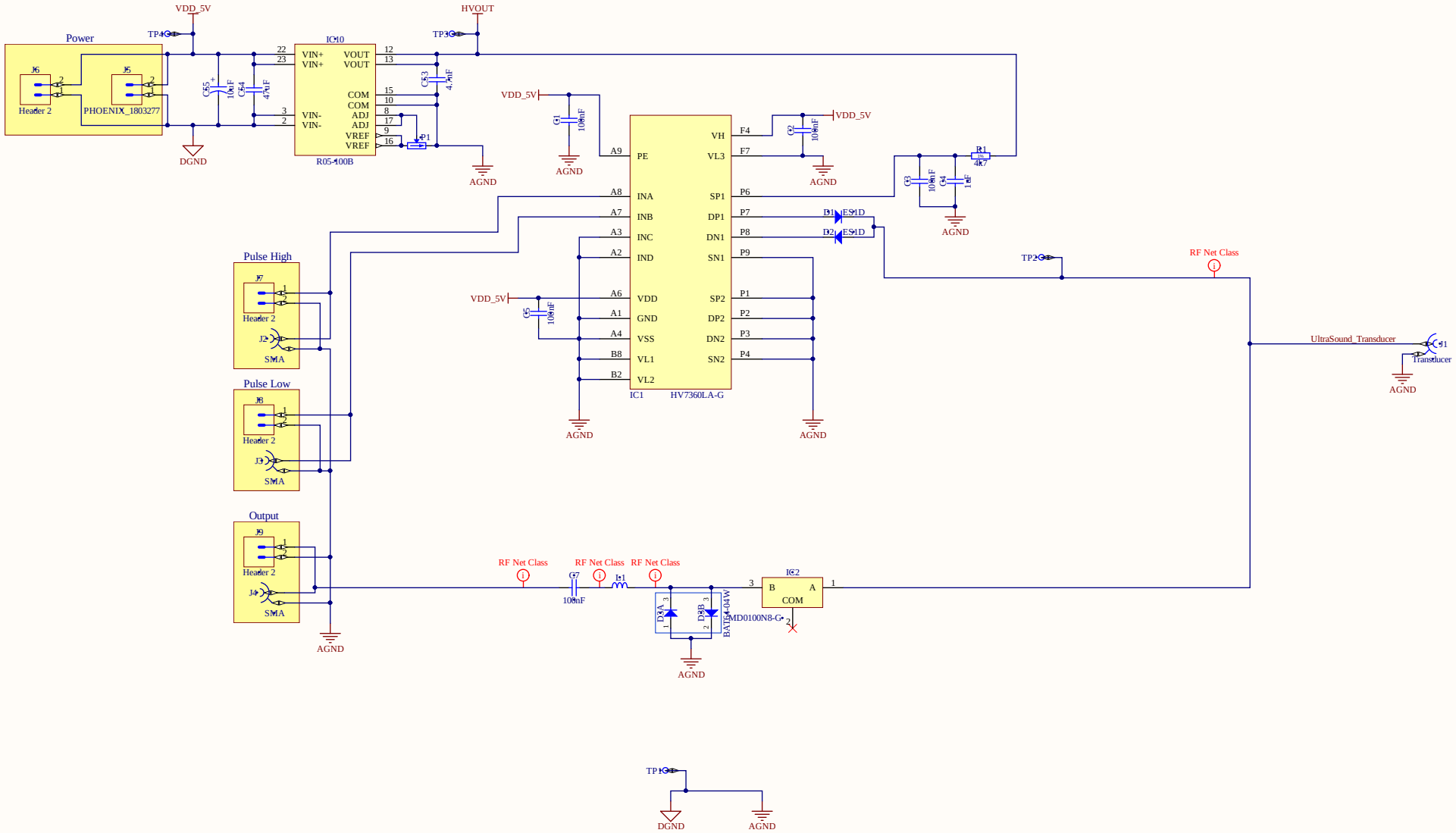

HV+Pulser Board	
Description: UltraSound Pulser	
File Name: 1.SchDoc	
Date: 1/25/2016	Designer: Sofian Jafar
Size: A3	Reviewed By: *
Rev: 1.0	
Project: echOpen_HV+Pulser_Board.PrjPcb	Sheet 1 / 1