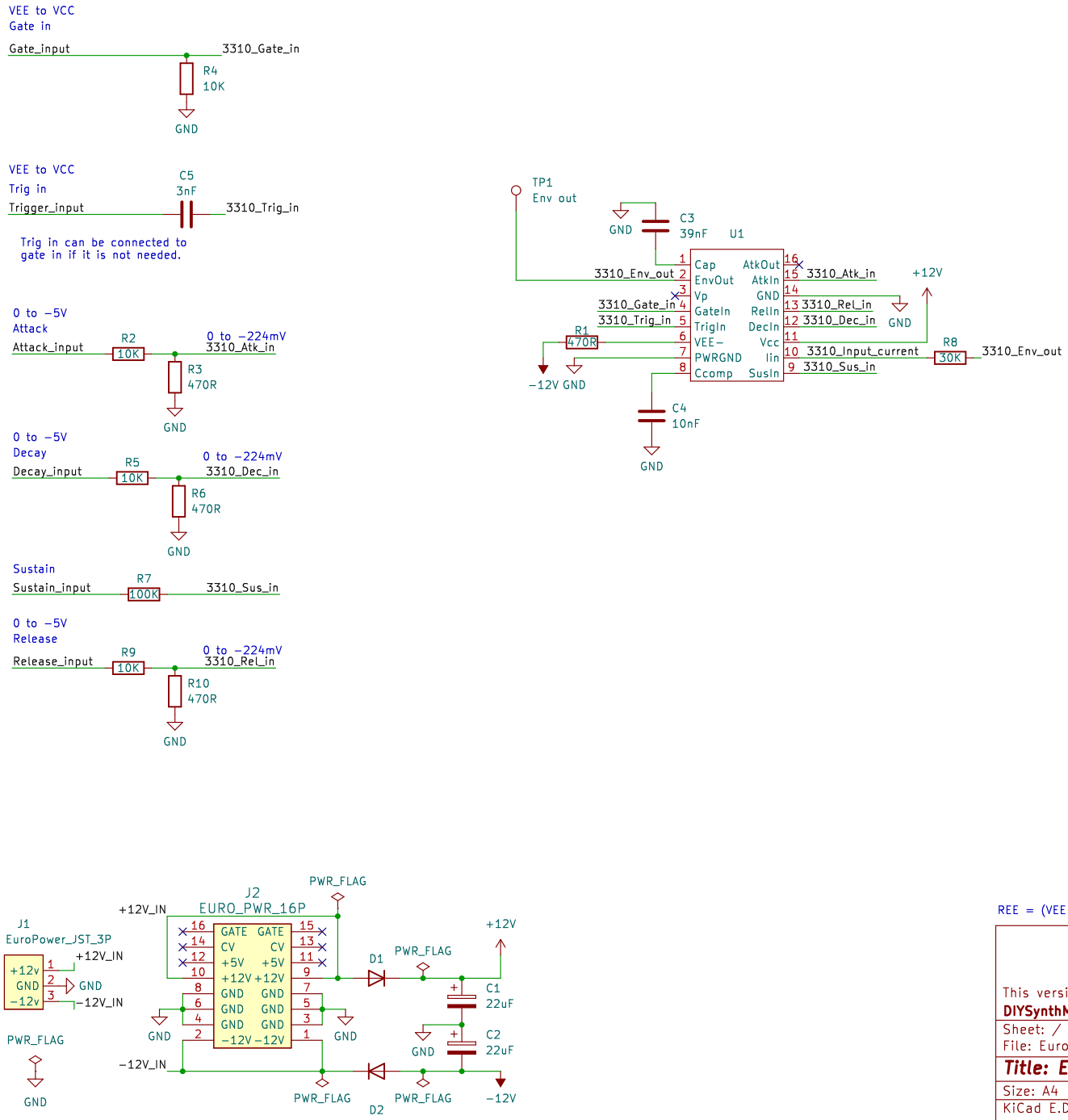

REE = (VEE − 7.5)/0.010

This version is a prototype

DIYSynthMNL

Sheet: /

File: Eurorack−3310−ADSR.kicad_sch

Title: Eurorack AS3310 ADSR

Size: A4	Date: 2024−02−03	**Rev: 0.1.0**
KiCad E.D.A. kicad 7.0.9		Id: 1/1