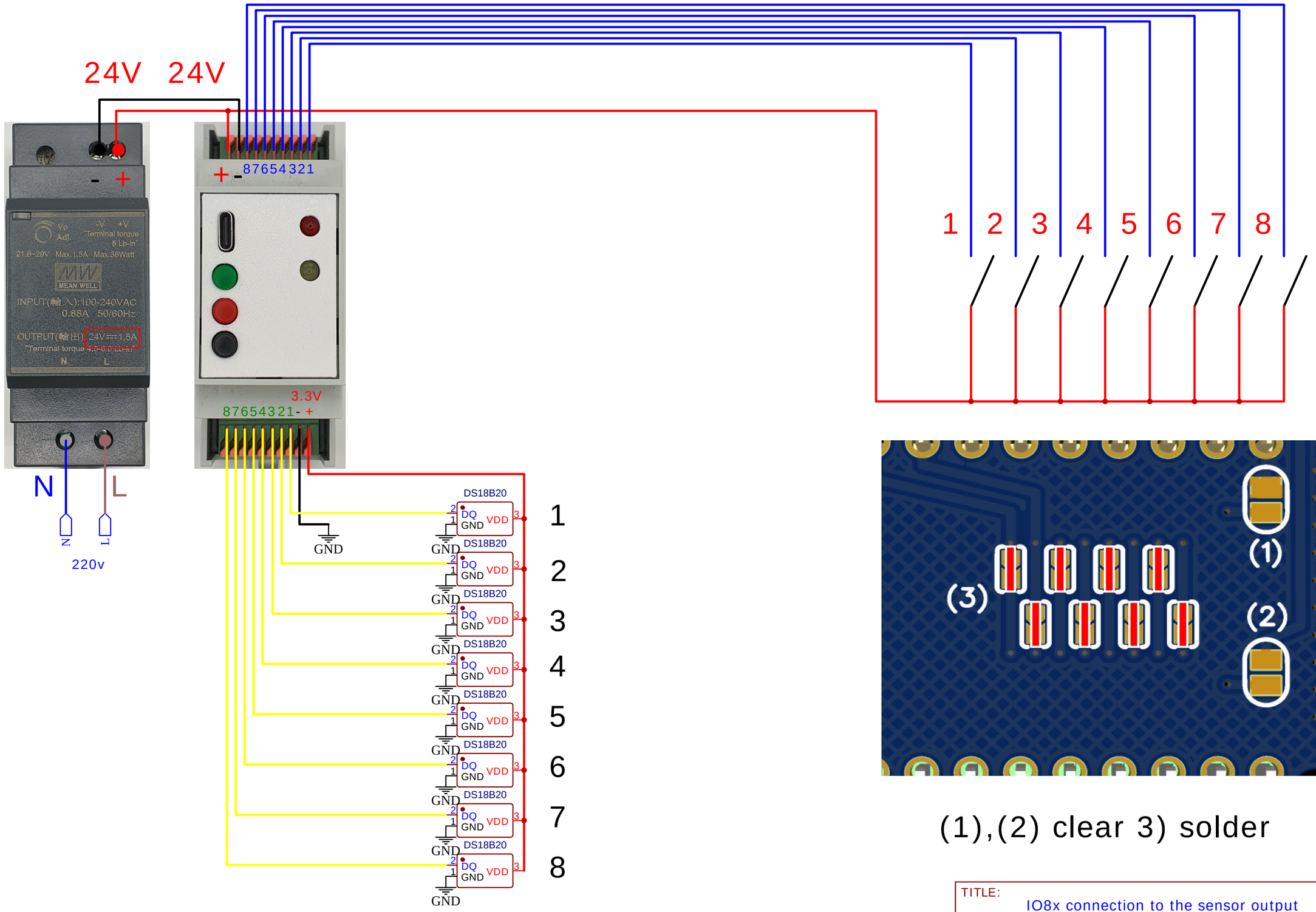

(1),(2) clear 3) solder

TITLE: IO8x connection to the sensor output		REV: 1.0
EasyEDA	Company: DIY&Zi	Sheet: 1/1
	Date: 2025-09-29 Drawn By: @Novgorod_DIYZi	