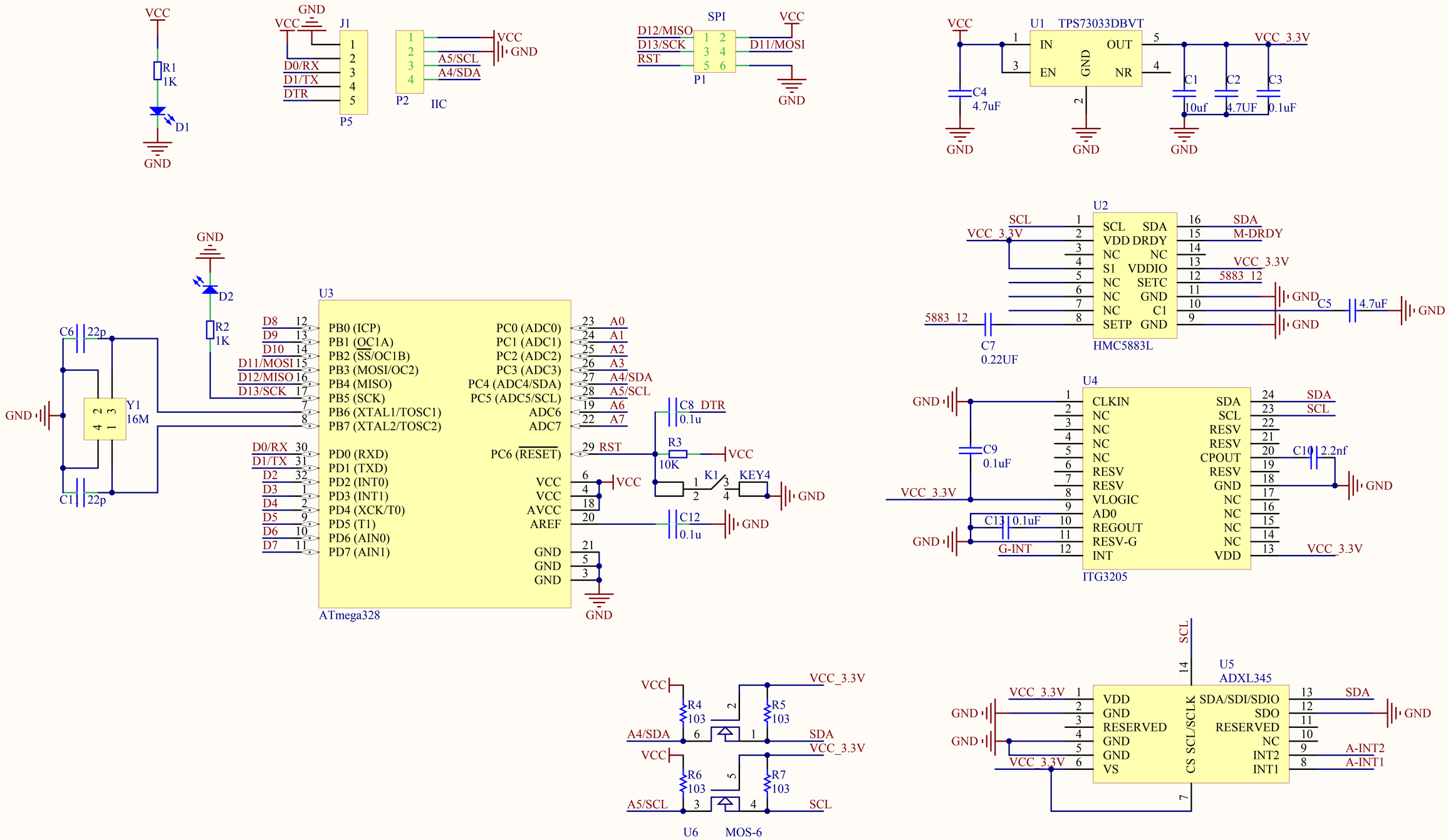


| Title | | |
|---|---|---|
| Size A4 | Number | Revision |
| Date: 2012/9/6 | | Sheet of |
| File: I:\ \..\AVR 328.SchDoc | | Drawn By: |