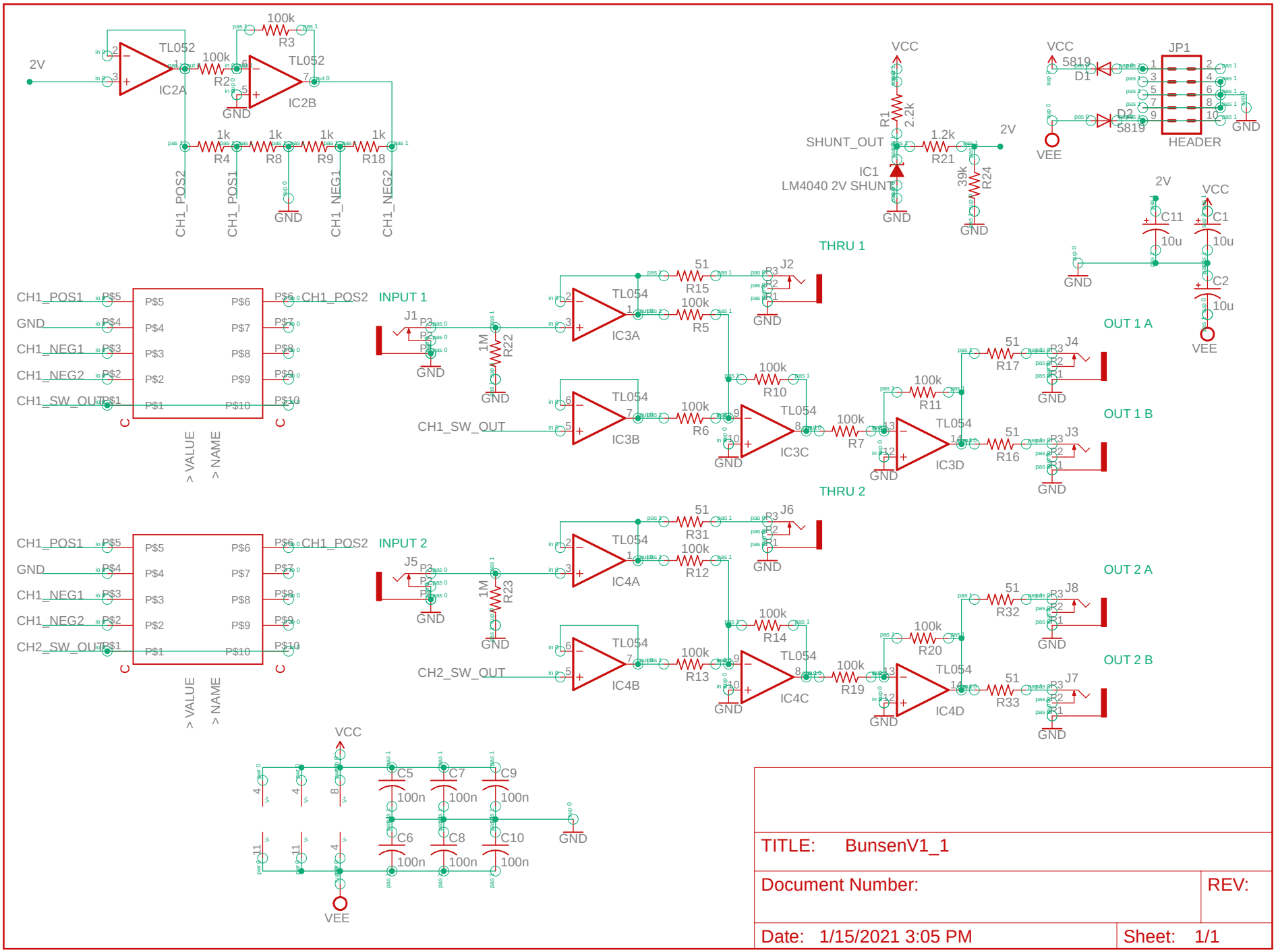

TITLE: BunsenV1_1

Document Number:

REV:

Date: 1/15/2021 3:05 PM

Sheet: 1/1