A

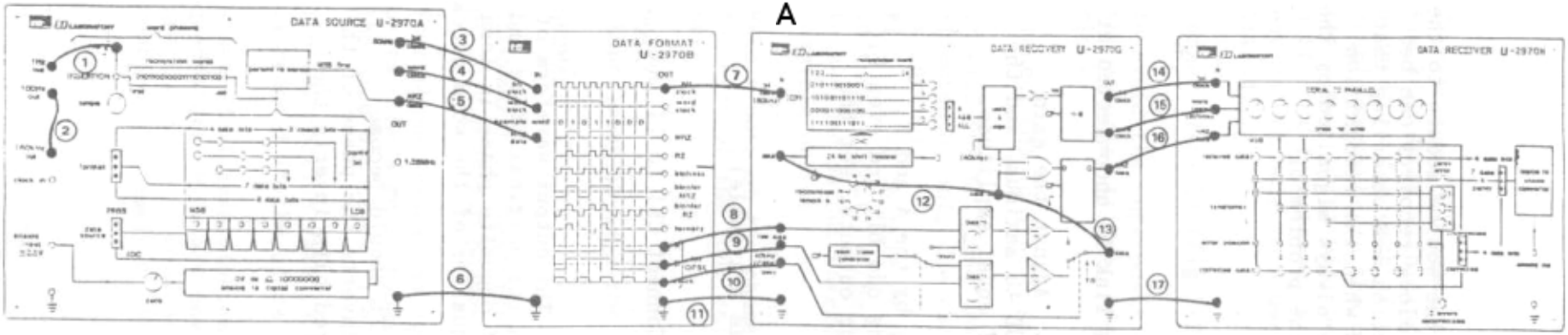
DATA SOURCE U-2970A
DATA FORMAT U-2970B
DATA RECEIVER U-2970G
DATA RECEIVER U-2970H

B

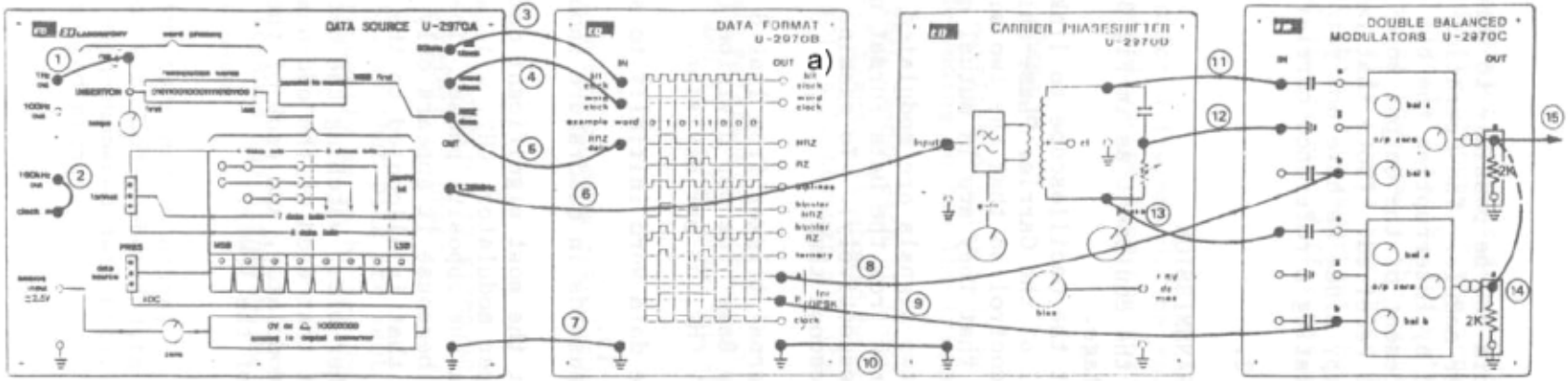
DATA SOURCE U-2970A
DATA FORMAT U-2970B
a)
CARRIER PHASESHIFTER U-2970D
DOUBLE BALANCED MODULATORS U-2970C