48783

Radio-Electronics

SPECIAL SECTION COMPUTER DIGEST

$1.75 NOV. 1984
IN CANADA $2.25

COMPUTERS - VIDEO - STEREO - TECHNOLOGY - SERVICE

NEW! 3-COLOR LCD DISPLAY.

New LCD technology displays 3 primary colors. Here's a look at how it works.

SATELLITE-TV SYSTEM BUYER'S GUIDE.

A look at what's available in complete turnkey systems.

WARC-84.

A detailed report by an American delegate to the World Administrative Radio Conference held in Geneva.

BUILD R-E'S TELE TOLL TIMER.

Easy to build add-on for your telephone automatically times your calls.

DESIGNING WITH LINEAR IC'S.

An in-depth look at isolation and logarithmic amplifiers.

GERNSBACK

PLUS:

- ★ Equipment Reports
- ★ Drawing Board
- ★ Designers Notebook
- ★ Service Clinic
- ★ New Idea
- ★ State-Of-Solid-State

www.americanradiohistory.com

SS-5705, THE ALL-NEW 3-INPUT 6-TRACE 40 MHz OSCILLOSCOPE FROM IWATSU

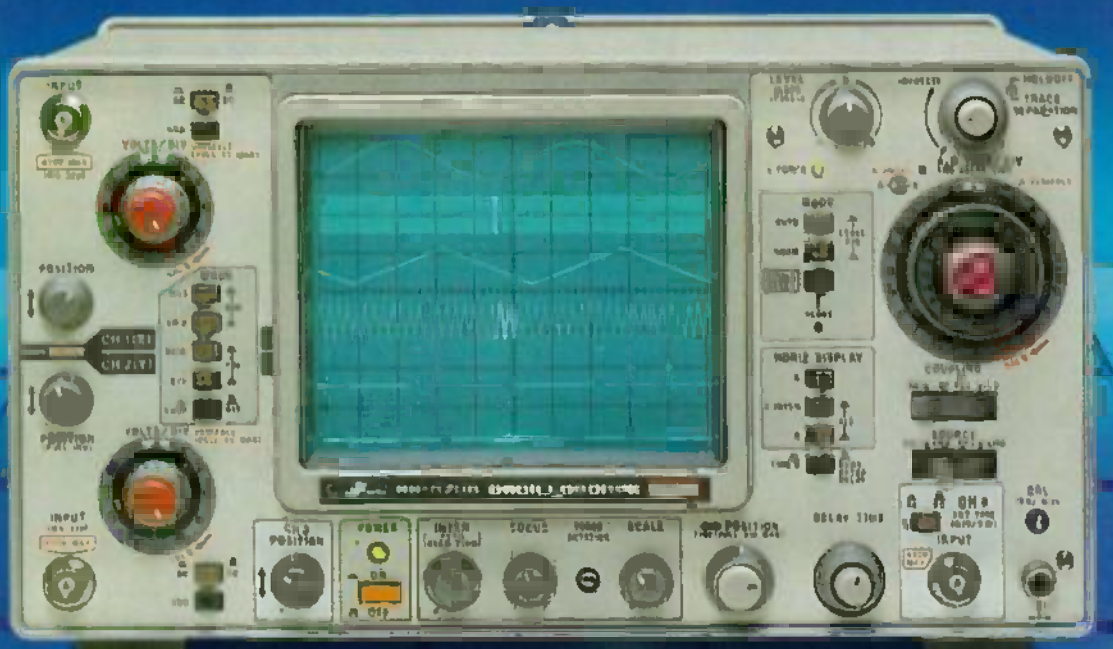

DC to 40 MHz

- **H and V axes accurate to within ±2 %**
- **CRT with 12 kV accelerating voltage for bright traces**
- **Three input channels, six traces**: an enlarged delayed sweep waveform can be displayed for each channel for a total of 6 simultaneous traces. Each channel has its own position control.
- **Maximum delay jitter of 1/20,000**
- **Fastest sweep rate of 10 ns/div**
- **Jitterless circuitry** for stable high frequency signals observation.
- **High sensitivity**: 1 mV/div
- **CH 1 signal output**: 50 mV/div (into 50 Ω)
- **High-stability calibrator** with frequency and voltage accurate to within ±1 %.
- **Stable observation of video signals possible**
- **Traces do not shift when the attenuator is switched**
- **Pushbutton controls** for easier operability and improved reliability.
- **Accuracy guaranteed** in temperatures ranging from 10 to 35°C (50 to 95°F).
- **Variable holdoff** for triggering when observing complicated waveforms.
- **FIX triggering**
- **Beam finder**

- **Frequency response extends beyond 40 MHz rating**
- **Superb trigger sensitivity** freezes even low level signals.

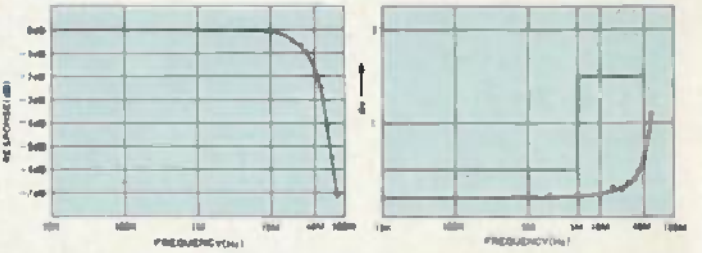

- **Single sweep**: essential if waveforms are to be photographed.
- **Trace rotation control** allows compensation for inclination of traces due to terrestrial magnetism.
- **Two probes provided as standard accessories**: both switchable between 10:1 and 1:1.
- **Wide range of optional extras** for more diverse applications.
- **Compact and lightweight**: 282W x 152H x 403D mm (11-1/8" x 6" x 15-7/8"), 7.2 kg (15.9 lbs).

IWATSU INSTRUMENTS INC.
430 Commerce Boulevard, Carlstadt, NJ 07072 Phone: (201) 935-5220 TLX: 7109890255

CIRCLE 51 ON FREE INFORMATION CARD

www.americanradiohistory.com

KENWOOD

...pacesetter in amateur radio

R-11 portable receiver

R-11

Kenwood's R-11 is the perfect "go anywhere" portable receiver. It covers the standard AM and FM Broadcast bands, plus nine additional short wave bands. The R-11's selectivity is greatly enhanced by the use of double-conversion on short wave frequencies above 5.95-MHz. High sensitivity coupled with a dual antenna system (telescopic and ferrite bar) allow it to reach out and bring in those distant stations from all over the world.

Simplicity of operation is enhanced by a band-spread type tuning control. Electronic band switching, with LED band indicator, along with a tuning meter to indicate received signal strength, combine to provide you with superior listening capability. Safety Hold-Release switch prevents accidental station loss. Large front mounted speaker provides excellent sound quality. Tone switch adjusts for high, low and voice transmission.

Optional HS-7 micro-head phones allow for private listening pleasure.

All this along with a record output jack, external antenna terminal and a rugged and attractive carrying case make the R-11 portable receiver the perfect travel companion!

More information on the Kenwood receivers is available from authorized dealers of Trio-Kenwood Communications 1111 West Walnut Street, Compton, CA 90220.

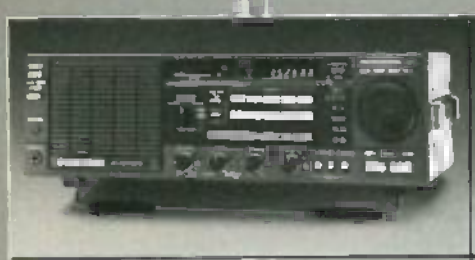

R-2000 Top-of-the-line general coverage receiver • 150 kHz to 30 MHz • Ten memories • Dual 24-hr clock with timer • Scanning • 100-240 VAC (Opt.13.8 VDC) • Opt.VHF (118-174 MHz converter).

R-1000 High performance receiver • 200 kHz – 30 MHz • digital display/clock/timer • 3 IF filters • PLL UP conversion • noise blanker • RF step attenuator • 120-240 VAC (Optional 13.8 VDC).

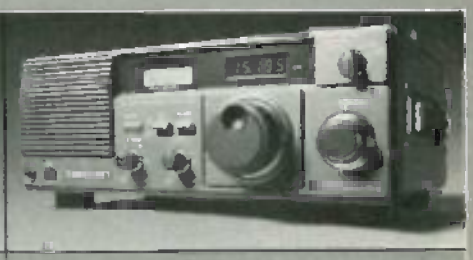

R-600 General coverage receiver • 150 kHz – 30 MHz • digital display • 2 IF filters • PLL UP conversion • noise blanker • RF attenuator • front speaker • 100-240 VAC (Optional 13.8 VDC).

CIRCLE 94 ON FREE INFORMATION CARD

www.americanradiohistory.com

The best-looking way to keep your TV performing up to par may be right here before your eyes!

CHROMATENNA T.M.

Antennas

What an eyeful! All six of these Zenith Chromatenna indoor antennas! So handsome, each in its own way, you'll swear we paid a designer's fee. But we didn't.

Now, look close and picture for yourself how well any one will adapt to your decor and actually add what appears to be a decorator's touch to a room interior.

That's why we refer to these Zenith Chromatenna models as "America's First Family of Indoor Antennas."

We think you, too, will be equally generous with your praises when you price them at your Zenith dealer's.

And chances are any one of these beautiful, top-performing Zenith indoor antennas could be the easiest, fastest, and most reasonably-priced way to keep your TV set performing up to par.

Be sure to see them all at your Zenith dealer's soon – certainly before trying to improve your TV's performance with a no-name indoor antenna!

Zenith Sales Company / Service, Parts & Accessories Division / 11000 Seymour Avenue / Franklin Park, Illinois 60131

www.americanradiohistory.com

NOVEMBER 84

Radio-Electronics
Electronics publishers since 1908

Vol. 55 No. 11

SPECIAL FEATURE

57 **TURNKEY SYSTEMS**
If putting together a satellite-TV system component-by-component scares you, you'll be happy to hear about turnkey systems. Marc Stern

BUILD THIS

60 **TELE-TOLL TIMER**
Keep tabs on your phone bills! This device automatically times all of your phone calls. Gary McClellan

65 **COMPUTER-CONTROLLED IC TESTER**
Part 3. In the concluding part of this article, we expand the IC tester by adding an EPROM programmer. Floyd L. Oats

TECHNOLOGY

45 **OSCILLOSCOPES IN COLOR**
New breakthroughs in color-display technology may make the shadow-mask color CRT obsolete! Carl Laron

84 **SATELLITE TV**
A comparison of the past and present state of satellite-TV. Bob Cooper, Jr.

CIRCUITS AND COMPONENTS

73 **DESIGNING WITH LINEAR IC's**
Part 6. A look at logarithmic and isolation amplifiers. Joseph J. Carr

77 **CMOS CLOCK CIRCUITS**
A multitude of versatile and inexpensive CMOS squarewave-generator circuits. Ray Marston

86 **NEW IDEAS**
A novel continuity tester.

88 **DESIGNER'S NOTEBOOK**
Controlling the speed of small DC motors. Robert Grossblatt

90 **DRAWING BOARD**
Useful applications for the 4089 binary rate multiplier IC. Robert Grossblatt

RADIO

49 **WARC 84**
What is the future of shortwave broadcasting? Find out what went on at the latest World Administrative Radio Conference. Stanley Leinwoll

94 **COMMUNICATIONS CORNER**
Mobile digital communications. Herb Friedman

VIDEO

10 **VIDEO NEWS**
The present and future of the fast-changing video scene. David Lachenbruch

96 **SERVICE CLINIC**
Servicing the easy way. Jack Darr

COMPUTERS

70 **INTERFACING THE ZX81**
Part 4. Add a speech synthesizer to the ZX81. Neil Bungard

Following page 86 **COMPUTER DIGEST**
A new high-tech, high-density disk drive; Computer-designed audio networks, and more!!

EQUIPMENT REPORTS

28 **Wersi Pianostar S2000 Electronic Piano**

38 **Bishop Graphics E-Z Circuit Printed Circuit Design Kits**

DEPARTMENTS

120 Advertising and Sales Offices
120 Advertising Index
8 Editorial
121 Free Information Card
22 Letters
98 Market Center
42 New Products
14 What's News

As a service to readers, Radio-Electronics publishes available plans or information relating to newsworthy products, techniques and scientific and technological developments. Because of possible variances in the quality and condition of materials and workmanship used by readers, Radio-Electronics disclaims any responsibility for the safe and proper functioning of reader-built projects based upon or from plans or information published in this magazine.

www.americanradiohistory.com

Diskette Users...

When you've heard from all the animals in the diskette zoo, but you need fast delivery and high quality diskettes...

Call Communications Electronics

Diskette order desk

800-USA-DISK

In Canada 800-CA1-DISK

Choose your brand
Choose your price

Super Disk diskettes for as low as $0.94 each

Wabash diskettes for as low as $0.99 each

BASF diskettes for as low as $1.44 each

3M diskettes for as low as $1.44 each

Product Description	Super Disk Part #	CE quant. 100 price per disk ($)	Wabash Part #	CE quant. 100 price per disk ($)	BASF Part #	CE quant. 100 price per disk ($)	3M Part #	CE quant. 100 price per disk ($)
8" SSSD IBM Compatible 128B/S, 26 Sector	———	———	F111-P	1.59	———	———	3SSSB-P	1.94
8" SSSD Shugart Compatible, 32 Hard Sector	———	———	F31A-P	1.79	———	———	———	———
8" SSDD IBM Compatible (128 B/S, 26 Sectors)	———	———	F131-P	1.89	———	———	8SSDD-P	2.39
8" DSDD Soft Sector (Unformated)	———	———	F144-P	2.09	———	———	8DSDB-P	2.89
8" DSDD Soft Sector (256 B/S, 26 Sectors)	———	———	F144-P	2.09	———	———	———	———
8" DSDD Soft Sector (512 B/S, 15 Sectors)	———	———	F145-P	2.09	———	———	———	———
8" DSDD Soft Sector (1024 B/S, 8 Sectors)	———	———	F147-P	2.09	———	———	8DSDD-1024-P	2.89
5¼" SSSD Soft Sector w/Hub Ring	5451-P	1.14	M11A-P	1.19	———	———	———	———
5¼" SSSD Same as above but bulk product	5457-P	0.94	M11AB-P	0.99	———	———	———	———
5¼" SSSD 10 Hard Sector w/Hub Ring	———	———	M41A-P	1.19	———	———	———	———
5¼" SSDD Soft Sector w/Hub Ring	5481-P	1.29	M13A-P	1.34	54974-P	1.44	5SSDD-DH-P	1.64
5¼" SSDD Same as above, but bulk product	5487-P	1.09	M13AB-P	1.14	———	———	5SSDD-DL-P	1.44
5¼" SSDD Soft Sector Flippy (use both sides)	———	———	M10A-P	1.99	———	———	———	———
5¼" SSDD 10 Hard Sector w/Hub Ring	———	———	M43A-P	1.34	———	———	———	———
5¼" DSDD Soft Sector w/Hub Ring	5491-P	1.54	M14A-P	1.59	54980-P	1.79	5DSDD-DH-P	2.19
5¼" DSDD Same as above, but bulk product	5497-P	1.34	M14AB-P	1.39	———	———	———	———
5¼" DSDD 10 Hard Sector w/Hub Ring	———	———	M44A-P	1.59	———	———	———	———
5¼" DSDD 16 Hard Sector w/Hub Ring	———	———	M54A-P	1.59	———	———	———	———
5¼" DSDD Soft Sector w/Hub Ring 196 TPI)	8581-P	2.44	M10A-P	2.49	54992-P	2.99	5DSDD-96DH-P	3.09
3½" SSDD Soft Sector micro-floppy	———	———	———	———	54112-P	2.74	3SSMB-P	3.74

For more information about this brand call:

Lifetime warranty
For more info on Super Disk call
800-USA-DISK
In Michigan 313-973-1111

5 year warranty
For more info on Wabash call
800-323-9868
In Illinois 312-593-6383

Lifetime warranty
For more info on BASF call
800-343-4600
In Massachusetts 617-271-4000

Lifetime warranty
For more info on 3M call
800-328-9438
In Minnesota 612-736-9524

CIRCLE 35 ON FREE INFORMATION CARD

www.americanradiohistory.com

CE...your best source for diskettes

For you the diskette buyer, it's a jungle out there. There are so many different brands to choose from, you need to go on a safari to find a good brand at a reasonable cost. Fortunately, CE has already hunted for the best diskettes and offers you an excellent choice at a CE price. To save you even more, CE also offers bulk product where 100 diskettes are packed in the same box without envelopes or labels. Since we save packaging costs, these savings are passed on to you. Diskette envelopes are also available from CE. These super strong and tear resistant Tyvek® envelopes are only $15.00 per 100 pack. Use order # TE-5 for a 100 pack of 5¼" diskette envelopes.

Quantity Discounts Available

Our diskettes are packed 10 disks to a carton and 5 or 10 cartons to a case. The economy bulk pack is packaged 100 disks to a case without envelopes or labels. Please order only in increments of 100 units for quantity 100 pricing. With the exception of bulk pack, we are also willing to accommodate your smaller orders. Quantities less than 100 units are available in increments of 10 units at a 20% surcharge above our 100 unit price. **Quantity discounts** are also available. Order 300 or more disks at the same time and deduct 1%; 500 or more saves you 2%; 1,000 or more saves 3%; 2,000 or more saves 4%; 5,000 or more saves 5%; 10,000 or more saves 8%; 50,000 or more saves 7%, 100,000 or more saves 8%, 500,000 or more saves 9% and 1,000,000 or more disks earns you a 10% discount off our super low quantity 100 price. Almost all our diskettes are immediately available from CE. Our efficient warehouse facilities are equipped to help us get you the quality product you need, when you need it. If you need further assistance to find the flexible diskette that's right for you, call the appropriate manufacturers compatibility hotline telephone number listed at the bottom of this ad. Dealer inquiries invited.

Buy your diskettes from CE with confidence

To get the fastest delivery of your diskettes, phone your order directly to our order desk and charge it to your credit card. Written purchase orders are accepted from approved government agencies and most well rated firms at a 10% surcharge for net 10 billing. For maximum savings, your order should be prepaid. All sales are subject to availability, acceptance and verification. All sales are final. All prices are in U.S. dollars. Prices, terms and specifications are subject to change without notice. Out of stock items will be be placed on backorder or substituted for equivalent product at no extra cost to you unless CE is instructed differently. A $5.00 additional handling fee will be charged for all orders with a merchandise total under $50.00. All shipments are F.O.B. CE warehouse in Ann Arbor, Michigan. COD terms are available, in U.S. UPS areas for $5.00 extra, and are payable with cash or certified check.

For **shipping charges** add $8.00 per 100 diskettes and/or any fraction of 100 8-inch diskettes, or $6.00 per 100 diskettes and/or any fraction of 100 5¼-inch or 3½-inch diskettes for U.P.S. ground shipping and handling in the continental U.S. UPS 2nd day air rates are *three* times continental U.S. rates. For Canada, Puerto Rico, Hawaii, Alaska, or APO/FPO delivery, shipping is *three* times the continental U.S. rate.

Mail orders to: Communications Electronics, Box 1045, Ann Arbor, Michigan 48106 U.S.A. If you have a Visa or Master Card, you may call and place a credit card order. Order toll-free in the U.S. Dial 800-USA-DISK. In Canada, order toll-free by calling 800-CA1-DISK. If you are outside the U.S. or in Michigan dial 313-973-8888. WUI telex anytime 871-0155. Order today.

Copyright © 1984 Communications Electronics Inc. Ad #080284

COMMUNICATIONS ELECTRONICS™

Computer Products Division

Box 1045 □ Ann Arbor, Michigan 48106-1045 U.S.A.
Call toll-free 800-USA-DISK or outside U.S.A. 313-973-8888

MasterCard VISA

Verbatim diskettes $1.59 each

Verbatim Part #	CE Quant. 100 price per disk ($)
25820-P	1.59
25821-P	2.54
25823-P	3.39

Memorex diskettes $1.59 each

Memorex Part #	CE Quant. 100 price per disk ($)
3062-P	1.94
3015-P	1.94
3060-P	2.39
3102-P	2.89
3104-P	2.89
3401-P	1.59
3401-P	2.19
3501-P	2.99
6100-P	3.74

Ultra diskettes $1.59 each

Ultra Part #	CE Quant. 100 price per disk ($)
61726-P	1.94
52761-P	2.89
52709-P	2.89
51401-P	1.59
52402-P	1.99
52401-P	2.19
52561-P	2.99

TDK diskettes $1.59 each

TDK Part #	CE Quant. 100 price per disk ($)
F1-S-P	2.34
F2D-S-P	2.89
F2D-S1024-P	2.89
M1D-S-P	1.59
M2D-S-P	2.19
M2DX-S-P	2.99
MF1D-P	2.99

Fuji diskettes $1.59 each

Fuji Part #	CE Quant. 100 price per disk ($)
FD1S-128N-P	1.94
FD2D-P	2.89
FD2D-1024-P	2.89
MD1D-P	1.59
MD2D-P	2.19
MD2D-96TPI-P	2.99

Dysan diskettes $1.94 each

Dysan Part #	CE Quant. 100 price per disk ($)
100581-P	2.49
000885-P	2.69
000883-P	3.14
000835-P	3.14
001187-P	1.94
002060-P	2.64
002667-P	3.99

Lifetime warranty
For more info on Verbatim call
800-538-8589
In California 408-245-4400

5 year warranty
For more info on Memorex call
800-448-1422
Monday-Friday 9am-4pm ET

Lifetime warranty
For more info on Ultra call
408-728-7777
Monday-Friday 8 am-4 pm PT

Lifetime warranty
For more info on TDK call
800-645-6571
In New York 516-625-0100

Lifetime warranty
For more info on Fuji call
800-223-6535
In New York 212-730-3335

Lifetime warranty
For more info on Dysan call
800-552-2211
In California 408-970-0999

CIRCLE 35 ON FREE INFORMATION CARD

www.americanradiohistory.com

COVER 1

A color display for an oscilloscope was always considered to be impractical: Even if the need for color was there, shadow-mask CRT's couldn't deliver the necessary resolution.

However, Tektronix—by using their new liquid-crystal shutter in combination with a monochrome CRT—has found a practical way to add color displays to oscilloscopes. And it's a safe bet that we'll be seeing Tektronix's technology used in many, many other products in the near future.

NEXT MONTH

ON SALE NOVEMBER 22

LCD TV
A look at the technology that is bringing the dream of a hang-on-the-wall TV closer to reality.

VIDEO CAMERAS
A look at miniature, portable cameras for your VCR.

FET POWER AMPLIFIER
High power with high fidelity.

ATARI GAME RECORDER
Store your library of games for the 2600 on cassette tape!

AND LOTS MORE!

Radio-Electronics (ISSN 0033-7862) Published Monthly by Gernsback Publications, Inc., 200 Park Avenue South, New York, NY 10003. Second-Class Postage Paid at New York, NY and additional mailing offices. One-year subscription rate U.S.A. and possessions $14.97, Canada $17.97, all other countries $22.47. All subscription orders payable in U.S.A. funds only, via international postal money order or check drawn on a U.S.A. bank. Single copies $1.75.

© 1984 by Gernsback Publications, Inc. All rights reserved. Printed in U.S.A.

POSTMASTER: Please send address changes to RADIO-ELECTRONICS, Subscription Dept., Box 2520, Boulder, CO 80322

A stamped self-addressed envelope must accompany all submitted manuscripts and/or artwork or photographs if their return is desired should they be rejected. We disclaim any responsibility for the loss or damage of manuscripts and/or artwork or photographs while in our possession or otherwise.

Radio-Electronics

Hugo Gernsback (1884-1967) founder
M. Harvey Gernsback, editor-in-chief
Larry Steckler, CET, publisher

EDITORIAL DEPARTMENT
Art Kleiman, editor
Brian C. Fenton, technical editor
Carl Laron, WB2SLR, associate editor
Robert A. Young, assistant editor
Julian S. Martin, editorial associate
Byron G. Wels, editorial associate
Jack Darr, CET, service editor
Robert F. Scott, semiconductor editor
Herb Friedman, communications editor
Earl "Doc" Savage, K4SDS, hobby editor
Robert Grossblatt, circuits editor
Bob Cooper, Jr. satellite TV editor
David Lachenbruch,contributing editor
Lou Frenzel, contributing editor
Bess Isaacson, editorial assistant

PRODUCTION DEPARTMENT
Ruby M. Yee, production manager
Robert A. W. Lowndes, editorial production
Dianne Osias, advertising production
Karen Tucker, production traffic

CIRCULATION DEPARTMENT
Jacqueline P. Weaver, circulation director
Rita Sabalis, assistant circulation director
Jacqueline Allen, circulation assistant

Cover photo by Robert Lewis

Radio-Electronics is indexed in *Applied Science & Technology Index* and *Readers Guide to Periodical Literature*.

Microfilm & Microfiche editions are available. Contact circulation department for details.

Advertising Sales Offices listed on page 120.

www.americanradiohistory.com

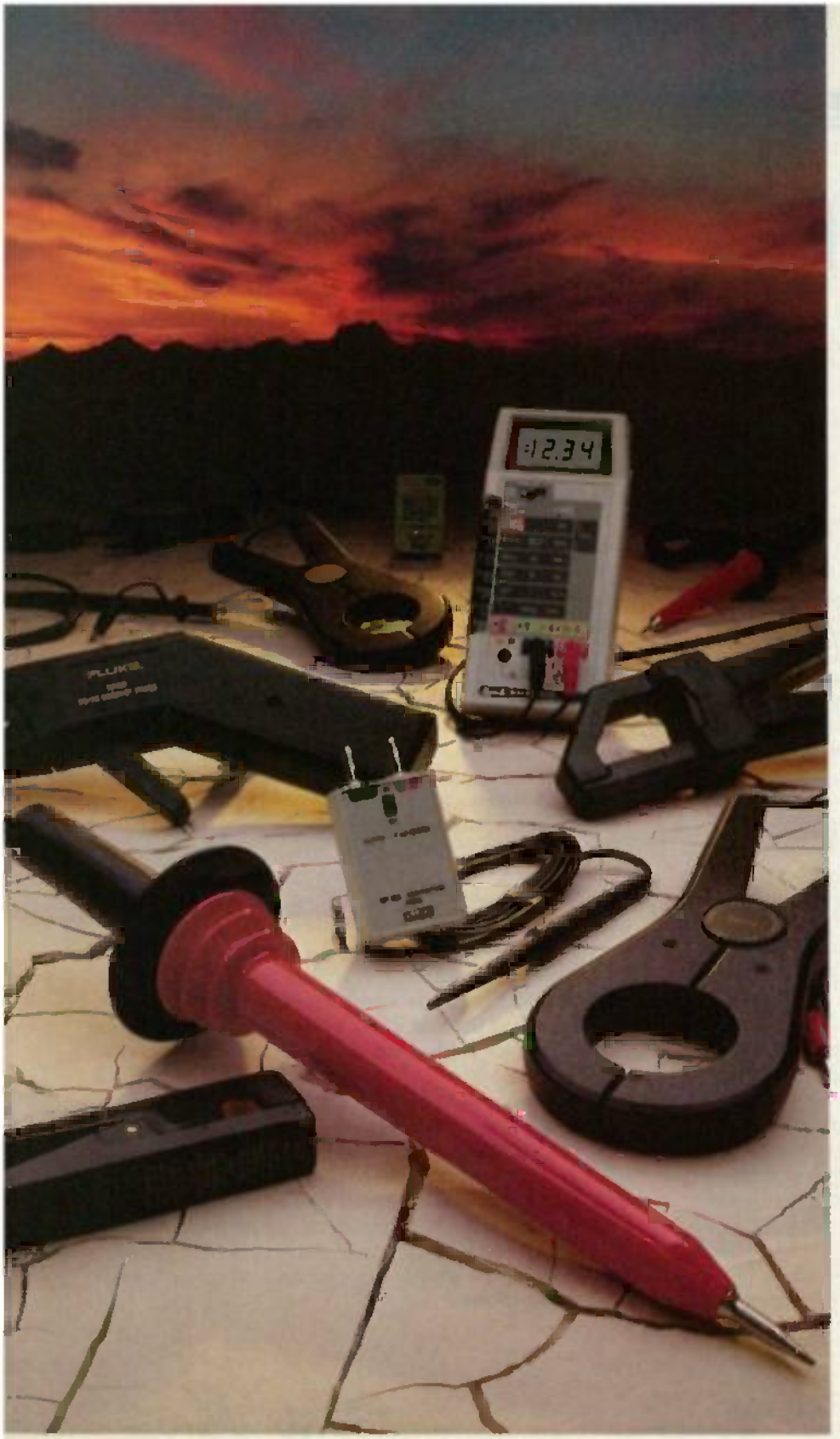

More quality accessories for more DMMs than anyone else in the world.

Fluke has over thirty ways to expand the horizons of your DMM — even if your existing DMM is made by someone else.

Take our new, low-priced 80i-400 current clamp, for example. It's one of five different accessories offered by Fluke to let you take safer, more accurate current measurements in high energy circuits.

Dr consider our universal temperature accessories. They convert your DMM into a thermometer for air, surface, and non-corrosive liquid temperature measurements.

Fluke also offers a variety of probes to measure high voltage and probes for high frequency ac measurements. Plus a complete selection of test leads, battery eliminators, carrying cases, and more.

It's the largest selection of DMM accessories available in the world.

So why spend a lot of money on new equipment, when all you may really need are new accessories.

To get the whole story, ask for a copy of our complete DMM accessories booklet. It's yours for free by contacting your local Fluke Distributor, or by calling toll-free **1-800-426-0361.**

FROM THE WORLD LEADER IN DIGITAL MULTIMETERS.

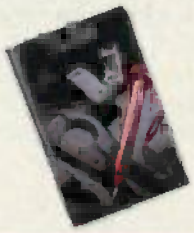

IN THE U.S. AND NON-EUROPEAN COUNTRIES
John Fluke Mfg. Co., Inc.
P.O. Box C9090, M/S 250C
Everett, WA 98206
(206) 356-5400, Tbc 152662

IN EUROPE
Fluke (Holland) B.V.
P.O. Box 5053, 5004 EB
Tilburg, The Netherlands
(013) 673973, Tbc 52237

FLUKE®

Copyright © 1984, John Fluke Mfg. Co., Inc. All rights reserved. Ad No. 4703-8020 For technical data circle number 98

www.americanradiohistory.com

EDITORIAL

Larry Steckler

Simple Problems are Harder to Solve

Wednesday evening is my time for relaxation. And there I was sitting in my most comfortable chair, videodisc player connected to the TV, and ready to enjoy one of my favorite movies. I reached for the remote for the Pioneer videodisc player, pointed it at the end of the room and pushed PLAY, and at the speed of light my new General Electric TV set changed channels.

A minor annoyance? Yes! A growing problem? Yes! Is it easy to solve? No! The only solutions I had available were to either hard-wire the remote to the videodisc player or to replace the TV set.

The problem was a simple one; both remote-control systems used the same frequencies for different functions.

The solution is also potentially simple—ask the consumer-electronics industry to establish a set of standards for remote control. All that is needed is for *all* the manufacturers to agree that on-off for TV sets is channel 1, while on-off for videodisc is channel 2 and so on. Obviously we'll be smart enough to leave room for devices that haven't yet been invented.

Some individual manufacturers have already taken a step in that direction. RCA, for example, packs a remote unit with some of their new TV's that also has the capability of controlling an RCA videotape recorder. Sony has set up a system where specific frequencies have been reserved for the functions of all of their latest remote-controlled consumer-electronics gear. They even provide a master function so that you can turn everything off with a single push of a button. But the catch is that the RCA system and the Sony systems are not compatible. And while each individual manufacturer tries to do its best to be sure that its system does not conflict with others, they don't always succeed.

Thus, it is easy to visualize a situation where you are seated surrounded by a host of individual remote-control units—you could have one for the TV, a second for the VCR, a third for your videodisc player, a fourth for your stereo system, and so on.

That's ridiculous! We're smart enough to put communications satellites in space; we've got to be smart enough to cooperate enough to develop a set of standards for remote control of consumer-electronics devices. I know Macy's isn't noted for telling Gimbel's, but through the auspices of the EIA (that's the Electronics Industries Association), we ought to be able to resolve that simple remote-control problem.

Larry Steckler

LARRY STECKLER, EHF, CET
PUBLISHER

www.americanradiohistory.com

CRIME.

DETECTOR.

REBATE.

Like a smoke detector protects you from fire, a Uniden® Bearcat® Scanner Radio is a simple way to help protect you from neighborhood crime. Because if a crime wave hits, you'll be the first to know about it with up-to-the-minute police reports. And you'll be ready to take precautions against the kind of people who do their shopping at night.

Get up to $50 back on Uniden® Bearcat® Scanners.
To get the rebate on the Uniden® Bearcat® Scanner you've purchased, send (1) original dated sales slip (non-returnable), (2) purchase confirmation cut from carton flap, and (3) this completed request to: Crime Detector Rebate, P.O. Box 50208, Indianapolis, Indiana 46256

Please circle the scanner purchased

(1) BC-300/$50 Rebate
(2) BC-210XL/$25 Rebate
(3) BC-100/$25 Rebate
(4) BC-20/20/$20 Rebate
(5) BC-250/$20 Rebate
(6) BC-220/$20 Rebate
(7) BC-260/$15 Rebate
(8) BC-201/$15 Rebate
(9) BC-200/$10 Rebate
(10) BC-180/$5 Rebate
(11) BC-155/$5 Rebate
(12) BC-151/$5 Rebate
(13) BC-5-6/$5 Rebate
(14) BC-5/$5 Rebate
(15) BC-15/$5 Rebate

First Initial _____ Middle Initial _____ Last Name _____

Address _____

City _____ State _____ Zip _____

Requests must be postmarked by December 8, 1984.
Offer valid only on purchases made between October 1, 1984 and November 25, 1984. All requests must be postmarked by December 8, 1984. Limit of one Uniden® Bearcat® Scanner per household, and/or consumer, regardless of number of Uniden® Bearcat® Scanners purchased. This is a consumer rebate offer only. Resellers, companies and employees of Uniden® their advertising agencies, distributors and resellers are not eligible. This official coupon must accompany all requests and may not be reproduced. This offer may not be used in conjunction with any other rebate offer from Uniden® Bearcat® Offer good only in U.S.A. Void where taxed or prohibited by law. Allow 6-8 weeks for delivery of check.

uniden®
Bearcat®

Uniden® provides major financial support to the Neighborhood Crime Prevention Coordinating Committee.

© 1984 Uniden Corporation of America

CIRCLE 99 ON FREE INFORMATION CARD

www.americanradiohistory.com

VIDEO NEWS

DAVID LACHENBRUCH
CONTRIBUTING EDITOR

• **Home control by video.** Going on the market before year's end is General Electric's *HomeMinder* system that can operate key household devices from the family TV set—adjust temperatures, dim lights, turn appliances on and off at specific times, store messagee, and display important dates and appointments. The system also can be addressed at a distance by means of a pushbutton telephone. *HomeMinder* uses the *X-10* system developed several years ago by BSR. Each appliance or electrical socket is fitted to a module, which may be operated from the central microcomputer by means of a wireless remote control, and all functions are depicted graphically on the TV screen.

HomeMinder initially comes in two versions—a

FIG. 1

$400, set-top system with its own remote control, designed for connecting to any television set, and a 25-inch color monitor-receiver with everything built in and using a single hand-held wireless remote-control unit to operate both the TV set and the *HomeMinder*. The on-screen visuals show diagrams of every room of the house (up to 10 rooms) along with numbered menus of lights and appliances. On-screen prompts (see Fig. 1) help the user to operate the system step by step, such as "What do you want to turn on?" or "Where is it?" Up to 100 lights and appliances may be controlled from the *HomeMinder*, which has 64K ROM and 4K RAM memory.

• **VCR Reliability.** The service record of VCR's already compares with that of color TV, according to manufacturers and marketers of the product. One major manufacturer tracked 665,000 VCR's of 15 of its models sold since 1981 for 18 months and found the "overall defect rate" to be 4.7%. There were service calls on 6.3% of the units over the 18-month period, but 25% of these were found to be unwarranted—due to such causes as battery inserted backwards, deck not plugged in, etc. The same company found that video cameras had only a 2.9% defect rate in 18 months.

Another company listed these top 10 causes of failures during the warranty period: Belts, 21.5%; IC's, 8.8%; tape heads, 4.6%; idlers and pulleys, 4.4%; circuit-board assemblies, 3.9%; motors, 2.5%; switches, 1.5%; tape-loading mechanism, 1.6%; remote-control hand units, 1.3%, and relays, 1%.

Early fears of short head life haven't been borne out by the facts. Manufacturers report their tests show head life of up to 3,000 hours if good-quality tape is used. One major VCR rental firm puts actual life at 1,000 hours and adds: "Head problems always relate to tape quality or tape cleaning." Although some VCR manufacturers recommend one swipe of a head-cleaning cassette when the picture deteriorates, others warn against any consumer head cleaning, and they all agree that here is a major cause of head problems. The worst offenders frequently are audiophiles, who are so accustomed to frequent cleaning of audio-tape recorder heads that they do the same to their VCR's. That can be very damaging because of the speed at which the heads revolve and the delicacy of the heads. The other major cause of head problems—poor-quality tape—results in clogging of heads with flaked off coating. Videotape is one product in which brand name is all-important. **R-E**

www.americanradiohistory.com

Where's Your ELECTRONICS Career Headed?

The Move You Make Today Can Shape Your Future

Yes it's your move. Whether on a chess board or in your career, you should plan each move carefully. In electronics, you can *move ahead* faster and further with a

B. S. DEGREE

Put professional knowledge and a COLLEGE DEGREE in your electronics career. Earn your degree through independent study at home, with Grantham College of Engineering. No commuting to class. Study at your own pace, while continuing your present job.

The accredited Grantham non-traditional degree program is intended for mature, fully employed workers who want to upgrade their careers . . . and who can successfully study electronics and supporting subjects through

INDEPENDENT STUDY, AT HOME

Free Details Available from:

Grantham College of Engineering
2500 South La Cienega Blvd.
P. O. Box 35499
Los Angeles, CA 90035

Independent Home Study Can Prepare You

Study materials, carefully written by the Grantham staff for independent study at home, are supplied by the College, and your technical questions related to those materials and the lesson tests are promptly answered by the Grantham teaching staff.

Recognition and Quality Assurance

Grantham College of Engineering is accredited by the Accrediting Commission of the National Home Study Council.

●

We are located at 2500 S. LaCienega Blvd., Los Angeles, California, but for faster response please use our mailing address: P. O. Box 35499, Los Angeles, CA 90035.

Grantham College of Engineering 11-84
P. O. Box 35499, Los Angeles, CA 90035

Please mail me your free catalog which explains your B.S. Degree independent-study program.

Name_____ Age_____

Address_____

City_____ State_____ Zip_____

www.americanradiohistory.com

PHILIPS KEITHLEY WESTON NLS Non-Linear Systems Simpson B&K PRECISION LEADER

77

- 0.3% Accuracy
- Manual or Autorange
- 10A + mA Range
- Beeper
- "Touch-Hold" Function

FLUKE 70 SERIES MULTIMETERS

- Analog Display • Rotary Knob • Volts AC & DC • Resistance to • 32 MΩ • 10 Amps • Diode Test • 3200 Counts • Fast Autoranging • Function Annunciators in Display • Power-Up Self Test • 2000+ Hour Battery Life w/ Power Down "Sleep Mode" • New Test Leads • VDE & UL Approval

$129.00

WE CARRY A FULL LINE OF FLUKE MULTI-METERS.
IN STOCK NOW

$99.00

75

- 0.5% Accuracy
- Manual or Autorange
- 10A + 300 mA Range
- Beeper

$85.00

73

- 0.7% Accuracy
- Autorange Only
- 10 Amp Only

4½ DIGIT MULTIMETERS

$349.00

MODEL 8060A

FLUKE

- Frequency measuements to 200KHz
- dB measuremants
- Basic dc accuracy 0.4%; 10μV. 10 nA and 10 mΩ sensitivity
- Relative measurements
- True RMS
- High-speed Beeper

B&K PRECISION

70 MHz Dual Time Base SCOPE

MODEL 1570

$995.00

PRICE DOES NOT INCLUDE PROBES

- 1mV/division sensitivity to 70 MHz
- 500 μ V/division cascade sensitivity
- Four-input operation provides trigger view on 4 separate inputs
- Alternate time base operation
- Switching power supply delivers best efficiency and regulation at lowest weight

B&K PRECISION **POWER SUPPLIES**

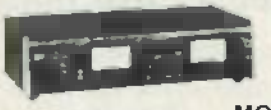

$299.95 **MODEL 1601**

- Isolated 0-50VDC, continuously variable; 0-2A in four ranges
- Fully automatic shutdown, adjustable current limit
- Perfect for solid state servicing

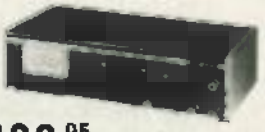

$329.95 **MODEL 1650**

- Functions as three separate supplies
- Exclusive tracking circuit
- Fixed output 5VDC, 5A
- Two 0 to 25VDC outputs at 0.5A
- Fully automatic, current-limited overload protection

B&K PRECISION **INDUSTRIAL TRANSISTOR TESTER**

$199.95

MODEL 520B

- Now with HI/LO Drive
- Works in-circuit when others won't
- Identifies all three transistor leads
- Random lead connection
- Audibly and visually indicates GOOD transistor

FUNCTION GENERATORS

$189.95

- Sine, square and triangle output
- Variable and fixed TTL outputs
- 0.1 Hz to 1MHz in six ranges
- Push button range and function selection
- Typical sine wave distortion under 0.5% from 1 Hz to 100kHz

MODEL 3020 **$319.95**

SWEEP FUNCTION

- Four instruments in one package — sweep generator, function generator, pulse generator, tone-burst generator
- Covers 0.02Hz-2MHz
- 1000:1 tuning range
- Low distortion high-accuracy outputs

CAPACITANCE METERS

$199.95

MODEL 830

- Automatically measures capacitance from 0.1pF to 200mF
- 0.1pF resolution
- 0.2% basic accuracy
- 3½ digit LCD display

$159.95

MODEL 820

- Resolves to 0.1pF
- 4 digit easy-to-read LED display
- Fuse protected against charged capacitors
- Overrange indication

www.americanradiohistory.com

DATA PRECISION | HITACHI | TRIPLETT | FLUKE | AWS | DORIC | HICKOK | VIZ

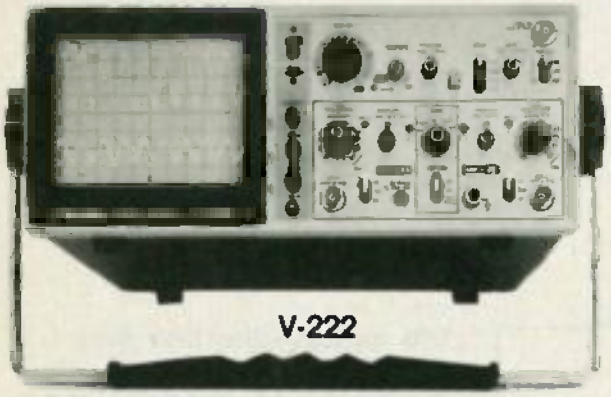

HI-PERFORMANCE PORTABLE OSCILLOSCOPES

ALL FEATURE 6" RECTANGULAR CRT
Full 2 year parts & labor warranty.

HITACHI

$599.95
V-422
DC to 40 MHz, 1mV/div, dual-trace, DC offset function

$499.95
V-222
DC to 20 MHz, 1mV/div, dual-trace, DC off. func., Alt. magnify function

$439.95
V-212
DC to 20 MHz, 1mV/div, dual-trace

$1,249.95
V-1050F
100 MHz Quad Trace w/delay sweep

$939.95
V-650F
60 MHz Dual Trace w/delay sweep

PRICE DOES NOT INCLUDE PROBES. PROBES $50. A PAIR WHEN PURCHASED WITH SCOPE. $15 SHIPPING WITHIN CONTINENTAL U.S.

BECKMAN'S CIRCUITMATE® ALL UNDER $100

AVAILABLE NOW. . . .

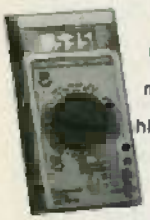

$64.95
Circuitmate DM 20— 3½-digit, pocket-size multimeter; 0.8% Vdc accuracy, diode test, hFE test, conductance, 10 amps AC and DC ranges, auto-polarity auto-zero, auto-decimal

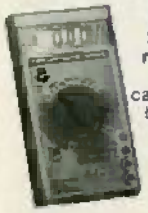

$79.95
Circuitmate DM-25— 3½ digit, pocket-size multimeter; 0.5% Vac accuracy, diode test, capacitance, continuity beeper, conductance, 10 amps AC and DC ranges, auto-polarity, auto-zero, auto-decimal

$69.95
Circuitmate DM-40 — 3½-digit multimeter; 0.8% Vdc accuracy, diode test, auto-polarity, auto-zero, auto-decimal

$89.95
Circuitmate DM 45 — 3½-digit multimeter; 0.5% Vdc accuracy, diode test,continuity beeper, 10 amps AC and DC ranges, auto-zero, auto-polarity, auto-decimal

The DM73 is the smallest digital multimeter on the market. Its probe-style design makes it ideal for taking measurements in hard-to-reach test areas.

$63.95

- Small Size
- Complete Autoranging
- "Touch Hold"
- Audible continuity checking

$76.95
The DM 77 gives you the convenience of autoranging plus 10 amps ac/dc measurement capability. You simply select the function you want, and the DM 77 automatically sets the required range.

TOLL FREE HOT LINE
800-223-0474

26 WEST 46th STREET. NEW YORK. N.Y. 10036
212-730-7030

THE TEST EQUIPMENT SPECIALISTS
ADVANCE ELECTRONICS

www.americanradiohistory.com

WHAT'S NEWS

Revolutionary advance in circuit printing

A major new printed-circuit-production process that will give producers of printed circuits savings ranging into millions of dollars has been developed by scientists of the General Electric Research and Development Center at Schenectady, NY.

Secret of the new process is a family of special metallic "inks" consisting of a liquid polymer "loaded" with fine powdered metals—a mixture of iron and nickel. To define the circuit pattern, the ink is transferred to an insulating substrate (circuit board) by screen printing. The board is then run through an oven to harden and cure the ink.

The board is then dipped into a copper-sulfate bath to plate it with copper. While in the bath, some of the metal powder in the cured ink pattern dissolves (going into solution as ferric sulfate) and copper from the bath takes its place. The process takes about five minutes (versus as much as eight hours for older techniques).

With the new process, circuits can be printed on almost any substrate—glass, paper, plastics and even (properly insulated) steel. A new polymer insulation makes steel a highly practical substrate. The insulation has high dielectric strength, and is flexible, enabling the steel to be bent, if desired.

With the new insulation, cost savings of over 10:1 can be achieved by fabricating multi-layer circuits. The single-layer printed circuit is coated with the dielectric layer—leaving holes where layer-to-layer interconnections are desired—and another circuit is laid out on it. The procedure is repeated to form a number of layers.

G.E. SCIENTISTS ROBERT WOJNAROWSKI (right) AND CHARLES W. EICHELBERGER in the final stage of a new printed-circuit process expected to save millions of dollars a year.

DBS applicants alter their plans

Three DBS applicants—CBS, Western Union, and RCA Americom—have altered their plans, leaving only five applicants prepared to commence DBS programming by the end of this decade.

CBS has abandoned its DBS plans, and has dropped out of a possible joint venture with Satellite TV Corporation. Western Union has also decided not to pursue its proposed Ku-band service. Rather than withdrawing completely, RCA Americom has scaled back its plans. They have postponed any possible start-up until at least 1989, and will use just two 16-channel satellites as opposed to their originally proposed four.

Many of those still proceeding with DBS are altering the details of their proposed services. For example, STC, a subsidiary of Comsat, now is seeking to co-locate two satellites at 110° west longitude instead of their originally proposed 101°. STC also wants to use six channels to cover the entire U.S. upon launch. Originally they planned to start offering service to just the eastern part of the country, with western-U.S. service to commence later.

New infrared detector may be used in space

A new way of making ultrasensitive indium antimonide infrared detectors usable in space satellites should result in an appreciable improvement in the imaging abilities of satellites that are used for weather forecasting and a host of other applications.

Until now, indium antimonide detectors have been limited to land-based equipment or aircraft,

continued on page 21

www.americanradiohistory.com

LITTLE THINGS MEAN A LOT

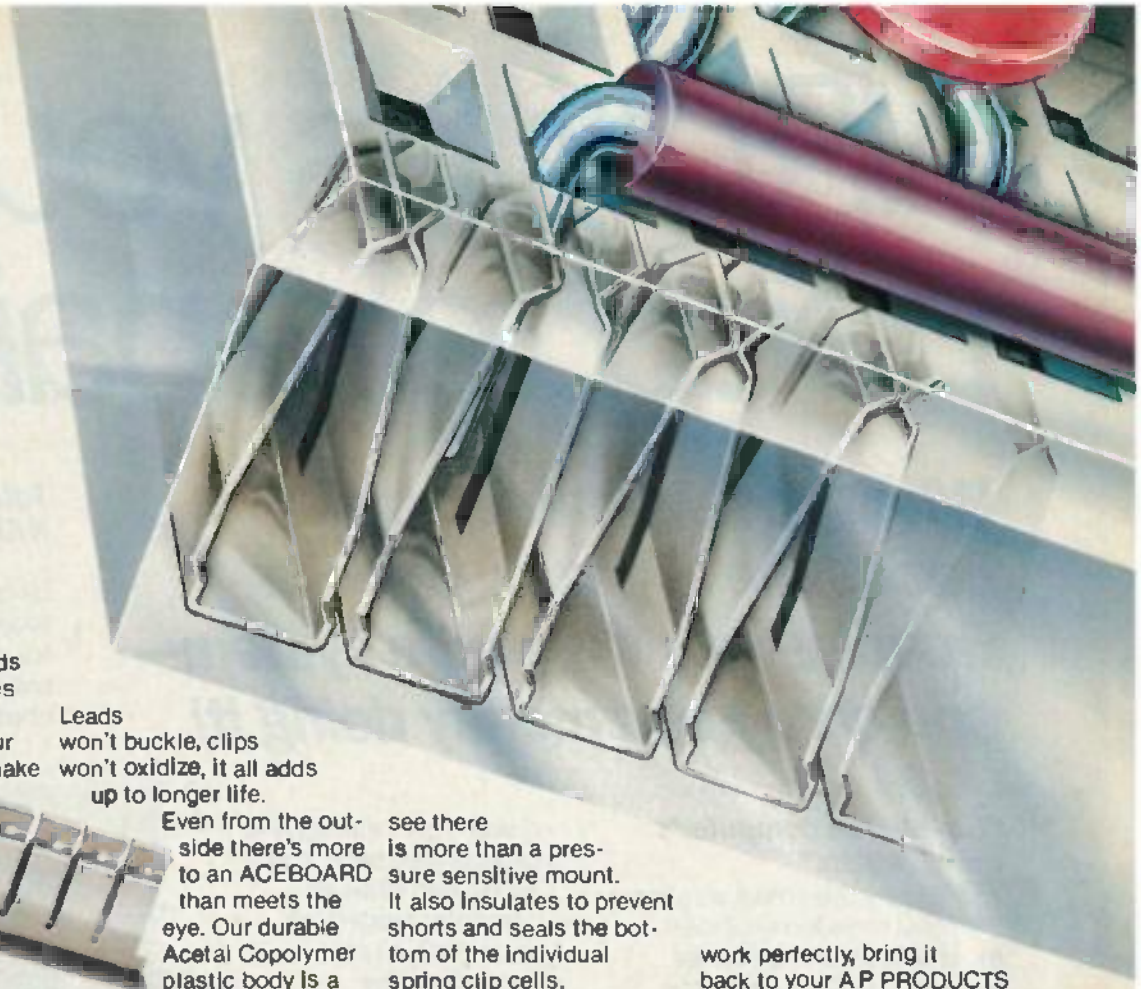

Being the first company to make solderless breadboards isn't necessarily what makes us the best. It's all the little things you don't see, like our spring clip terminals, that make A P® PRODUCTS ACEBOARDS so big on reliability.

From our largest ACEBOARD with over 5000 tie points, to a single tie point block, our spring clip terminals give you nothing but good, solid contact on every connection. They accommodate a wide variety of leads and have the best electrical properties, because our spring clips are solid alloy, not plated nickel. We've even developed enough normal force to break through any oxides which could occur on solder plated leads. You've come to trust our test clips for the same reason.

Since one bad connection can ruin a whole circuit, we pay close attention to how well our spring clip terminals sit within the insulator cell areas. Spring clip edges are never exposed at the insertion window.

Leads won't buckle, clips won't oxidize, it all adds up to longer life.

Even from the outside there's more to an ACEBOARD than meets the eye. Our durable Acetal Copolymer plastic body is a good insulator with excellent dielectric properties. And special manufacturing techniques in the insertion of the contacts into the plastic body insure that your Breadboard will always remain flat. No skimping or planned obsolescence here. Again, just good solid contact on every connection.

Turn our breadboard body over...and you'll discover another key to it's reliability. The double-sided adhesive foam you'll see there is more than a pressure sensitive mount. It also insulates to prevent shorts and seals the bottom of the individual spring clip cells. If solder shavings from resistors or component leads drop into the cell, they can't spread into other cells to short them out.

Take a close look at our ACEBOARDS. A P PRODUCTS has the biggest and most complete line of ACEBOARD sizes. It's also our commitment to you that if your ACEBOARD doesn't work perfectly, bring it back to your A P PRODUCTS distributor. He'll replace it, no hassles.

To help you see for yourself what a big difference the little things make, we're offering you a 10% discount on the entire A P PRODUCTS ACEBOARD/Breadboard line.

Just fill out the coupon and present it to your A P PRODUCTS distributor.

For the name of the distributor nearest you, call TOLL FREE (800) 321-9668. (In Ohio, call collect: (216) 354-2101).

A P PRODUCTS INCORPORATED
9325 Progress Parkway, Box 540
Mentor, Ohio 44060, (216) 354-2101
TWX: 810-425-2250
In Canada, call Lenbrook Electronics • (416) 477-7722

CIRCLE 87 ON FREE INFORMATION CARD

This coupon is worth 10% off the purchase price of any size ACEBOARD or Breadboard product. Offer expires 12/31/84.

Your Name _____

Address _____

City _____ State _____ Zip _____

Dealer Name _____

ACEBOARD # _____

Limit 5 ACEBOARDS or Breadboards per coupon. Offer valid only at participating A P PRODUCTS distributors.

100015-1259

www.americanradiohistory.com

NRI gives you ALL need to repair ALL

When you've learned the basics the NRI way, you can troubleshoot the entire system—and earn good money doing it!

"Uh-oh. The computer's down. Again."

Surely the above words are the most dreaded sounds in most offices. For business owners, lost computer time means lost money. For customers, it usually means frustration, delay and a strong temptation to take a walk to the nearest competitor.

But for the NRI-trained computer service technician, a down computer can mean higher earnings or even the opportunity to start your own computer-maintenance business.

Fixing computers: fastest growing occupation in the U.S.

Whether the flaw is in a circuit board, a disk drive (often) or a printer (very often), *everybody* wants it fixed—and fixed fast.

It's little wonder that America's continuing love affair with the microcomputer has led to growing job opportunities. The U.S. Department of Labor recently projected that the number of computer service jobs will *double* before the year 1995. The same agency also reports median earnings of full-time computer service technicians are $430 per week (with much higher earnings for experienced service persons). And while all computer-related job opportunities are expanding, the computer service technician is the fastest growing job category of all (48% faster than electrical engineers, 92% faster than injection mold machine operators).

Choose from a wide variety of career paths

As a trained computer technician, you have an unusually wide variety of choice of career paths: working for a large corporation or an independent; making office calls or staying in the shop; working for a retailer or for a specialized service firm—even starting your own prosperous computer repair business. The demand is everywhere— and the demand is growing.

Total System Training from NRI: Boards to Peripherals

As an NRI graduate, you'll be qualified to fix just about everything that can go wrong, for any major brand of desktop microcomputer (and a large chunk of the aging minicomputer population, as well).

IBM is a Registered Trademark of International Business Machine Corporation.
Epson is a Registered Trademark of Epson America, Inc.
Apple and the Apple logo are Registered Trademarks of Apple Computer, Inc.
Compaq is a Registered Trademark of COMPAQ Computer Corporation.
©1984 AT&T Technologies, Inc.

www.americanradiohistory.com

the training you'll microcomputers.

Only a person who knows and fully understands all the underlying fundamentals of microcomputers can hope to be able to tackle all microcomputers. NRI has known the need for thoroughly understanding fundamentals since 1914, when we trained the first of our over one million technicians.

NRI's training is hands-on training. We know, and you know, that theory without practical exercises is soon forgotten. So we give you both. You get practical experience in writing programs in BASIC, testing and debugging systems. You'll learn how to install an expansion board, how to troubleshoot pesky circuit flaws. Using NRI's exclusive Discovery Lab®, you'll perform over 60 experiments. You'll learn how to fix the slipped disk drive and how to fix the #@!!!@ printer.

Learn at home, in your spare time

You learn at your convenience, at your own most comfortable pace. Without classroom pressures, without rigid night-school schedules, without wasted gasoline. Your personal NRI instructor and the NRI staff are with you all the way. They'll answer your questions, give you guidance—even give special help if you need it.

Computer, disk drive and printer —all yours to keep

As part of your training, you work with a TRS-80 Model 4, a powerful microcomputer with many of the features and capabilities of machines costing three times as much. You'll install a double-density disk drive and a Gemini 10X printer. And the entire system—computer, drive, printer and manuals—is yours to keep, as part of your training.

Your NRI catalog is free; send the card today

Send the postage-paid card *now* for your free 100-page catalog from NRI. It's the first step you'll take toward joining the growing, exciting world of microcomputers. Your NRI training can lead to wider opportunities and a better income.

And NRI, the oldest and largest home study school, is ready to help you get where you want to go. (Note: if the card has been removed, please write to us today and ask for our free 100-page catalog.)

Your NRI course includes this modern 64K RAM microcomputer, dual-density disk drive, dot matrix printer. . . plus a professional LCD multimeter, NRI Discovery Lab and hundreds of demonstrations and experiments. It's all yours to keep.

NRI SCHOOLS
McGraw-Hill Continuing Education Center
3939 Wisconsin Avenue
Washington, D.C. 20016

We'll give you tomorrow.

TRS-80 is a trademark of the Radio Shack division of Tandy Corp.

www.americanradiohistory.com

The World Famous Simpson 260®

over 3,000,000 Sold and Still the World's Most Preferred, Multimeter. . . Analog or Digital

Does Things That Even the Best Digitals Are Unable to Do, Including Ours

(And We Have 16 of the Best!)

- **"Instant" continuous** null, peak, trend and continuity indications
- **High immunity** to transients and RF interference
- **Does not generate EMI** (electromagnetic interference)
- **dB ranges at no extra cost**
- **Highest common mode and normal mode rejection**
- **Resistance indication** from zero to infinity
- **Self-powered** on all voltage, current and dB ranges—no batteries or AC line connections
- **Reliable, accurate performance,** even under extreme environments
- **Easy, low-cost maintenance** — no expensive "chips" to fail

- **UL Listed** per UL 1244 "Standard for Safety—Electrical and Electronic Measuring and Testing Instruments"
- **Plus a complete line** of UL Recognized test accessories — test leads, amp-clamps, H.V. probes
- **Options** include mirrored scale, overload relay protections, ever ready case, roll top carrying case, et al.

The Simpson 260 Family Includes 12 UL Listed VOMs

MANUFACTURED IN U.S.A.

Simpson

1984 - OUR 50th ANNIVERSARY YEAR

SIMPSON ELECTRIC COMPANY
A Katy Industries, Inc. Subsidiary
853 Dundee Avenue, Elgin, Illinois 60120-3090
(312) 697-2260 • Telex 72-2418 • Cable SIMELCO
IN CANADA: Bach-Simpson, Ltd., London, Ontario
IN ENGLAND: Bach-Simpson (U.K.) Ltd., Wadebridge, Cornwall
IN INDIA: Ruttonsha-Simpson Private, Ltd., Vikhroli, Bombay

And for Those People Who Want a Digital as Well as an Analog VOM. . . Simpson Has the Largest Line of Hand-Held, Hand Portable and Bench-Portable DMMs

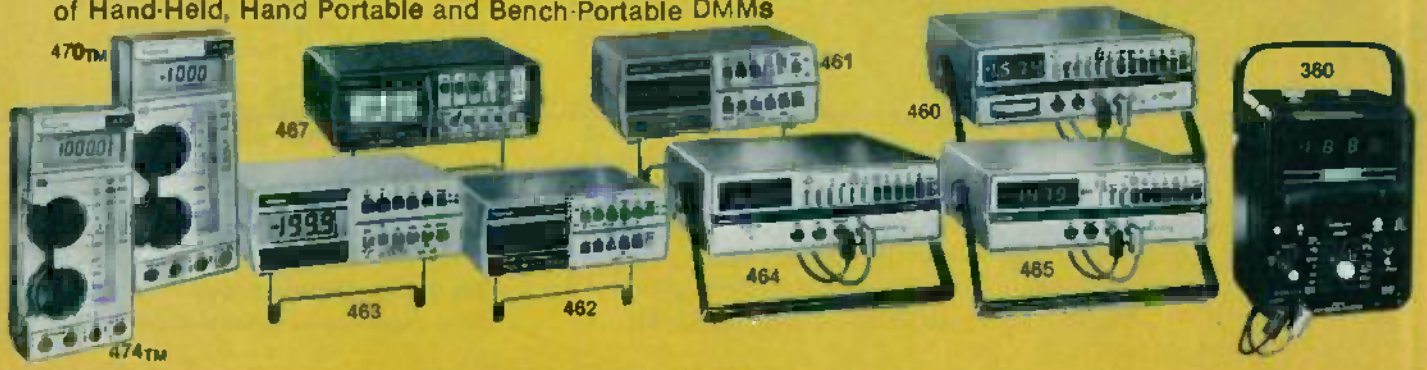

CIRCLE 25 ON FREE INFORMATION CARD

www.americanradiohistory.com

WHAT'S NEWS

continued from page 14

because of their extreme cooling requirements. Such detectors must be operated at temperatures below −300 degrees F, making cooling with liquid nitrogen or helium necessary. Those coolants evaporate and must be replenished, ruling them out for unattended space satellites.

The material prepared by General Electric scientist Dr. Wirojana Tantraporn will permit detectors to perform effectively at −240 degrees F. That temperature can be maintained indefinitely by satellite refrigeration systems powered by solar cells.

Dr. Tantraporn determined that certain types of impurities in the material were important in determining its operating temperature, and was able to develop a process that controls the type and amount of impurities. In his process, a conventional indium antimonide wafer is coated with a thin, high-purity overlayer consisting of indium, antimony, and a special impurity, or dopant.

In-office "voice mail" developed by Fujitsu

An intra-office "voice mail" computer system that can log a voice message into a storage unit and forward it to the recipient later is announced by Fujitsu. Message-recording systems are familiar, but previous ones have been able only to record the messages on an auxiliary tape recorder.

With the new voice-mail system (VMS), if the caller finds the extension he has called busy or unattended, he flashes the VMS and repeats his message. The VMS stores the message, then periodically rings the called party until the receiver is picked up.

The VMS provides up to 2,000 extensions with services, and can process up to 24 messages at once, with a storage capacity of 1,400 60-second messages. That capacity is attained by converting the analog phone signals to digital signals, then storing them by "adaptive differential pulse modulation." In that system, a signal is recorded only when it differs from the one preceding it. That results in a great saving of space.

The VMS can be used to connect a number of offices in different locations by connecting the offices with leased telephone circuits.

Parallel recording permits high speeds

A new technique records information onto an optical disc simultaneously from three semiconductor lasers that are on a single IC. The new system, multichannel recording, can store and retrieve vast amounts of information at speeds hitherto impossible. It was developed by scientists of RCA laboratories at Princeton, NJ.

Three high-power semiconductor lasers, mounted on a single IC, are the central feature of the development. They record information by creating tiny pits in a light-absorbing layer on the disc. Each pit is less than thirty millionths of an inch across. The information from the three lasers is simultaneously recorded in three closely spaced parallel grooves. The disc that is used is 14 inches across and can store 100 billion bits. A low-power laser retrieves the information.

"Modern high-speed communications, such as microwave signals from satellites or light pulses in optical fibers, can easily overwhelm single-channel storage systems," says an RCA spokesman. "With multi-track recording, information can now be stored at extremely high data rates. In the future, large computer mainframes that require mass storage of data would also benefit from multi-channel optical recording."

Telex to take over Raytheon Data Systems

Raytheon Co. and Telex Corp. announce an agreement in which Telex Computer Products, Inc. will acquire the assets of the Raytheon Data Systems Division. The purchase price is eslimated at more than $200 million.

The companies indicated that about 2,100 employees of Raytheon Data Services and Leasing Co. will be able to transfer to Telex, to service Raytheon customers. Telex has expressed its intention to establish operations in Massachusetts, largely to service the large base of airline users it will obtain as part of the agreement.

Future direct-broadcast satellites to be most powerful

The United States Satellite Broadcasting Co. (USSB) of Minneapolis, has let a contract for two high-powered direct-to-home broadcast satellites (DBS). Both design and construction has been contracted to RCA Astro-Electronics, East Windsor, NJ. Operating at 240 watts-per-channel, they will provide TV pictures and stereo sound of the highest quality to all 50 states, Puerto Rico and the Virgin Islands.

Because of the high power of the satellites—greater than anything yet built or contracted for—home owners will be able to receive their signals on inexpensive 24-inch dishes on their rooftops. The first launch is scheduled for 1988. **R-E**

www.americanradiohistory.com

LETTERS

WRITE TO:

LETTERS
Radio-Electronics
200 Park Ave South
New York, NY 10003

SINCLAIR LIVES

I have been enjoying your magazine for some time now, and I have found your articles informative and accurate. I did spot a comment in the July 1984 issue which bothered me a bit, though. In the article "Interfacing the *ZX81*," by Neil Bungard, one sentence reads in part, "And now that the computer is no longer being produced, you can...."

Not so! While we all know that Timex has stopped producing the *TS1000*, Sinclair is not dead, and in fact has recently signed a deal with an eastern firm (whose name, unfortunately, escapes me at the moment) to produce more *ZX81*'s.

Lest anyone believe that I am in any way detracting from Mr. Bungard's article, let me say that I have every intention of building his circuit or a variant of it, as I have with the last few circuits for the *TS1000/ZX81* that you have printed.

While your publication is not completely dedicated to computers, radio, or any other specialty (a fact I enjoy very much), it may interest you to know that I consider your articles among the very best I have seen.

TIM RUSSELL
Thousand Oaks, CA

VIDEODISC INFERIOR

Your "Video Electronics" column in the July, 1984 issue of Radio-

Be Sure... with RCA's Antistatic Kit.

Protect static sensitive devices from costly damage.

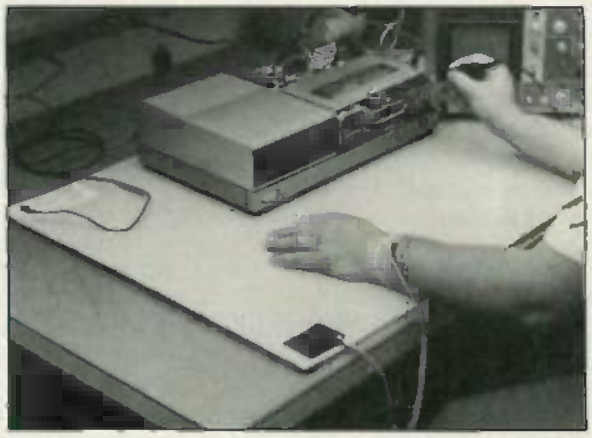

Electrostatic charges build up all around the work environment, posing a constant threat to static sensitive devices.

RCA's Antistatic Kit (Stock No. 162351) protects these devices from the damaging effects of static buildup. The kit consists of a static dissipative mat, a lightweight wrist strap and coil cord, and a six-foot grounding cable that safely drains electrostatic charges to ground.

No matter what kind of static sensitive devices you test, repair, or work with, you need RCA's Antistatic Kit working for you. See your RCA Parts Distributor; or for more information write RCA Distributor and Special Products Division, 2000 Clements Bridge Road, Deptford, NJ 08096-2088. Attention: Sales Promotion Services.

RCA Distributor and Special Products Division

www.americanradiohistory.com

THE MOST WANTED OSCILLOSCOPE...

HITACHI

35 MHz Dual Trace

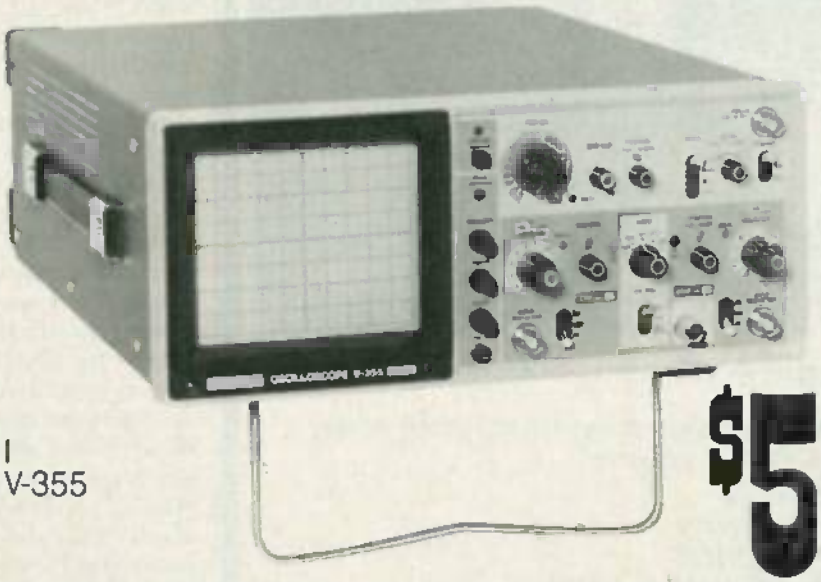

HITACHI
Cat. No. V-355

$599.95 With Probes

AVAILABLE ONLY FROM FORDHAM

Description Its thin, light, compact design features a large 6 inch rectangular, internal graticule CRT with percent calibrations, autofocus, scale illumination and photographic bezel.

Reward Eliminates distortion and parallax. High performance. Most cost effective scope around.

■ MASTERCARD ■ VISA ■ C.O.D. ■ MONEY ORDER ■ CHECK

C.O.D.'s extra (required 25% deposit) • Add $8.50 for shipping and insurance • N.Y. State residents add appropriate sales tax

Fordham
260 Motor Parkway, Hauppauge, New York 11788

TOLL FREE
(800) 645-9518
In New York State Call 800-832-1446

www.americanradiohistory.com

Electronics, contained a reference to RCA's "noble experiement" with CED videodisc, and elsewhere I read that a high RCA official had said, in effect, that the CED debacle was a "technical success but a marketing failure."

Those comments annoy me because the obvious reason that the system failed—as anyone who owned a VCR and a CED system could testify—is that the CED system was significantly inferior in performance to VCR systems. I own about ten CED videodiscs, and have viewed at least twice as many rental tapes. *All* the rental tapes were of obvious higher quality that the *best* of the videodiscs. That reflects comparison between *used* tapes and absolutely *new* discs; the disc deteriorates rapidly with replaying.

All the videodiscs I own arrived with skips (those are just like the similar defect in an audio record; the picture shifts abruptly as a small section of the program is skipped over). Every single one had at least one of those defects; I haven't counted, but my impression is that they invariably had many (five or ten) skips on arrival. Such defects increased with replaying.

I don't mean to beat a dead horse. What I find annoying and disturbing is the apparent inability of American companies and technical observers to dislinguish excellence from mediocrity.

GREGOR OWEN
Port Jefferson, NY

PREFERRED CHOICE CLARIFIED

I don't quite understand why Mr. Rich Taylor disagrees with me. (**Radio-Electronics**, "Letters," May 1984.) In the February 1984 issue, I stated that "...I didn't think computer-circuitry articles have been emphasized too heavily." That is evident by the number of people retaining **Radio-Electronics** subscriptions and dropping others like *Computers & Electronics*. I didn't say or imply **Radio-Electronics** should become another computer magazine.

My point was that **Radio-Electronics** shouldn't go out of its way *not* to publish articles that deal with computers. After all, computers most definitely do have a place in what he called, "The last good general-interest electronics magazine..." (I couldn't agree more about that description of your magazine.) It seems to me that Mr. Taylor misunderstood my meaning. I hope that this clarifies it.

EDWARD W. LOXTERKAMP
Cincinnati, OH

NO COMPUTERS—PLEASE

I am writing to emphatically agree with Richard Taylor's letter in the May 1984 issue of **Radio-Electronics**; it is indeed the last good general-interest electronics magazine around. Since *Popular Electronics* changed its emphasis and name, its interest and value to me, and, I'll bet, to many others who formerly subscribed, plunged to zero.

You tell us that your insert, Computer Digest, takes "no editorial

The Circuitmate Family

Designed for maximum convenience and ease of use.

Special features found only on certain models include:
- full line of accessories
- tilt bale
- autoranging
- "touch hold"
- easy access battery hatch
- anti skid pads

Prices range from $59.95 to $89.95

All models except for the DM73, are made with a rotary dial which makes selection simple with a bright clear display.

Beckman Industrial™

The Professional Test Equipment Source
The Instrument Mart
295 Community Drive, Great Neck, New York 11021
(516) 487-7430 Outside N.Y. (800) 645-6535

Sales, Service, Rental/Leasing Programs ... and Pre-Owned Test Equipme. ; also Available

FLUKE · LEADER Instruments Corp · Tektronix · KEITHLEY · HITACHI · BECKMAN · Polaroid · HAMEG · POWER DESIGNS · YEW · NLS · WESTON · SOLTEC CORPORATION

CIRCLE 28 ON FREE INFORMATION CARD

www.americanradiohistory.com

Take your family beyond computers

Enter the fascinating world of the home robot

HERO JR is a friendly, dynamic home companion robot. He'll wake you in the morning, guard your home at night, and entertain throughout the day with small talk, songs, and games.

Buy HERO JR assembled, ready to roll out of the box. Or, build him from a simple "We Won't Let You Fail" kit. Either way, you don't need to know anything about robots. His built-in personality is fully pre-programmed. A flip of the switch turns him into your personal robot. Let him move on his own or direct him with a wireless remote control.

Slip in a new cartridge for more pre-programmed phrases, games and actions. And, with his RS-232 interface, optional HERO JR BASIC and a personal computer, you can write your own programs.

There's a lot to learn...and even more to enjoy! So, for less than the cost of a home computer, introduce your family to the wonders of robotic living.

See HERO JR at Heathkit Electronics Centers in major cities across the U.S. and Canada. Consult your telephone white pages for the store nearest you.*

OR SEND TODAY FOR MORE INFORMATION!

Mail this coupon today. Get your...

FREE Heath Catalog.

Full color, full information on HERO JR plus over 500 other fascinating electronic kits.

Mail to: HEATH COMPANY
Dept. 020-238
Benton Harbor, MI 49022

Name _____

Address _____

City _____

State _____ Zip _____ RO-118

CIRCLE 38 ON FREE INFORMATION CARD

Heath®/Zenith®

Heath Company

*Units of Veritechnology Electronics Corporation

www.americanradiohistory.com

space away'. Well I stopped believing in a free lunch many years ago; maybe it doesn't represent a subtraction, but then it must represent time, energy, and money that could be added to what you are presently offering.

Please continue with the good thing you've got, and maybe add to it with some of the features and authors that that other magazine used to have. You'll be unique, instead of another one of some twenty-odd computer magazines.

SIDNEY F. KAHN, MD
Norwalk, CA

A READER COMMENTS

I received the June issue of **Radio-Electronics** just two days ago, and I have completed the first reading. I am moved to forward my comments immediately.

Your special section "Receiving Satellite Television" was timely, competent, informative, and extremely well done. I am now retired from the electronics field after many active years, so I am not closely in touch. This provides an excellent forum for summarizing the current state of things. Thanks for a job well done.

Although I am not yet active in computer programming, I have hopes for the near future; we have acquired an IBM *PC* and printer in our home. I feel confident that your **ComputerDigest** section will become a valuable and useful resource for me.

I wish I could be as complimentary about Robert Grossblatt and his "Drawing Board" article on page 88. It is a masterful combination of self-adulation, obfuscation, and derision of mathematics, which patronizes his readers, states incorrect information, and fails utterly in explaining how the circuit worked. I knew how it worked until I read the article.

It was gratifying to learn that 36° is ⅒ of 360° and that the Q outputs of the CD4018 wired decade counter repeats after five counts. Methinks he would find the timing diagram in the specification sheet fascinating reading.

Why did he mention Fibonacci numbers? Is he interested in rabbits? He should be aware that these numbers rarely scare anyone. Most people have never heard of them and could not care less. Those who have, know them to be simple and not very useful.

My enthusiasm remains substantially undaunted. Keep up the good work.

L.D. SMITHEY
Pacific Palisades, CA

ADDRESS NEEDED

Recently I have been asked to repair a model *200* audio amplifier manufactured by Integral Systems. I have tried to obtain a set of schematics for the unit but have been unable to contact the company. The address that I have for the company is 463 Salem Street, North Wilmington, MA 01887. If you or any of your readers could help me to locate the company, I would be grateful for your help. Thank you.

KENNETH MONGELLUZZO
Box 608
Newfield, NJ 08344

R-E

The Professionals' Choice

PTS

"I get all the modules I need in one stop . . .

PTS makes my job easier with 'one stop shopping'. All the modules and tuners I need are available right behind the counter. I can get fast, 8 hour rebuilding, or I can make a quick exchange at over 1500 distributors throughout the country."

Try PTS rebuilt modules and tuners for:

- Fast 8 hour rebuilding service
- Full year limited warranty
- Availability at over 1500 authorized stocking distributors
- Quality rebuilts that meet or exceed original manufacturers' specs
- One stop shopping for all makes/all models

PTS™

For your free copy of the PTS Price and Technical Information Guide write:

PTS CORPORATION
P.O. Box 272
Bloomington, IN 47402
(812) 824-9331

CIRCLE 52 ON FREE INFORMATION CARD

www.americanradiohistory.com

Oops proof.

Now there's a new breed of Beckman Industrial Corporation hand-held DMMs tough enough to withstand accidental drops, input overloads and destructive environments.

The new HD100 and HD110 DMMs are drop-proof, packed with overload protection and sealed against contamination. You won't find a more rugged meter than our HDs.

Drop Proof

Constructed of double-thick thermoplastics, the HD100 series DMMs resist damage even after repeated falls. All components are heavy-duty and shock mounted.

Contamination Proof

The HD series meters are designed to keep working even around dirt, heavy grime, water and oil. The special o-ring seals, ultrasonically-welded display window and sealed input jacks protect the internal electronics of the HD meters. The oops-proof meters are sealed so tightly, they even float in water.

Accidental Overload Protection

All DC voltage inputs are protected up to 1500 Vdc or 1000 Vrms. Current ranges are protected to 2A/600V with resistance ranges protected to 600 Vdc. Transient protection extends up to 6KV for 10 microseconds.

More Meter for Your Money

For starters you can get 2000 hours of continuous use from a common 9V transistor battery. You can run in-circuit diode tests and check continuity. You even get a one year warranty.

The 0.25% basic dc volt accuracy HD meters serve you with 7 functions and 27 ranges. The HD 110 also gives you 10 AMPS ac and dc. With one simple turn of the single selector switch, you can go directly to the function and range you need. There's less chance of error.

Also available is the electrical service kit. It includes the meter of your choice, a current clamp, deluxe test leads and a heavy-duty case designed to carry both meter and accessories, conveniently.

Feature for feature you can't find a more dependable meter with prices starting at just $169 (U.S. only).

To locate your nearest distributor, write Instrumentation Products Division, Beckman Industrial Corp. A Subsidiary of Emerson Electric Company. 630 Puente Street, Brea, CA 92621 (714) 773-8111.

Beckman Industrial™

CIRCLE 7 ON FREE INFORMATION CARD

www.americanradiohistory.com

EQUIPMENT REPORTS

Wersi Pianostar S2000 Electronic Piano

A versatile electronic piano that you can build yourself.

CIRCLE 101 ON FREE INFORMATION CARD

IT IS ESTIMATED THAT THERE ARE SOME 30 million pianos in the united states. Most of those are of the mechanical variety that everyone is familiar with. Some, however, are quite different—they are electronic. In those, advanced electronic circuitry replaces the traditional strings, hammers, etc.

In this review we are going to look at one of those electronic pianos, the *Pianostar S2000* from Wersi (1720 Hempstead Road, Lancaster, PA 17601). An interesting twist is that that piano is one that you can build yourself.

continued on page 30

IC Test Clips

Unlike "clothespin" type test clips which can stress IC's and even accidentally loosen or extract them, the CHIP-CLIP attaches by means of a snap-action locking ring that ensures reliable contact but with virtually no stress to the device under test.

PRB-1 Logic Probe

Compatible with DTL, TTL, CMOS, MOS and Micro-processors using a 4 to 15V power supply. Thresholds automatically programmed. Automatic resetting memory. No adjustment required. Visual indication of logic levels, using LED's to show high, low, bad level or open circuit logic and pulses. Highly sophisticated. Eliminates need for heavy test equipment. A definite savings in time and money for Engineer and Technician.

PLS-1 Logic Pulser

PLS-1 is a multi-mode high current pulse generator packaged in a hand-held instrument. Signal injection is by means of a pushbutton switch near the probe tip. Pulse polarity is automatic. Holding the button down delivers a series of pulses of 20 pps to the circuit under test.

3456 Conner Street, Bronx, New York, 10475, U.S.A.
Telex 125091 OK NYK, Telex 232395 OK NY UR
Phone (212) 994-6600.

OK Industries Inc.

CIRCLE 30 ON FREE INFORMATION CARD

www.americanradiohistory.com

DATA PRECISION HITACHI TRIPLETT FLUKE AWS DORIC HICKOK VIZ

...Quality *and* Performance

Beckman *and* 4½ Digits... True RMS

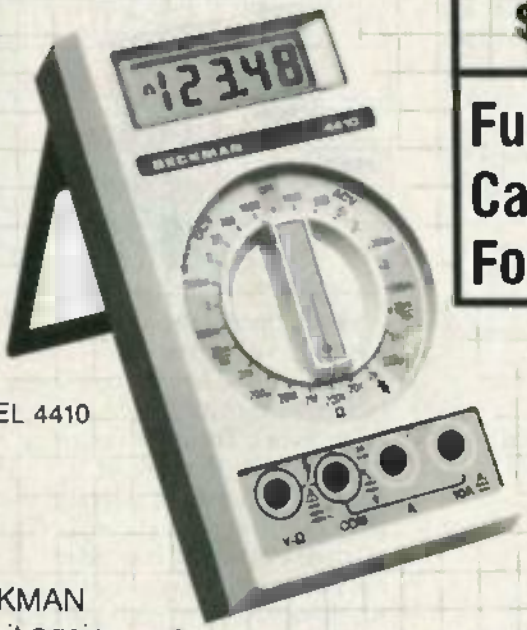

MODEL 4410

BECKMAN does it again . . . a true RMS 4½ DMM w/1 year calibrated cycle at a 3½ digit price.

$239.00

AVAILABLE NOW!

DC V	200mV, 2V, 20V, 200V, 1500V .06%
AC V	200mV, 2V, 20V, 200V, 1000V ±0.5%
DC A	200µA, 2mA, 20mA, 200mA, 2A, 10A 0.3%
AC A	200µA, 2mA, 20mA, 200mA, 2A, 10A 0.8%
Ω	2K, 20K, 200K, 2M, 20M ±0.1%

FLUKE 4½ DIGIT MULTIMETERS

MODEL 8060A

- Frequency measurements to 200KHz
- dB measurements
- Basic dc accuracy 0.04%; 10 µV, 10nA and 10 mΩ sensitivity.
- Relative measurements
- True RMS
- High-speed Beeper

$349.00

- Continuity and relative reference functions identical to 8060A.
- True RMS measurements to 30 kHz.
- Basic dc accuracy 0.05%; 10 µV, 10 nA and 10 mΩ sensitivity.
- Beeper

MODEL 8062A

$279.00

Full Line-All Brands of Test Gear Call Toll Free For Prices

B&K PRECISION 100MHz Dual Time BASE SCOPE

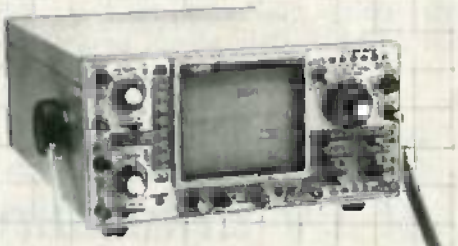

MODEL 1590

While Quantities last

- 1mV/division sensitivity to 100MHz
- 500µ V/division cascade sensitivity
- 2ns/division sweep rate with t0× magnifier
- Four-input operation provides trigger views or four separate inputs
- Selectable 1MΩ or 50Ω inputs
- Alternate timebase operation
- 20MHz bandwidth limiter for best view of low frequency signals
- Lighted function pushbuttons employing electronic switching with non-volatile RAM memory
- Switching power supply delivers best efficiency and regulation at lowest weight
- Selectable frequencies for chop operation

VISA

TOLL FREE HOT LINE

800-223-0474

212-730-7030

26 WEST 46th STREET, NEW YORK, N.Y. 10036

THE TEST EQUIPMENT SPECIALISTS

ADVANCE ELECTRONICS

www.americanradiohistory.com

EQUIPMENT REPORTS

continued from page 28

The *Pianostar*

The *Pianostar S2000* is a versatile electronic musical instrument. It is housed in an attractive wood cabinet and measures 40⅛ × 57⅛ × 22¾ inches. The keyboard has a 7-octave range. The unit boasts two 60-watt RMS audio amplifiers. Sound output is available from three sources: speakers, a headphone jack, and a tape-recorder interface.

Eight different "voices" or sounds are available from the *Pianostar*. Two or more of those voices can be selected simultaneously for special effects (more on that later), etc. The voices "piano" and "harpsichord" sound just like their familiar mechanical counterparts. The "cembalo" voice sounds much like a harpsichord, except that every key sounds at its normal pitch plus the pitch that's one octave higher. Another name for the "honky-tonk" voice might be player piano, because that voice sounds just like a player piano.

The forerunner of the piano used metal plates instead of strings. The resulting sound is, as you would imagine, rather harsh. That sound is simulated by the unit's "kinura" voice.

The unit's "banjo" voice sounds very much like the instrument for which it is named. Other voices include "rock piano" and "stage piano."

The two foot pedals normally function exactly like their mechanical piano counterparts. The left pedal serves as a damper; the right one adds a sustain. In the *Pianostar*, however, new functions can be assigned to the pedals by simply depressing a switch. Depressing the HAWAII switch assigns a new task to the left pedal. In that mode, each time that pedal is depressed, the overall pitch drops by half a tone and then returns slowly to normal. With some practice, you will be able to accurately simulate a "Hawaiian guitar" sound. When the VIBRATTO PEDAL mode is selected, depressing the left pedal will add vibrato that will start with a certain hesitation and then build up gradually.

An almost limitless number of special effects can be achieved through the use of the unit's voltage-controlled filter (VCF). That filter has a passband that can be varied from wide to narrow. The center frequency is adjustable and can fall anywhere over a wide frequency range. That center frequency can also be made to vary about the nominal center frequency. The amount of variation and the speed of that variation can be set by the user.

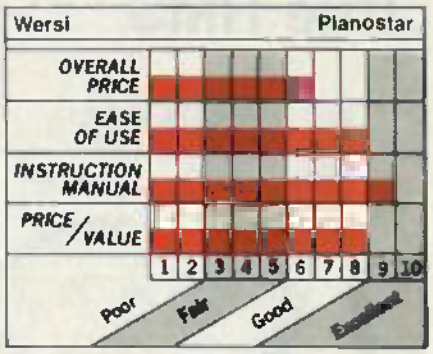

Operation of the VCF is handled by two switches (VCF and VCF TRACKING) and four rotary controls (SPEED, AMPLITUDE, RESONANCE, and FREQUENCY). The VCF is turned on by the switch marked VCF. The center frequency is selected using the FREQUENCY control. The RESONANCE control is used to select the passband. AMPLITUDE is used to set the amount of center-frequency variation. The speed of that variation is set by the SPEED control. Normally, as mentioned above, the center frequency is set by the frequency control. When VCF TRACKING is selected, however, the center frequency is pulled up to the frequency of the highest key being played.

Experimenting with those controls and their settings will allow you to simulate a wide variety of sounds for special effects. For example a "wah wah guitar" can be simulated with the following settings: voices, rock piano and kinura; VCF, on; VCF tracking, on; amplitude, 10; speed, center; frequency, center, and resonance, 10.

Construction

Building the *Pianostar* is certainly not a one-night job. On the

Enter A Whole New World of TV Entertainment

Regency invites you to enter the exciting world of home satellite television. Imagine being able to choose from over 100 channels, including movies, sports, news, and educational programs, all at the touch of a button. Regency offers a complete selection of satellite system components including the new SR5000 remote controlled satellite receiver pictured here. For more information on the whole line of Regency satellite products, see your Regency dealer or write us at the address below.

Regency Electronics Inc. • 7707 Records Street • Indianapolis, IN 46226

CIRCLE 9 ON FREE INFORMATION CARD

www.americanradiohistory.com

NEW!

Regency®

Scanners

Communications Electronics,™ the world's largest distributor of radio scanners, introduces new models with special savings on all radio scanners. Chances are the police, fire and weather emergencies you'll read about in tomorrow's paper are coming through on a scanner today.

We give you excellent service because CE distributes more scanners worldwide than *anyone* else. Our warehouse facilities are equipped to process thousands of scanner orders every week. We also export scanners to over 300 countries and military installations. Almost all items are in stock for **quick shipment**, so if you're a person who prefers fact to fantasy and who needs to know what's *really* happening around you, order your radio today from CE.

NEW! Regency® MX5000-E

List price $599.95/CE price $359.00
Multi-Band, 20 Channel • No-crystal scanner
Search • Lockout • Priority • AC/DC
Selectable AM-FM modes • LCD display
World's first continuous coverage scanner
Frequency range: 25-550 MHz continuous coverage

Never before have so many features come in such a small package. The *Regency* MX5000 mobile or home scanner has continuous coverage from 25 to 550 MHz. That means you can hear CB, Television audio, FM broadcast stations, all aircraft bands including military and the normal scanner bands, all on your choice of 20 programmable channels.

Regency® MX3000-E

List price $319.95/CE price $179.00
6-Band, 30 Channel • No-crystal scanner
Search • Lockout • Priority • AC/DC
Bands: 30-50, 144-174, 440-512 MHz

The *Regency* Touch MX3000 provides the ease of computer controlled, touch-entry programming in a compact-sized scanner for use at home or on the road. Enter your favorite public service frequencies by simply touching the numbered pressure pads. You'll even hear a "beep" tone that lets you know you've made contact.

In addition to scanning the programmed channels, the MX3000 has the ability to search through as much as an entire band for an active frequency. The MX3000 includes channel 1 priority, dual scan speeds, scan or search delay and a brightness switch for day or night operation.

Regency® Z30-E

List price $279.95/CE price $189.00
6-Band, 30 Channel • No-crystal scanner
Bands: 30-50, 144-174, 440-512 MHz

Cover your choice of over 15,000 frequencies on 30 channels at the touch of your finger.

Regency® C403-E

List price $99.95/CE price $59.00
5-Band, 4 Channel • Crystal scanner
Channel indicator LED • AC only • Low cost
Bands: 30-50, 148-174, 450-470 MHz

Regency's basic scanner, the C403 gives you the excitement of police, fire and emergency calls at a budget price. It can tune in to any of five public service bands and brings the signal in loud and clear...on any of four possible channels. It comes with detachable telescope antenna and AC power cord. Order one crystal certificate for each channel you want to receive.

Regency® HX1000-E

List price $329.95/CE price $209.00
6-Band, 30 Channel • No-crystal scanner
Search • Lockout • Priority • Scan delay
Sidelit liquid crystal display • Digital Clock
Frequency range: 30-50, 144-174, 440-512 MHz

The new handheld *Regency* HX1000 scanner is fully keyboard programmable for the ultimate in versatility. You can scan up to 30 channels at the same time. When you activate the priority control, you automatically override all other calls to listen to your favorite frequency. The LCD display is even sidelit for night use. A die-cast aluminum chasis makes this the most rugged and durable hand-held scanner available. There is even a backup lithium battery to maintain memory for two years. Includes wall charger, carrying case, belt clip, flexible antenna and nicad battery. Order your *Regency* HX1000 now.

Regency® R106-E

List price $159.95/CE price $92.00
5-Band, 10 Channel • Crystal scanner • AC/DC
Frequency range: 30-50, 146-174, 450-512 MHz

A versatile scanner, The *Regency* R-106 is built to provide maximum reception at home or on the road. Rugged cabinet protects the advanced design circuitry allowing you years of dependable listening.

NEW! Regency® R1050-E

List price $179.95/CE price $109.00
6-Band, 10 Channel • Crystalless • AC only
Frequency range: 30-50, 144-174, 440-512 MHz

Now you can enjoy computerized scanner versatility at a price that's less than some crystal units. The *Regency* R1050 lets you in on all the action of police, fire, weather, and emergency calls. You'll even hear mobile telephones.

Programming the R1050 is easy. Merely touch the keyboard and enter any of over 15,000 frequencies on your choice of 10 channels.

Regency® HX650-E

List price $129.95/CE price $79.00
5-Band, 6 Channel • Handheld crystal scanner
Bands: 30-50, 146-174, 450-512 MHz

Now you can tune in any emergency around town, from wherever you are, the second it happens. Advanced circuitry gives you the world's smallest scanner. Our low CE price includes battery charger/A.C. adapter.

NEW! Regency® HX-650P-E

List Price $189.95/CE price $104.00

Now, Communications Electronics offers a special packaged price on the *Regency* HX-650 scanner and the following items for only $104.00. You get the *Regency* HX-650 scanner, a set of 4 AAA ni-cad batteries, the MA-506 carrying case, six crystal certificates, AC adapter/charger and flexible rubber antenna for only $104.00 per package plus $10.00 shipping/handling. To order this special package, use CE special order number HX-650P-E.

QUANTITY DISCOUNTS AVAILABLE

Order two scanners at the same time and deduct 1%, for three scanners deduct 2%, four scanners deduct 3%, five scanners deduct 4% and six or more scanners purchased at the same time earns you a 5% discount off our super low single unit price.

NEW! Regency® MX7000-E

List price $699.95/CE price $449.00
10-Band, 20 Channel • Crystalless • AC/DC
Frequency range: 25-550 MHz continuous coverage and 800 MHz to 1.2 GHz continuous coverage

In addition to normal scanner listening, the MX7000 offers CB, VHF, and UHF TV audio, FM Broadcast, all aircraft bands (civil and military), 800 MHz communications, cellular telephone, and when connected to a printer or CRT, satellite weather pictures.

The *Regency* Touch MX7000 provides the ease of computer controlled, touch-entry programming in a compact-sized scanner for use at home or on the road. Enter your favorite frequencies by simply touching the numbered pressure pads. You'll even hear a "beep" tone that lets you know you've made contact.

In addition to scanning the programmed channels, the MX7000 has the ability to search through as much as an entire band for an active frequency. When a call is received, the frequency will appear on the digital display.

Regency® Z10-E

List price $239.95/CE price $138.00
6-Band, 10 Channel • No-crystal scanner
Priority control • Search/Scan • AC/DC
Bands: 30-50, 140-174, 440-512 MHz

Cover your choice of over 15,000 frequencies on 10 channels at the touch of your finger.

OTHER RADIO ACCESSORIES

B-4-E 1.2 V AAA Ni-Cad batteries (set of four)	$9.00
A-135C-E Crystal certificate	$3.00
A60-E Magnet mount mobile antenna	$36.00
A70-E Base station antenna	$35.00

Add $3.00 shipping for all accessories ordered at the same time. Add $3.00 shipping per scanner antenna.

BUY WITH CONFIDENCE

To ***get the fastest delivery from CE*** of any scanner, send or phone your order directly to our Scanner Distribution Center.™ Be sure to calculate your price using the CE prices in this ad. Michigan residents please add 4% sales tax or supply your tax I.D. number. Written purchase orders are accepted from approved government agencies and most well rated firms at a 10% surcharge for net 10 billing. All sales are subject to availability, acceptance and verification. All sales on accessories are final. Prices, terms and specifications are subject to change without notice. All prices are in U.S. dollars. Out of stock items will be placed on backorder automatically unless CE is instructed differently. A $5.00 additional handling fee will be charged for all orders with a merchandise total under $50.00. Shipments are F.O.B. Ann Arbor, Michigan. No COD's. Most products that we sell have a manufacturer's warranty. Free copies of warranties on these products are available prior to purchase by writing to CE. International orders are invited with a $20.00 surcharge for special handling *in addition* to shipping charges. Non-certified checks require bank clearance.

Mail orders to: Communications Electronics,™ Box 1002, Ann Arbor, Michigan 48106 U.S.A. Add $7.00 per scanner for U.P.S. *ground* shipping and handling in the continental U.S.A. For Canada, Puerto Rico, Hawaii, Alaska, or APO/FPO delivery, shipping charges are three times continental U.S. rates. If you have a Visa or Master Card, you may call and place a credit card order. Order toll-free in the U.S. Dial 800-521-4414. In Canada, order toll-free by calling 800-221-3475. WUI Telex CE anytime, dial 671-0155. If you are outside the U.S. or in Michigan dial 313-973-8888. Order today.

Scanner Distribution Center™ and CE logos are trademarks of Communications Electronics Inc.
†*Regency* is a federally registered trademark of Regency Electronics Inc. AD #080384-E
Copyright © 1984 Communications Electronics

Order Toll Free... call 1-800-521-4414

COMMUNICATIONS ELECTRONICS™

Consumer Products Division

818 Phoenix ☐ Box 1002 ☐ Ann Arbor, Michigan 48106 U.S.A.
Call TOLL-FREE 800-521-4414 or outside U.S.A. 313-973-8888

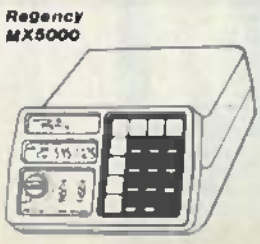

CIRCLE 97 ON FREE INFORMATION CARD

www.americanradiohistory.com

other hand, with the proper care and patience, it could be handled by even a beginner. Part of the reason that that's possible are the excellent manuals provided with the kit. Construction details are covered in two of those manuals. (There are four all together; we'll cover the others shortly.) Of particular help to the first-time builder is the one entitled "General Instructions." That book covers such topics as the tools required, general construction techniques (how to solder, etc.), and how to identify and install the various types of components found in the kit. It would be nice if all kits included such complete and helpful information for the beginner.

Actual construction is covered in the assembly manual. That manual does an adequate job of taking you through the building of the device. It is profusely illustrated, provides valuable hints as you move step-by-step through the construction, and provides you with a checklist to help ensure that nothing is missed. The book does not, however, painstakingly outline the installation of each and every component. It's not uncommon for a single step in the manual to cover the installation of several components; indeed, some single "steps" cover the installation of 294 jumpers, 182 resistors, 168 diodes, and the like. Don't let that scare you away, however; as we said, the manual is still good enough so that most builders should have little trouble successfully completing the project.

The third manual of the four covers the technical aspects of the *Pianostar*. Included are schematics, block diagrams, parts-placement diagrams, and the like. Also included are the theories of operation for the various circuits and sections, and a chapter on servicing hints.

The fourth manual is an owner's manual, whose primary purpose is to briefly summarize the use of the instrument.

Our experiences with the *Pianostar S2000* have been exceedingly positive. No troubleshooting was required as the piano worked perfectly upon the completion of the project. For those that do encounter problems, however, Wersi stands behind their products. The *Pianostar S2000* is covered by a one-year limited warranty.

The *Pianostar S2000* is an outstanding product, and one we recommend for those interested in music and electronics. It sells for $2770. **R-E**

continued on page 38

PRINT™
Products International Inc.
8931 Brookville Rd.
Silver Spring, MD 20910
(301) 587-7824
Equipment, Tool, & Supplies for Maintenance & Service

PACE DESOLDERING EQUIPMENT
MBT-100
Now $349.00
MBT-200
Now $499.00
• Self Contained
• Spike-Safe
• Instant Rise Rotary Carbon Vane Pump
• Pencil Grip Low Voltage Handpiece
• Meets UL Standards
• MBT 200 Desoldering & Soldering

NEW
HUNTRON INSTRUMENTS
The Art of Trouble Shooting
TRACKER AND SWITCHER #2000
Reg. $2,620.00
Special, Both $2,489.00
TRACKER AND SWITCHER #1000
Reg. $1,490.00
Special, Both $1,415.00
• In-Circuit Testing
• Power-Off Testing
• CMOS SAFE
• 20-Pin-40 Pin Dip Cables (Standard in 2000 System)
• Comparative Testing
• Incoming Inspection

SPECIAL
3M STATIC CONTROL
Work Station
Now $191.00
Field Service
Now $41.00
• 2X4 Table Mat (Available Separately)
• 4X6 Floor Mat (Available Separately)
• 2066 Wrist Strap (Available Separately)
• Static Control Electrically Conductive
Gold, Blue, Brown, Beige
• 24X24X10 Mil Velostat Work Surface
• Portable
• Convenient Storage Pocket
• Static Shielding Bags Available

IN STOCK
CIR-KIT
• Edge Connector Repair
• Plated Thru Hole Repair
• Track and Pad Repair
• Conductor Repair
• Lifted Circuit Trace Repair
Basic $57.00
Advanced $87.00
Master $159.00

NEW
C.O.D.
SPECIAL OFFER!
With every desoldering system or repair system ordered, receive free a 70-page how to repair circuit boards textbook. A $19.95 VALUE.
TOLL FREE 800-638-2020

CIRCLE 49 ON FREE INFORMATION CARD

"So we would save 25 cents on the steak. Now, how about the drinks?"

www.americanradiohistory.com

Meet Our New LogicScope 136. . . . A True Dual Trace 10 MHz Digital Storage Scope. Only $495.

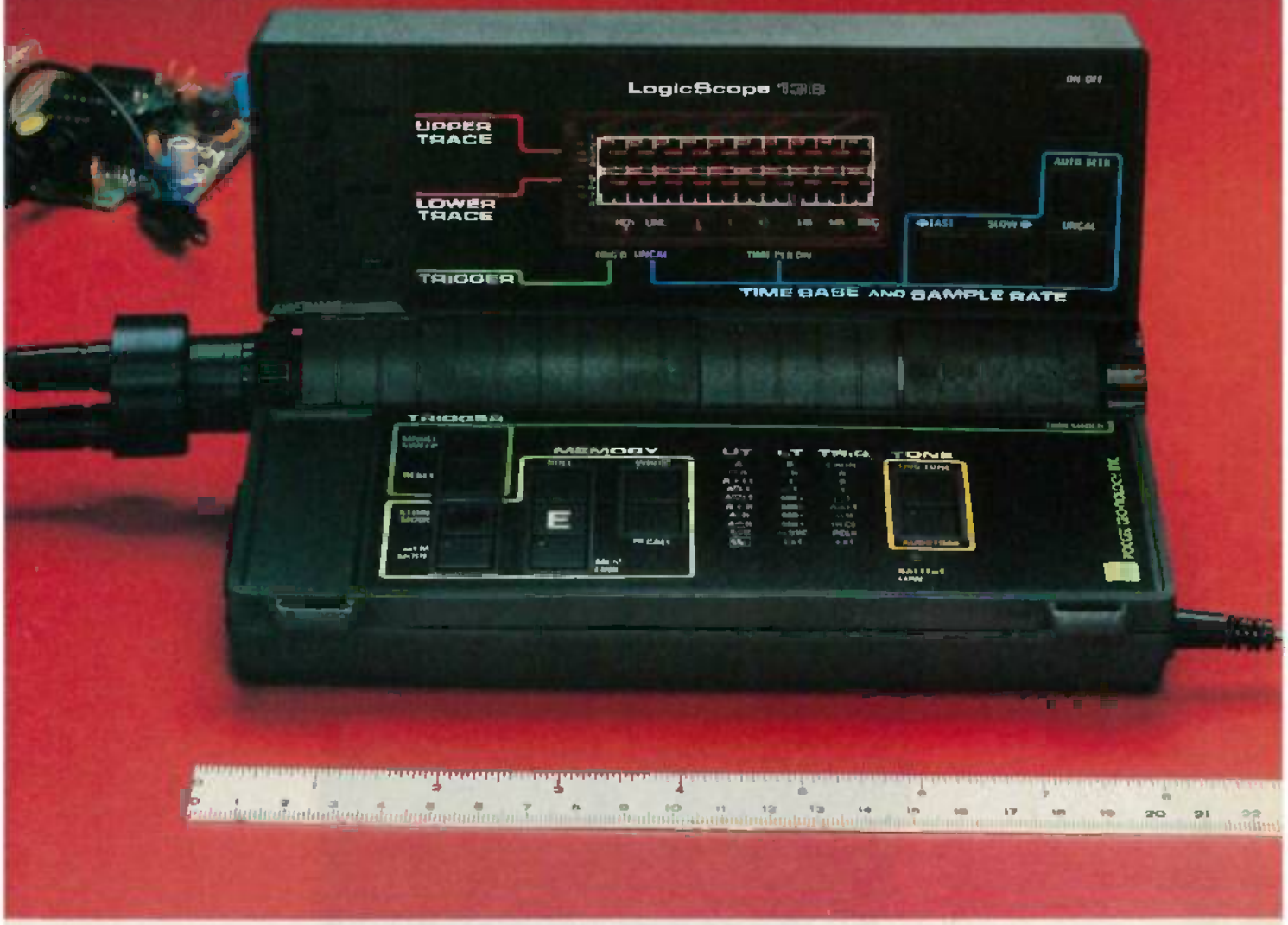

True Dual Trace • 10 MHz Real Time Bandwidth • 3 Input Channels • I/O Port Digital Waveform Storage • Boolean Waveform Operations • Audio Functions 8.25 (L) x 4.5 (D) x 1.75 (H) Inches • 1.25 Pounds • 9 Volt Battery/AC Operation

Consider the LogicScope 136

■ The LogicScope 136 is the next logical step in test instrumentation for you. It combines many of the features and capabilities of sophisticated logic analyzers and oscilloscopes . . . and it fits in your hand. Never before has so much technology been available in so small an instrument, at such a low price.

■ The pocket-sized LogicScope 136 is made possible by a patented breakthrough in display technology. The conventional cathode ray tube has been replaced by a unique array of 400 LED's that permits simultaneous display of two digital waveforms.

■ The 136 can be used for viewing single shot events, or repetitive waveforms. It can be operated in real time mode, or in memory mode which permits acquisition and storage of up to 24 128-bit waveforms. These can be recalled, logically compared (AND, OR, EXCLUSIVE OR) to other stored/input waveforms, or output to an external device via an RS 232 port.

■ Its very low cost, convenience and ease-of-use make the LogicScope the ideal instrument, for designing, troubleshooting or repairing digital systems.

Consider its Engineering & Field Service Applications:

■ On microprocessor-based systems, check the timing relationship of various parameters relative to the system clock and other key events. Its storage capability allows visual and logical comparison of non-repetitive waveforms to known reference signals. Output in the start-up of the digital device can be compared to reference signals to determine the operating state of the device. Questionable waveforms can be stored for analysis.

■ Its light weight and small size make the LogicScope convenient to take on every service call. The 136 provides much more information for trouble shooting a digital system or peripheral than a logic probe or digital multimeter, without having to lug an oscilloscope or logic analyzer along.

Contact us for the name of your local distributor

See us at Wescon '84 Booths 1566 & 1568

POCKET TECHNOLOGY, INC.

7320 Parkway Drive, Hanover, MD 21076

301-796-3300

CIRCLE 32 ON FREE INFORMATION CARD

www.americanradiohistory.com

At CIE, you get electronics career training from specialists.

If you're interested in learning how to fix air conditioning, service cars or install heating systems— talk to some other school. But if you're serious about electronics... even earning an Associate Degree... come to CIE —The Electronics Specialists.

www.americanradiohistory.com

Why trust your education and career future to anything less than a specialist?

You shouldn't. And you certainly don't have to.

If you talked to some of our graduates, chances are you'd find a lot of them shopped around for their training. They pretty much knew what was available. And they picked CIE as number one.

Be sure to shop around. Because, frankly, CIE isn't for everyone.

There are other options for the hobbyist. If you're the ambitious type—with serious career goals in electronics—take a close look at what we've planned for you at CIE.

What you should look for first.

Part of what makes electronics so interesting is it's based on scientific discoveries—on ideas! So the first thing to look for is a program that starts with ideas and builds on them!

That's what happens with CIE's Auto-Programmed® Lessons. Each lesson takes one or two principles and helps you master them—before you start using them!

How practical is the training?

This is the next big important question. After all, your career will be built on what you can do—and on how well you do it.

Here are ways some of CIE's career courses help you get your "hands-on" training...

With CIE's Personal Training Laboratory... you learn and review the basics—perform dozens of experiments. Plus, you use a 3-in-1 precision Multimeter to learn testing, checking, analyzing!

When you get your own 5MHz, solid-state oscilloscope, you take some real professional steps. You use it as a doctor uses an X-ray machine—to "read" waveform patterns...lock them in...study, understand and interpret them!

When you get your Digital Learning Laboratory, you'll be into digital theory—essential training today for anyone who wants to keep pace with the state of the art of electronics. With CIE's Digital Lab, you'll be applying in dozens of fascinating ways the theory you've learned. For example, you'll compare analog and digital devices. You'll learn to make binary to decimal conversions and to work with semiconductor devices and circuits. You'll see how digital equipment is vital to today's exciting, growing fields such as security... where digital theory provides the brains for space-age alarm and protective devices.

You'll build your Microprocessor Training Laboratory, a working microcomputer—from "scratch." You'll also learn how to program and interface it with displays, memories, switches, and more.

Earn An Associate Degree from CIE.

One of the best credentials you can have in electronics—or any other career field—is a college degree. That's why CIE gives you the opportunity to earn an Associate in Applied Science in Electronics Engineering Technology. Any CIE career course can offer you credit toward the degree...more than half of the number needed in some cases.

You can also prepare for the government-administered FCC (Federal Communications Commission) Radiotelephone License, General Class. It can be a real mark in your favor... government-certified proof of your specific knowledge and skills.

Shop around...but send for CIE's free school catalog first!

Mail the card. If it's gone, cut out and mail the coupon. If you prefer to write, mention the name and date of this magazine. We'll send you a copy of CIE's FREE school catalog—plus a complete package of independent home study information! For your convenience, we'll try to have a representative contact you to answer your questions.

Mail the card or coupon—or write: CIE, 1776 East 17th St., Cleveland, OH 44114.

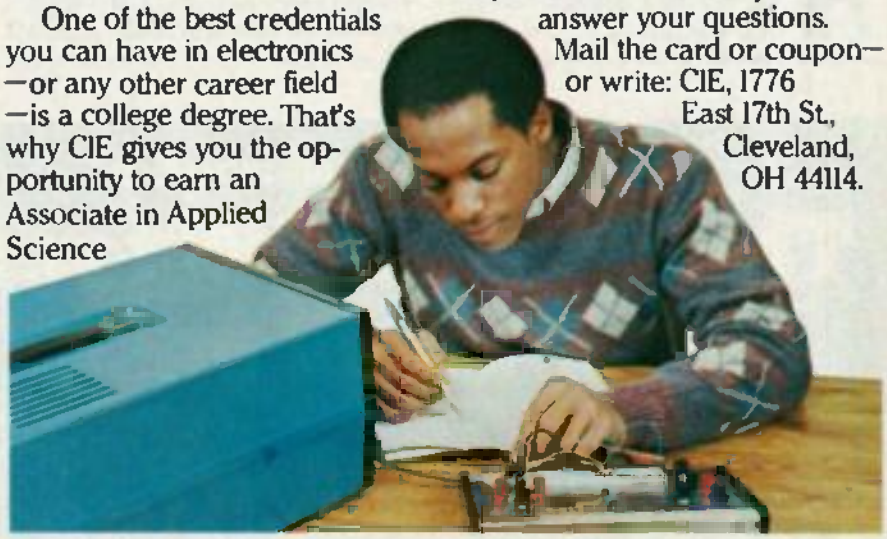

CIE Cleveland Institute of Electronics, Inc.
1776 East 17th Street, Cleveland, Ohio 44114
Accredited Member National Home Study Council

YES... I'm shopping around for the right kind of career training in electronics—and CIE sounds well worth looking into. Please send me my FREE CIE school catalog—including details about the Associate Degree program—plus my FREE package of home study information!

Print Name _____

Address _____ Apt. _____

City _____ State _____ Zip _____

Age _____ Area Code/Phone No. _____

Check box for G.I. Bill information: ☐ Veteran ☐ Active Duty

MAIL TODAY!

RE 90

www.americanradiohistory.com

Bishop Graphics E-Z Circuit Printed-Circuit Design Kits

Making your own PC boards does not have to involve photography, etching, and other headaches.

CIRCLE 102 ON FREE INFORMATION CARD

HOW DO YOU TURN YOUR ON-PAPER electronic circuits into working real-world circuits? How do you take your breadboarded circuit and make a more-permanent version? If it's a complex circuit that uses many IC's, you undoubtedly use a PC board. But what if it's rather simple and uses only a handful of IC's (such as a circuit you read about in "Hobby Corner" or "New Ideas)? For those, making a single PC board probably just isn't worth the effort.

You should know, however, that making a PC board does not have to be a project in itself. It does not have to involve chemicals, etching, and photography—thanks to *E-Z Circuit* printed-circuit copper products from Bishop Graphics (5388 Sterling Center Drive, PO Box 5007E-Z, Westlake Village, CA 91359-5007).

We should say right at the beginning that *E-Z Circuit* cannot *replace* standard PC-board methods—it is not suitable for *all* applications. But when you can use it, the time and trouble you'll save certainly makes it worthwhile. And we should point out that *E-Z Circuit* can be used for other things than making original circuit boards: The copper patterns are ideal for repairing or modifying *existing* PC boards.

The E-Z-Circuit process

With *E-Z Circuit*, you start with a blank board (instead of a copper-clad board) and you put copper on the board where you want it (instead of etching it off where you don't). Therefore, etching (our least-favorite step) is done away with because the only copper on the board is what you put down! Drilling is also done away with because the blank board you use is perforated—as are the foil patterns you place on the board. Camera-ready artwork is also not necessary.

Once you have your layout design finished, you're ready to put the copper patterns on the board. You simply align the adhesive-

A.W. Sperry Instruments introduces

The 4½ digit DMM with the 3½ digit price.

Another A.W. Sperry Instruments first! Our new AWS DM-7010 combines the precision of 4½ digit readings with all the most-wanted features you've been looking for. We've even included a built-in frequency counter (up to 200KHz)! With 9 functions and 33 ranges, the AWS DM-7010's expanded capability can't be beat!

And that's not all! Included among the special functions built into the DM-7010's small, self-contained housing are: conductance, diode test and an instant audible continuity check. The DM-7010 has a basic DC Volt accuracy of 0.05% and loads of built-in safety features.

You'd expect to pay $300 or more for an instrument boasting this kind of performance, yet the AWS DM-7010 can be yours for a low $170! Now there's no need to pay more for the accuracy and quality you need in a DMM.

For more information, call your distributor or A.W. Sperry Instruments, Inc., P.O. Box 9300, Smithtown, N.Y. 11787. 800-645-5398 Toll-Free (N.Y., Hawaii, Alaska call collect 516-231-7050).

A.W. SPERRY INSTRUMENTS INC.
The Measurable Advantage.

CIRCLE 72 ON FREE INFORMATION CARD

www.americanradiohistory.com

NEW! uniden® Bearcat® Products

Communications Electronics,™ the world's largest distributor of radio scanners, is pleased to announce that *Bearcat* brand scanner radios have been acquired by Uniden Corporation of America. Because of this acquisition, Communications Electronics will now carry the complete line of Uniden *Bearcat* scanners, CB radios and Uniden *Bandit*™ radar detectors. To celebrate this acquisition, we have special pricing on the Uniden line of electronic products.

Bearcat® 300-E

List price $549.95/CE price $339.00

7-Band, 50 Channel • Service Search • No-crystal scanner • AM Aircraft and Public Service bands. • Priority Channel • AC/DC

Bands: 32-50, 118-136 AM, 144-174, 421-512 MHz.

The *Bearcat* 300 is the most advanced automatic scanning radio that has ever been offered to the public. The *Bearcat* 300 uses a bright green fluorescent digital display, so it's ideal for mobile applications. The *Bearcat* 300 now has these added features: Service Search, Display Intensity Control, Hold Search and Resume Search keys. Separate Band keys to permit lock-in/lock-out of any band for more efficient service search.

Bearcat® 20/20-E

List price $449.95/CE price $269.00

7-Band, 40 Channel • Crystalless • Searches AM Aircraft and Public Service bands • AC/DC Priority Channel • Direct Channel Access • Delay

Frequency range 32-50, 118-136 AM, 144-174, 420-512 MHz.

Find an easy chair. Turn on your *Bearcat* 20/20 and you're in an airplane cockpit. Listening to all the air-to-ground conversations. Maybe you'll pick up an exciting search and rescue mission on the Coast Guard channel. In a flash, you're back on the ground listening as news crews report a fast breaking story. Or hearing police and fire calls in your own neighborhood, in plenty of time so you can take precautions. You can even hear ham radio transmission, business phone calls and government intelligence agencies. Without leaving your easy chair. Because you've got a *Bearcat* 20/20 right beside it.

The *Bearcat* 20/20 monitors 40 frequencies from 7 bands, including aircraft. A two-position switch, located on the front panel, allows monitoring of 20 channels at a time.

Bearcat® 210XL-E

List price $349.95/CE price $209.00

8-Band, 18 Channel • Crystalless • AC/DC

Frequency range 32-50, 144-174, 421-512 MHz.

The *Bearcat* 210XL scanning radio is the second generation scanner that replaces the popular *Bearcat* 210 and 211. It has almost twice the scanning capacity of the *Bearcat* 210 with 18 channels plus dual scanning speeds and a bright green fluorescent display. Automatic search finds new frequencies. Features scan delay, single antenna, patented track tuning and more.

Bearcat® 260-E

List price $399.95/CE price $249.00

8-Band, 16 Channel • Priority • AC/DC

Frequency range 30-50, 138-174, 406-512 MHz.

Keep up with police and fire calls, ham radio operators and other transmission while you're on the road with a *Bearcat* 280 scanner. Designed with police and fire department cooperation, its unique, practical shape and special two-position mounting bracket makes hump mounted or under dash installation possible in any vehicle. The *Bearcat* 260 is so ruggedly built for mobile use that it meets military standard 810c, curve y for vibration rating. Incorporated in its rugged, all metal case is a specially positioned speaker delivering 3 watts of crisp, clear audio.

NEW! Bearcat® 201-E

List price $279.95/CE price $179.00

9-Band, 16 Channel • Crystalless • AC only Priority & Scan Delay • One Key Weather

Frequency range 30-50, 118-136 AM, 146-174, 420-512 MHz.

The *Bearcat* 201 performs any scanning function you could possibly want. With push button ease, you can program up to 16 channels for automatic monitoring. Push another button and search for new frequencies. There are no crystals to limit what you want to hear.

NEW! Bearcat® 180-E

List price $249.95/CE price $149.00

8-Band, 16 Channel • Priority • AC only

Frequency range: 30-50, 138-174, 406-512 MHz.

Police and fire calls. Ham radio transmissions. Business and government undercover operations. You can hear it all on a *Bearcat* 180 scanner radio. Imagine the thrill of hearing a major news event unfold even before the news organizations can report it. And the security of knowing what's happening in your neighborhood by hearing police and fire calls in time to take precautions. There's nothing like scanning to keep you in-the-know, and no better way to get scanner radio performance at a value price than with the *Bearcat* 180.

Bearcat® 100-E

The first no-crystal programmable handheld scanner.

List price $449.95/CE price $234.00/***SPECIAL!***

8-Band, 16 Channel • Liquid Crystal Display Search • Limit • Hold • Lockout • AC/DC

Frequency range: 30-50, 138-174, 406-512 MHz.

The world's first no-crystal handheld scanner has compressed into a 3" x 7" x 1¾" case more scanning power than is found in many base or mobile scanners. The *Bearcat* 100 has a full 16 channels with frequency coverage that includes all public service bands (Low, High, UHF and "T" bands), the 2-Meter and 70 cm Amateur bands, *plus* Military and Federal Government frequencies. It has chrome-plated keys for functions that are user controlled, such as lockout, manual and automatic scan. Even search is provided, both manual and automatic. Wow...what a scanner!

The *Bearcat* 100 produces audio power output of 300 milliwatts, is track-tuned and has selectivity of better than 50 dB down and sensitivity of 0.6 microvolts on VHF and 1.0 microvolts on UHF. Power consumption is kept extremely low by using a liquid crystal display and exclusive low power integrated circuits.

Included in our low CE price is a sturdy carrying case, earphone, battery charger/AC adapter, six AA ni-cad batteries and flexible antenna. The *Bearcat* 100 is in stock for quick shipment, so order your scanner today.

Bearcat® DX1000-E

List price $649.95/CE price $489.00

Frequency range 10 kHz to 30 MHz.

The *Bearcat* DX1000 shortwave radio makes tuning in London as easy as dialing a phone. It features PLL synthesized accuracy, two time zone 24-hour digital quartz clock and a built-in timer to wake you to your favorite shortwave station. It can be programmed to activate peripheral equipment like a tape recorder to record up to five different broadcasts, any frequency, any mode, while you are asleep or at work. It will receive AM, LSB, USB, CW and FM broadcasts.

There's never been an easier way to hear what the world has to say. With the *Bearcat* DX1000 shortwave receiver, you now have direct access to the world.

Uniden® PC22-E

List price $159.95/CE price $99.00

The *Uniden* PC22 is a 40 channel AM remote mobile CB radio. It's the answer for today's smaller cars which don't always provide adequate space for mounting. Since all the controls are on the microphone, you can stash the "guts" in the trunk. The microphone has up/down channel selector, digital display, TX/RX indicator and external speaker jack. Dimensions: 5¾" W x 7⅞" D x 1⅞" H. 13.8 VDC, positive or negative ground.

QUANTITY DISCOUNTS AVAILABLE

Order two scanners at the same time and deduct 1%, for three scanners deduct 2%, four scanners deduct 3%, five scanners deduct 4% and six or more scanners purchased at the same time earns you a 5% discount off our super low single unit price.

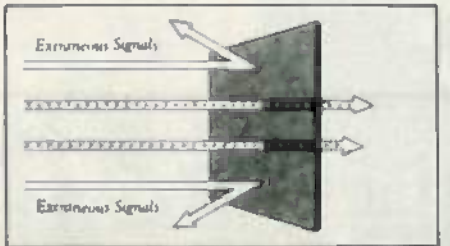

Both Bandit™ radar detectors feature E.D.I.T.™ the Electronic Data Interference Terminator that edits-out false alarm signals

Uniden® PC33-E

List price $59.95/CE price $44.00

The *Uniden* PC33 boasts a super-compact case and front-panel mike connector to fit comfortably in today's smaller cars. *Controls:* Power & Volume, Squelch. *Switches:* ANL. Other features of the PC33 include Graduated LED "S"/RF Meter, Digital channel indicator. Dimensions: 6" W x 6" D x 1⅞" H. ±13.8 VDC.

Uniden® PC55-E

List price $89.95/CE price $59.00

The full featured *Uniden* PC55 front-panel mike connector makes installation easier when space is a factor. It has ANL, PA-CB, Channel 9 and RF Gain switches. LED "S"/RF meter, TX lite, PA & external speaker jacks. Dimensions: 6" W x 6" D x 1⅞" H. ±13.8 VDC.

Bandit™ Radar Detectors

Now that everyone else has taken their best shot at radar detection, the Uniden Bandit™ has done them one better...with E.D.I.T.™ the Electronic Data Interference Terminator that actually edits-out false alarm signals.

The Bandit 55, features a convenient brightness/dimmer control for comfortable day or night driving, plus a handy highway/city control for maximum flexibility wherever you drive. The Bandit 95 Remote, is a two-piece modular unit that lets you mount the long-range radar antenna behind the grill, out of view. The ultra-compact control unit can then be inconspicuously tucked under the dash or clipped to the visor. Order Bandit 55-E for $119.00 each or the Bandit 95-E Remote for $139.00 each.

OTHER RADIOS AND ACCESSORIES

FB-E-E Frequency Directory for Eastern U.S.A.	$12.00
FB-W-E Frequency Directory for Western U.S.A.	$12.00
BC-WA-E Bearcat Weather Alert™	$35.00
A60-E Magnet mount mobile antenna	$35.00
A70-E Base station antenna	$35.00

Add $3.00 shipping for all accessories ordered at the same time. Add $3.00 shipping per scanner antenna.

BUY WITH CONFIDENCE

To ***get the fastest delivery from CE*** of any product in this ad, send or phone your order directly to our Scanner Distribution Center.™ Michigan residents please add 4% sales tax or supply your tax I.D. number. Written purchase orders are accepted from approved government agencies and most well rated firms at a 10% surcharge for net 10 billing. All sales are subject to availability, acceptance and verification. All sales on accessories are final. Prices, terms and specifications are subject to change without notice. All prices are in U.S. dollars. Out of stock items will be placed on backorder automatically unless CE is instructed differently. A $5.00 additional handling fee will be charged for all orders with a merchandise total under $50.00. Shipments are F.O.B. Ann Arbor, Michigan. No COD's. Most products that we sell have a manufacturer's warranty. Free copies of warranties on these products are available prior to purchase by writing to CE. International orders are invited with a $20.00 surcharge for special handling *in addition* to shipping charges. Non-certified checks require bank clearance.

Mail orders to: Communications Electronics,™ Box 1002, Ann Arbor, Michigan 48106 U.S.A. Add $7.00 per scanner, radar detector or CB or $12.00 per shortwave receiver for U.P.S. *ground* shipping and handling in the continental U.S.A. For Canada, Puerto Rico, Hawaii, Alaska, or APO/FPO delivery, shipping charges are three times continental U.S. rates. If you have a Visa or Master Card, you may call and place a credit card order. Order toll-free in the U.S. Dial 800-521-4414. In Canada, order toll-free by calling 800-221-3475. WUI Telex CE anytime, dial 671-0155. If you are outside the U.S. or in Michigan dial 313-973-8888. Order today.

Scanner Distribution Center™ and CE logos are trademarks of Communications Electronics.™ Ad # 070184-E

† *Bearcat* is a registered trademark of Uniden Corporation.

Copyright© 1984 Communications Electronics

Order Toll Free . . . call 1-800-521-4414

COMMUNICATIONS ELECTRONICS™

Consumer Products Division

616 Phoenix ☐ Box 1002 ☐ Ann Arbor, Michigan 48106 U.S.A.
Call TOLL-FREE 800-521-4414 or outside U.S.A. 313-973-8888

CIRCLE 26 ON FREE INFORMATION CARD

www.americanradiohistory.com

backed copper patterns with the pre-drilled holes, and press in place. If you want to move a pattern, you can—until the adhesive cures. (After that time, the pattern can still be removed if you need to make changes to the board, but it cannot be re-used.

Once you have your component-mounting pads in place, you can interconnect them with copper tape. When traces cross, you have two choices: You can use the supplied insulating polyester tape between the two crossing traces, or you can run one of the traces on the other side of the board.

That ability to make double-sided boards (which, interestingly, is not mentioned in the *E-Z Circuit* instruction manual) is very important. That's because the copper-tape traces are thicker than what you can etch, so you cannot run them between, for example, IC-pin pads. Being able to run traces on both sides of the board helps to compensate for that.

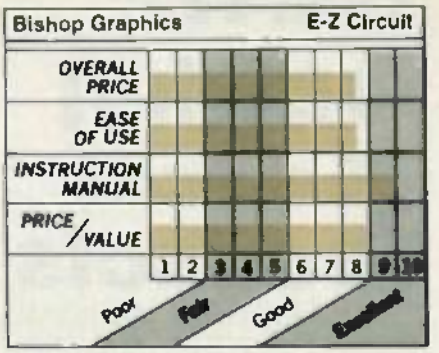

Once all of your pads and interconnecting traces are in place, they must be soldered together. (Even though a trace may be attached to another by the adhesive backing, they are not electrically connected until they are soldered.) The final step, of course, is inserting the components and soldering them to the copper patterns. The component-mounting pads have an epoxy-glass substrate and can be soldered many times. The traces and donut pads, however, do not have that thermal barrier. When they are soldered, the adhesive can soften and the patterns can slide and/or lift from the board. If you solder with that in mind (and you keep your soldering iron in a vertical position), you won't have any trouble. The adhesive regains full strength when it cools.

What's available

While the *E-Z Circuit* patterns are available separately, their kits offer a better value. Four kits, which should fill the needs of most hobbyists, are available. Each kit consists of more than 200 pieces, including such pressure-sensitive copper configurations as donut pads, multi-conductor strips, and power distribution strips, as well as TO-5, power-transistor, SCR, and DIP mounting patterns.

The difference between the kits is the type of boards (and card-edge patterns) they contain. For example, the *AppleKit* contains an *E-Z Bus* board (that is shaped the same as any apple card) and self-adhesive card-edge connections. The S-100 kit includes an S-100 board, the standard-bus kit includes a standard-bus board, and the *Eurokit* contains two eurocard boards. Kit prices vary from about $63 to $68. R-E

Our Twelve Inexpensive Ways To Look Inside Your ICs.

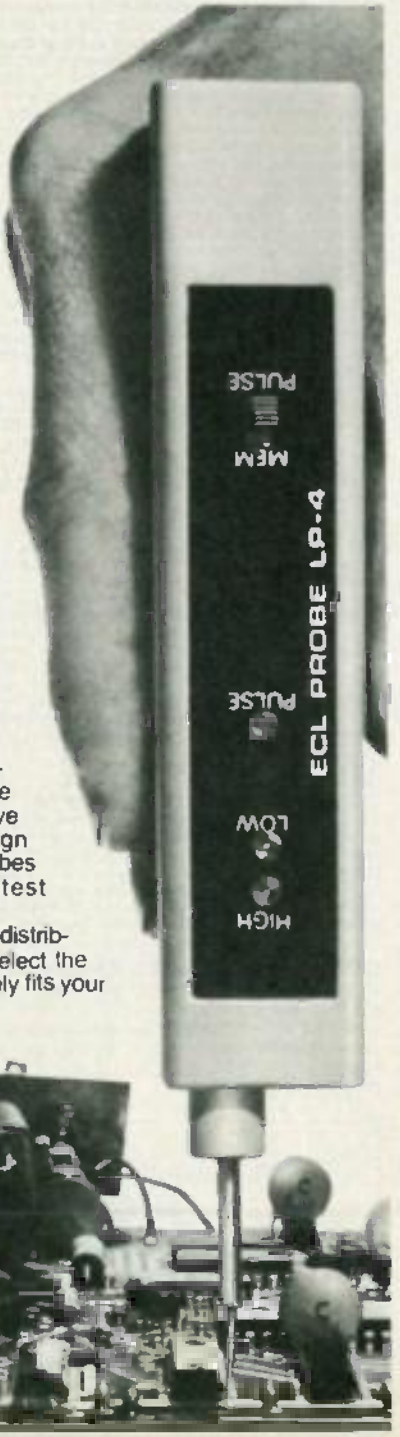

Testing and troubleshooting digital circuitry no longer requires expensive equipment and complex, time-consuming processes. Global Specialties offers a family of twelve inexpensive and easy-to-use logic-test products ranging from hand-held digital logic probes and pulsers to multi-point logic monitors.

These IC troubleshooting tools provide fast, accurate testing of all logic families in laboratories, production, quality control and field service applications. We've advanced the design and use of logic probes and other digital test products.

Your local Global distributor can help you select the model which precisely fits your needs.

Global Logic test family . . .

- LM-1 Clip Type 16 Ch. LM
- LM-2A Pocket Size 16 Ch. LM
- LM-4 Pocket Size 40 Ch. LM
- LP-1 Low Cost Dual State Probe
- LP-2 Dual State Probe
- LP-3 High Speed Probe
- LP-4 High Speed ECL Probe
- DP-1 Probe Type Digital Pulser
- LPK-1 Dual State Probe (Kit)
- DPK-1 Probe Type Digital Pulser (Kit)
- LTC-1 Logic Analyze Test Kit
- LTC-2 High Speed Logic Analyze Test kit

Call our ***Product Availability Phone:*** 1-800-243-6077

GLOBAL SPECIALTIES
An Interplex Electronics Company
70 Fulton Terrace
New Haven, CT 06512-1819
(203) 624-3103 TWX: 710-465-1227

CIRCLE 33 ON FREE INFORMATION CARD

www.americanradiohistory.com

ELECTRONICS BOOK CLUB

The Best Source for Hobbyists and Professionals for Over 18 Years!

Time- and Money-Saving Advice . . . Practical Troubleshooting & Repair Tips . . . State-of-the-art Technology . . . Hundreds of Projects . . . Plus, Exceptional Savings

Select 5 Books for Only $2.95

Values to $110.75

1553
List $15.95

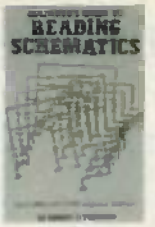

1536
List $14.95

1682
List $14.95

1604
List $24.95

800
List $19.95 (paper)

1699
List $21.95

1679
List $17.95

1686
List $17.95

1449
List $19.95

1605
List $16.95

1565
List $16.95

1108
List $16.95

1699
List $19.95

1487
List $15.95

1561
List $19.50 (paper)

1765
List $21.95

1677
List $19.95

1673
List $13.95

1474
List $18.95

1650
List $19.95

1537
List $16.95

1409
List $16.95

1276
List $16.95

1632
List $16.95

1539
List $19.95

1531
List $17.95

1199
List $19.95

1503
List $21.95

FREE guide to mail order sources for electronic parts and components
A $6.95 Value!

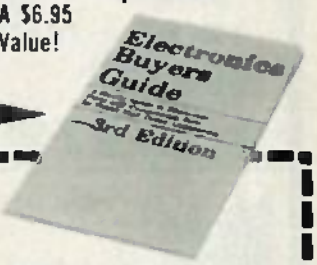

FREE When You Join Now

7 very good reasons to join the Electronics Book Club

- **Big Savings.** Save 20% to 75% on books sure to increase your electronics know-how
- **No-Risk Guarantee.** All books returnable within 10 days without obligation
- **Club News Bulletins.** All about current selections—mains, alternates, extras—plus bonus offers. Comes 13 times a year with hundreds of up-to-the-minute titles you can pick from
- **"Automatic Order."** Do nothing, and the Main selection will be shipped automatically! But . . . if you want an Alternate selection—or no books at all—we'll follow the instructions you give on the reply form provided with every News Bulletin
- **Bonus Books.** Immediately get a Dividend Certificate with every book purchased and qualify for big discounts of 60% to 80%
- **Extra Bonuses.** Take advantage of added-value promotions, plus special discounts
- **Exceptional Quality.** All books are first-rate publisher's editions selected by our Editorial Board and filled with useful, up-to-the-minute information

ELECTRONICS BOOK CLUB
P.O. Box 10
Blue Ridge Summit, PA 17214

Please accept my membership in the Electronics Book Club and send the 5 volumes circled below, *plus*, my FREE copy of *The Electronics Buyer's Guide*, billing me $2.95 plus shipping and handling charges. If not satisfied, I may return the books within ten days without obligation and have my membership canceled. I agree to purchase 3 or more books at reduced Club prices (plus shipping/handling) during the next 12 months, and may resign any time thereafter.

800 1108 1199 1218 1409 1449 1474 1487 1503
1531 1536 1537 1539 1553 1561 1565 1577 1604 1605
1632 1650 1665 1673 1679 1682 1685 1699 1765

Name _____ Phone _____
Address _____
City _____
State _____ Zip _____

Valid for new members only. Foreign applicants will receive special ordering instructions. Canada must remit in U.S. currency. This order subject to acceptance by the Electronics Book Club.
RE-1184

CIRCLE 55 ON FREE INFORMATION CARD

www.americanradiohistory.com

NEW PRODUCTS

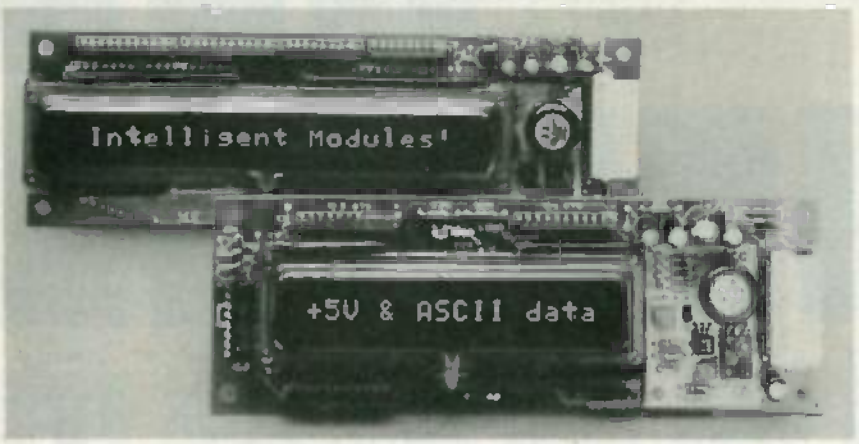

CIRCLE 121 ON FREE INFORMATION CARD

INTELLIGENT MODULES, model *3600-80-016* and model *3600-81-020* are the latest additions to the FLIP family of vacuum fluorescent display modules. Each is a single-board module.

The model *3600-80-016* displays 1 line of 16 characters and measures 6.37" wide × 2.20" high × 0.70" deep. The model *3600-81-020* displays 1 line of 20 characters and measures 6.92" wide × 2.20" high × 0.70" deep.

For the user's convenience, an integral switching power-supply

B&K PRECISION

OSCILLOSCOPES

Fall Specials!

MODEL 1590P
REG $1995.00
100 MHz 8-TRACE
4 CHANNEL
DUAL TIME
Now $1579.95

MODEL 1570P
REG $1395.00
80 MHz QUAD INPUT
DUAL TIME
Now $1095.00

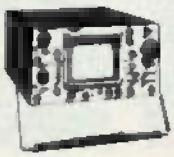

MODEL 1560P
REG $1150.00
60 MHz
TRIPLE TRACE
Now $899.95

MODEL 1540P
REG $950.00
40 MHz
DUAL TRACE
Now $799.95

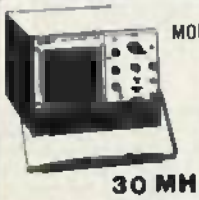

MODEL 1479BP
REG $795.00
30 MHz
DUAL TRACE
Now $635.00

REG $695.00
MODEL EE-482
20 MHz
DUAL TRACE (EICO)
Now $450.00

REG $545.00
MODEL 1476A
10 MHz
DUAL TRACE
Now $435.00

MODEL 31B-430
REG $299.95
6.5 MHz
SINGLE TRACE (KRISTA)
Now $189.95

OMNITRON
ELECTRONICS
770 Amsterdam Ave., New York, NY 10025
■ Write for FREE 136 page Catalog ■

SHIPPING CHARGES

For Orders	ADD
$25 - $100.	$6.50
$100 - $500	$8.50
$500 - $750	$10.50
$750 - and up	$15.00
Parcel Post	$20.00

MASTER CARD • VISA

Send Purchase Order, Check, Money Order or C.O.D.
or Call Toll Free
800-223-0826
in N.Y. State (212) 865-5580

CIRCLE 90 ON FREE INFORMATION CARD

www.americanradiohistory.com

provides all required drive voltages from a single +5-volt DC input. An on-board ASCII interface controller handles all scan, refresh, and data I/O tasks, permitting easy interface to an 8-bit data bus.

The devices display an extended ASCII character set of upper- and lower-case letters, numbers, and symbols using a 0.20" high 5 × 7 dot matrix. Display color is a bright, broad-spectrum emission, which peaks in the blue-green, and is easily filtered to a wide range of colors. Viewing angle is typically 150 degrees.

The model *3600-80-016* is priced at $74.00 each for 100 pieces; the model *3600-80-016* is priced at $79.00 each for 100 pieces.—**Industrial Electronic Engineers, Inc.**, 7740 Lemona Ave., Van Nuys, CA 91405.

DMM, model *8840A*, is a 5½" digit benchtop/system that provides basic accuracy of 0.005% for one year with a 24-hour specifications of 0.002%. Complete software calibration, either manually or over the bus, makes it easy to maintain the 24-hour specifications routinely in those applications requiring optimized accuracy.

CIRCLE 122 ON FREE INFORMATION CARD

At reading rates of 2.5 and 20 readings per second, the model *8840A* has 5½ digit resolution. At the fast rate of 100 readings per second, the resolution is 4½ digits. The model *8840A* is priced at $95.00. It is available with two options for true RMS AC and fully programmable IEEE-*488* interface ($150.00 each). A fully loaded package sells for $995.00. —**John Fluke Mfg. Co., Inc.**, PO Box C9090, Everett, WA 98206.

POWER SUPPLY, model *WP-29A* is designed to provide an isolated AC

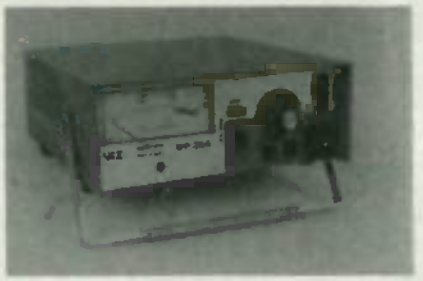

CIRCLE 123 ON FREE INFORMATION CARD

output from 0 to 150 volts, 0–2.25 amps continuous at 60 Hz. Input voltage and isolated output voltage can be monitored on a large, taut-band meter.

Secondary leakge is limited to less than 0.1 milliamp—lower than the established ANSI limits in Specification Code C-101. The unit is designed for incoming or outgoing quality control, servicing, or design work where testing circuits at higher or lower than normal voltages is required. The model *WP-29A* is priced at $167.00 — **VIZ Test Equipment**, 335 East Price Street, Philadelphia, PA 19144. R-E

STOP!

Before you check those other catalogs..

Check the best first,and save time!

The 15th edition:CEI'S 1984 fall catalog

CALL TOLL FREE FOR YOUR FREE CATALOG!

1-800-543-3568 NATIONAL WATS **1-800-762-3412** OHIO WATS

IN DAYTON:(513)252-5662 TELEX NO.288-229

CEI Consolidated Electronics, Incorporated

705 WATERVLIET AVE,DAYTON OHIO.45420

CIRCLE 18 ON FREE INFORMATION CARD

www.americanradiohistory.com

New from B&K-PRECISION, for telephone service, test and repair

COMPLETE TELEPHONE PRODUCT ANALYZER. A total self-contained system for diagnostic testing, servicing and calibration of corded and cordless telephones, answering machines and automatic dialers. Performs every test you'll ever need to test and repair any phone product including verification of pulse and touch-tone numbers, measurement of frequency error and modulation deviation. **MODEL 1050 $1695**

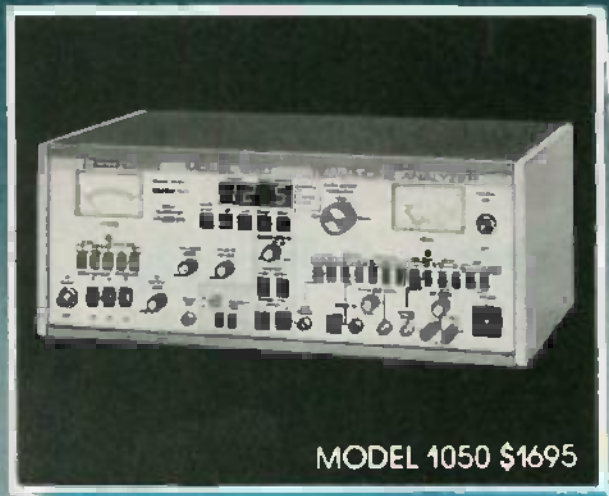

CORDLESS TELEPHONE TESTER. Provides full servicing and calibration capability for base and portable phone units. All rf test and measurement functions. Replaces expensive FM generators and modulation monitors, yet performs all tests required for cordless phone system analysis and repair. Including full frequency testing and alignment. Generates all prior and recently approved frequencies. **MODEL 1047 $895**

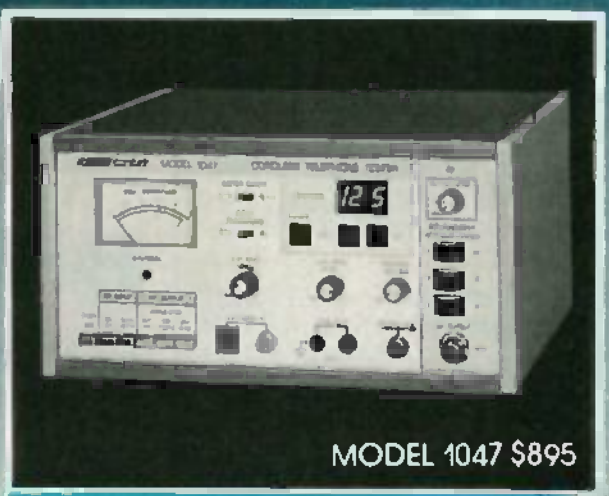

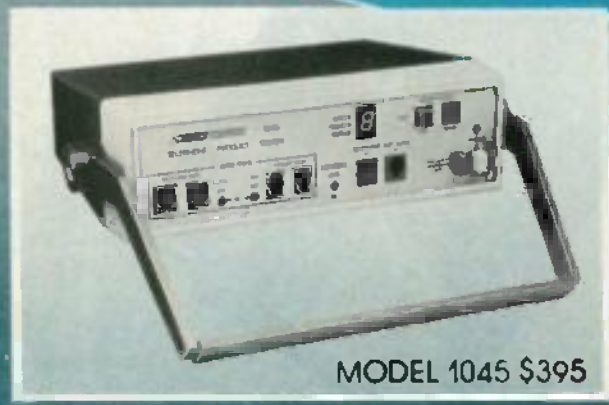

TELEPHONE PRODUCT TESTER. For in-store consumer or service use. Tests handset cord, phone line cord, dial/redial functions, voice and dial number levels, ring function and voice quality of corded and cordless phones, answering machines and automatic dialers. **MODEL 1045 $395**

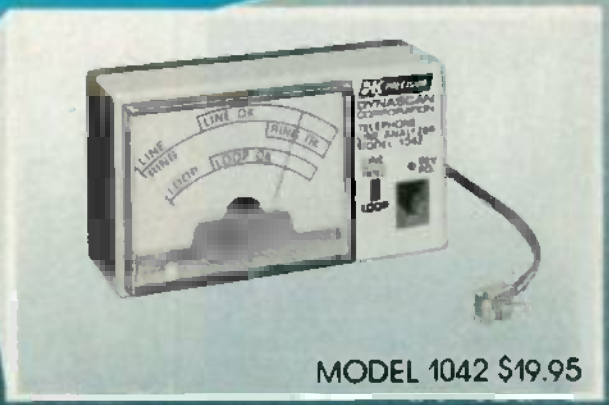

TELEPHONE LINE ANALYZER. Quickly identifies a problem as external or in the phone itself. Tests for condition of external phone line, phone line cord, ring and line voltage levels and polarity. Easy to use, no batteries or external power needed. **MODEL 1042 $19.95**

These test instruments cover every possible level of service required for telephone products. They are equally useful for training. The instruction manuals provided offer a comprehensive course of training for service personnel and students. Call your nearest B&K-PRECISION distributor for off-the-shelf-delivery or additional information—or contact B&K-PRECISION.

B&K PRECISION DYNASCAN CORPORATION

6460 West Cortland Street • Chicago, Illinois 60635 • 312 889-9087

International Sales 6460 W Cortland St Chicago IL 60635
Canadian Sales Atlas Electronics Ontario
South and Central American Sales Empire Exporters Plainview NY 11803

CIRCLE 16 ON FREE INFORMATION CARD

www.americanradiohistory.com

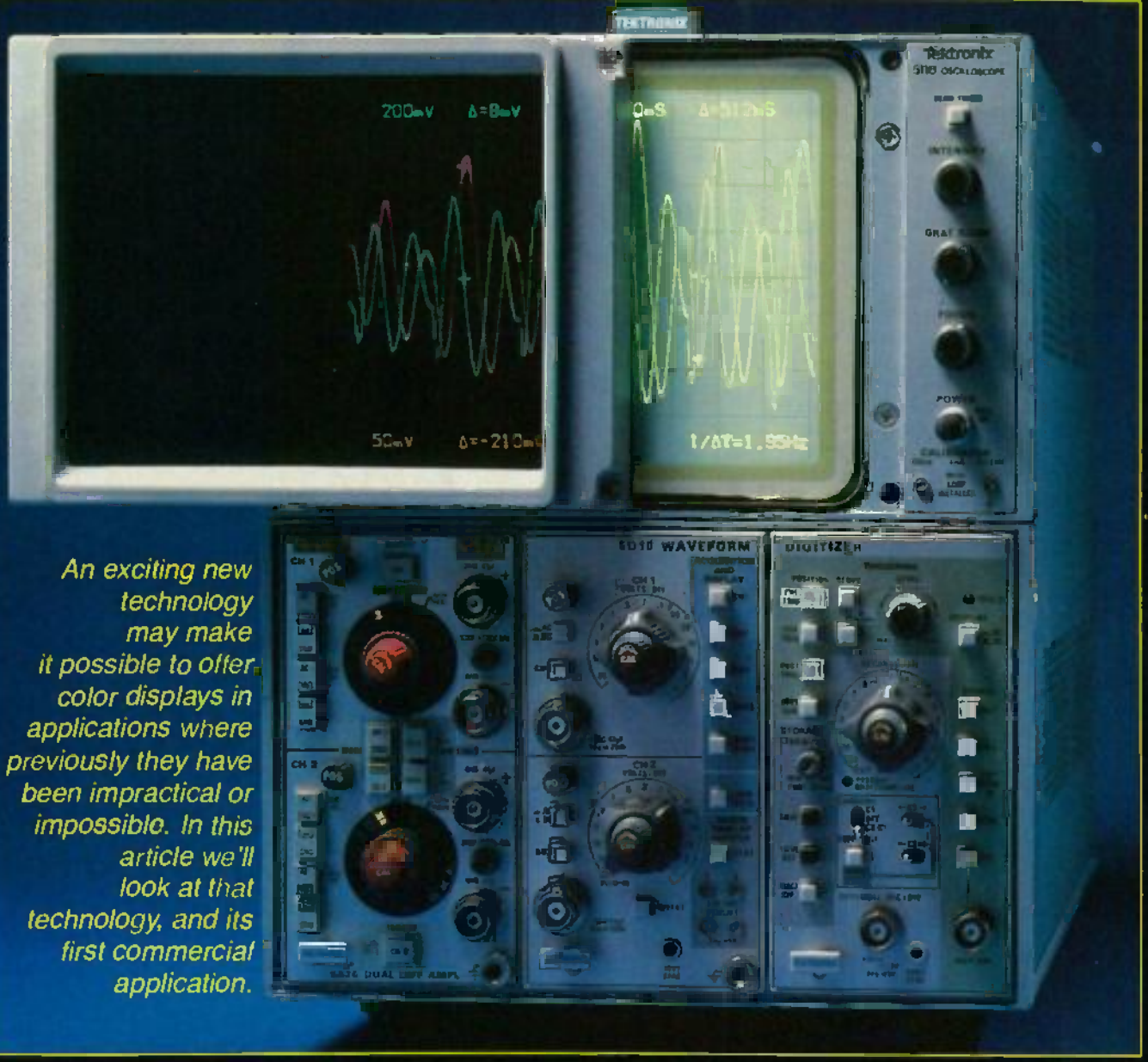

An exciting new technology may make it possible to offer color displays in applications where previously they have been impractical or impossible. In this article we'll look at that technology, and its first commercial application.

OSCILLOSCOPES IN COLOR

CARL LARON
ASSOCIATE EDITOR

MOST READERS OF RADIO-ELECTRONICS are familiar with shadow-mask CRT's. Those CRT's are used in the vast majority color display applications, including the most familar of all, the color TV. But several breakthroughs in color-display technology have recently occurred: breakthroughs that could eventually make the shadow-mask color CRT obsolete.

One of the most recent of those breakthroughs is the new liquid-crystal color shutter (or switch) from Tektronix (PO Box 500, Beaverton, OR 97077). The color shutter is used in combination with a high-resolution *monochrome* CRT and allows the monochrome CRT to display *color* images. The system developed by Tektronix offers the advantage of high-resolution color—much higher than possible with shadow-mask CRT's—at a reasonable cost. We'll take a closer look at the color shutter in a moment, but first let's take time to review some important LCD basics.

www.americanradiohistory.com

LCD basics

A liquid crystal is an organic compound; that means that it is a compound that consists of carbon, hydrogen, oxygen, and nitrogen. What is different about a liquid-crystal compound is that it is fluid like a liquid, but has the optical properties of a solid.

Another interesting property of a liquid crystal is that its molecules, which are shaped like long rods, act like dipoles in the presence of an electric field. That means that the alignment of molecules in a liquid crystal can be controlled by applying and removing an electric field.

Liquid-crystal displays differ from other types of displays in that they scatter rather than generate light. The type of LCD used in watches and calculators, as well as in the color shutter, consists of a vertical polarizer, a liquid-crystal cell (the cell used in the shutter will be described below), and a horizontal polarizer. When there is no electric field present, the liquid-crystal material is in its relaxed state. In that state, the liquid-crystal molecules nearest the polarizers have their long axes parallel to the polarizers with subsequent layers twisting through the 90° between horizontal and vertical (see Fig. 1-a). Light from the light source passes through the horizontal polarizer, is twisted 90° by the liquid crystal, and passes out through the vertical polarizer. Someone looking at the LCD will see light.

When an electric field is applied, the liquid-crystal material is in its driven state. In that state, the liquid-crystal molecules are oriented parallel to the direction of the field (see Fig. 1-b). Because of that, the natural twist is destroyed, and hence, the light is not rotated by the LCD. Therefore the light is absorbed by the vertical polarizer and a viewer would see a dark area.

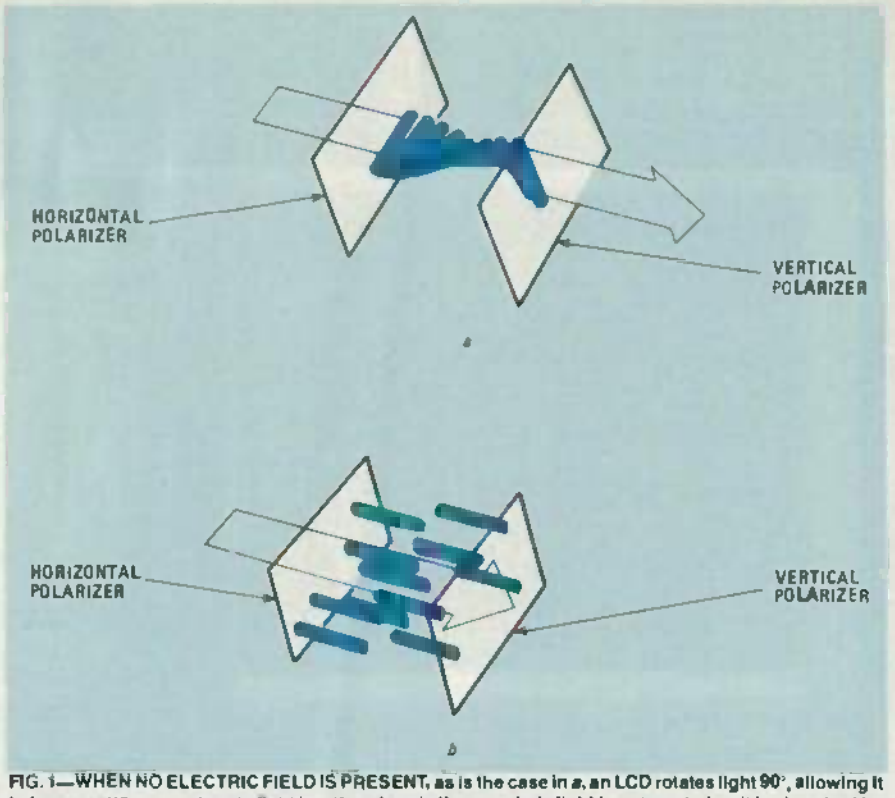

FIG. 1—WHEN NO ELECTRIC FIELD IS PRESENT, as is the case in *a*, an LCD rotates light 90°, allowing it to be seen. When an electric field is present, as is the case in *b*, light is not rotated so it is absorbed by the polarizer.

The π cell

Tektronix' major accomplishment in developing the color shutter was in devising a liquid-crystal device, called a π cell, with a fast-enough switching time. Most liquid crystals switch (change between a relaxed and a driven state) at rate of 20 to 100 milliseconds. The π cell has a switching time of 1.7 milliseconds.

The π-cell consists of two glass plates coated with indium-tin-oxide, a thin layer of silicon-dioxide (which serves as an insulator), and a special alignment layer. It has a special structure in which the liquid-crystal molecules are arranged so that when the applied electric field is removed, the liquid flow within the cell does not oppose the natural rotation of the liquid-crystal molecules into their relaxed (twisted) orientation. That is the key to the fast switching times.

Another factor in developing the π-cell was the thin cell spacing that Tektronix has achieved. The cell spacing must be very accurate because the switching characteristics described above depend on the cell being very thin and uniform. If the cell is made too thin, however, it will not have the required optical properties. The company has developed techniques for cell spacings of 3 to 10 micrometers with a tolerance of 300 nanometers. Cells with that spacing have been manufactured in sizes ranging from 5 to 40 centimeters, although the actual viewing area is only about 90% of the cell size; that limited viewing area is due to mounting considerations.

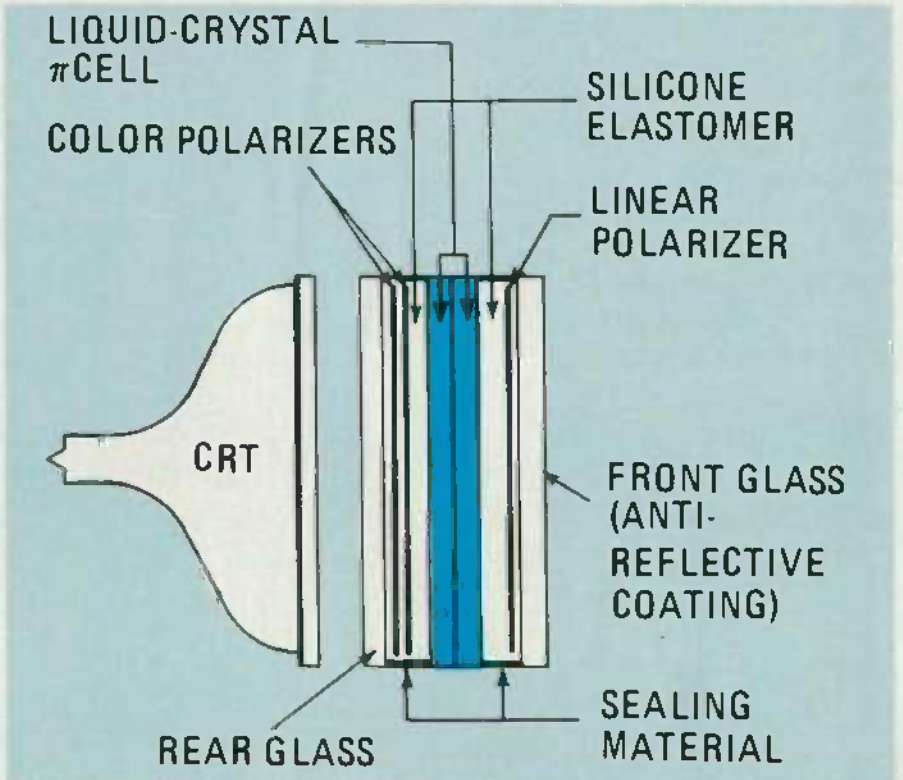

FIG. 2—TO MAKE THE COLOR SHUTTER, the π- cell is sandwiched between, and optically coupled to, a pair of orthogonal color polarizers and a linear polarizer.

www.americanradiohistory.com

The color shutter

To make the color shutter, the π cell is sandwiched between, and optically coupled to, an orthogonal set of color polarizers (orange and blue-green) and a horizontal linear polarizer (see Fig. 2). The "sandwich" is then placed in front of a CRT that uses a phosphor whose emission peaks are in the orange and blue-green portions of the spectrum (see Fig. 3).

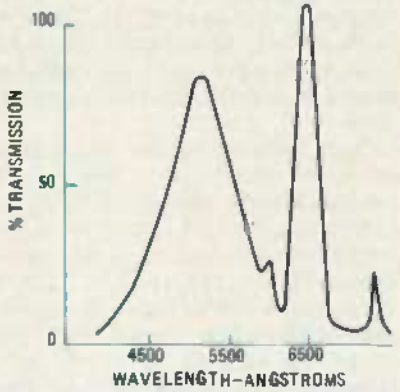

FIG. 3—IN THE CURRENT TEKTRONIX SYSTEM, a CRT with a phosphor whose emission peaks lie in the orange and blue-green regions is used.

To generate a multi-color display, both the screen and the shutter are switched synchronously. A block diagram of the system is shown in Fig. 4. In one frame, all of the information that should appear in orange is displayed. In the next frame, all of the information that should appear in blue-green is displayed.

The role of the π cell in this system is to be sure that only light of the appropriate color will be passed. Orange light entering the shutter is vertically polarized by the orange polarizer; blue-green light entering the shutter is horizontally polarized by the blue-green polarizer. (Note that the color polarizers also polarize white light as indicated in Fig. 4.) During the "orange" frame, the liquid-crystal is in its undriven state. Orange light is thus rotated 90° by the liquid-crystal and passes through the horizontal linear polarizer. The horizontally polarized blue-green light is also rotated, but it is rotated out of the transmission axis of the linear polarizer and is thus absorbed.

During the "blue-green" frame, the liquid-crystal molecules are oriented so that they do not twist light. Thus, the horizontally polarized blue-green light is passed by the horizontal linear polarizer while the vertically-polarized orange light is absorbed.

As the alternate frames are viewed, the eye integrates them to produce a multi-colored image. With the phosphor/polarizer combination used in this system, any color that can be created by combining orange and blue-green can be displayed by varying the intensity of the scanning beam. To achieve flicker-free operation, each color (frame) is repeated at a rate of 60 Hz; thus, the two field system will run at a rate of 120 Hz.

Although orange and blue-green are the colors chosen by Tektronix, any two colors could be used through the proper selection of color polarizers and phosphors. For instance, early versions of the color shutter used red and green. The colors chosen for the current shutter were selected because they, and neutral (a color formed by the combination of the two primary colors and used in the first commercial application of the new technology—more on that later), are spectrally separated enough to be easily distinguishable, but close enough to minimize the eye's need to refocus.

As indicated above, only colors that can be generated by combinations of two primary colors can be displayed. Tektronix is continuing with its research in order to develop a shutter capable of displaying colors that could be produced by three primary colors. Such a shutter would be capable of producing a full gamut of colors, with results comparable to, or better than, conventional color displays.

Advantages

The development of the liquid-crystal color shutter is important for a number of reasons. Perhaps most significant is its high resolution. Because a monochrome CRT is used in place of a shadow mask (or other type, such as penetration-phosphor) color CRT, much better resolution is possible than with any other type of color display. That means, of course, much better graphics, and clearer, easier-to-read text.

The use of a monochrome CRT is also a key to a number of other advantages offered by the display. For one thing, adding color capability to a monochrome instrument will not require repackaging the instrument to accommodate the longer color CRT. Also, due to the absence of a fragile shadow-mask or complex electron-gun, monochrome CRT's are inherently more rugged than color CRT's. Use of a monochrome CRT also eliminates the color-convergence problems that plague other types of color displays.

One potential problem with the display arises from the fact that the system is field sequential. In the system, the brightness of a given color will be reduced to a maximum of 25% of the brightness of that color on a continuously rastered CRT. That is due to two factors. One is that since the system is field-sequential, the two colors have a 50% duty cycle (since the frames alternate, each color is displayed only half of the time). The second factor is that an ideal polarizer has a transmission factor of about 50%. We are dealing with real devices here, however. Taking into account factors such as the non-ideal nature of the polarizers, the brightness level of the display is only about 12%–14% of the brightness level of a continuously rastered display.

What offsets that potential problem is a high and controllable contrast-ratio. The combination of color and linear polarizers used in the Tektronix system allows for contrast ratios that can exceed 20:1. The contrast ratio of the display can be varied by varying the intensity of the scanning beam. That high contrast ratio allows the display to be satisfactorily viewed under high ambient-light conditions, even in full sunlight.

Applications

There are, of course, a number of applications where the new Tektronix technology can provide color capability where it has not been practical before. Examples of that include small instrument displays such as oscilloscopes, logic analyzers, and spectrum analyzers. Those instruments require high-resolution displays to adequately convey waveform information. Another area where color would be useful is in system-control displays. In that application, color could be used for highlighting special situations or warnings.

In fact, the display could be used in any application where color is desired, but high-resolution is required. It would be ideal, for example, for word processing. In addition, the display's high contrast is a

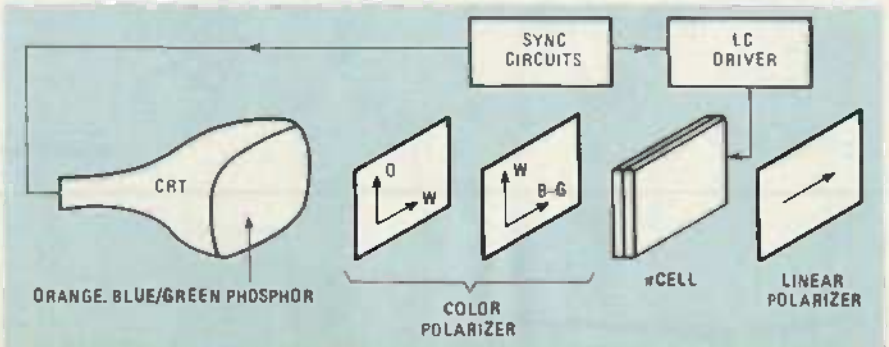

FIG. 4—BLOCK DIAGRAM OF THE liquid-crystal color shutter display system. Information is fed to the CRT in two sequential fields, which are synchronized with the switching of the color shutter.

www.americanradiohistory.com

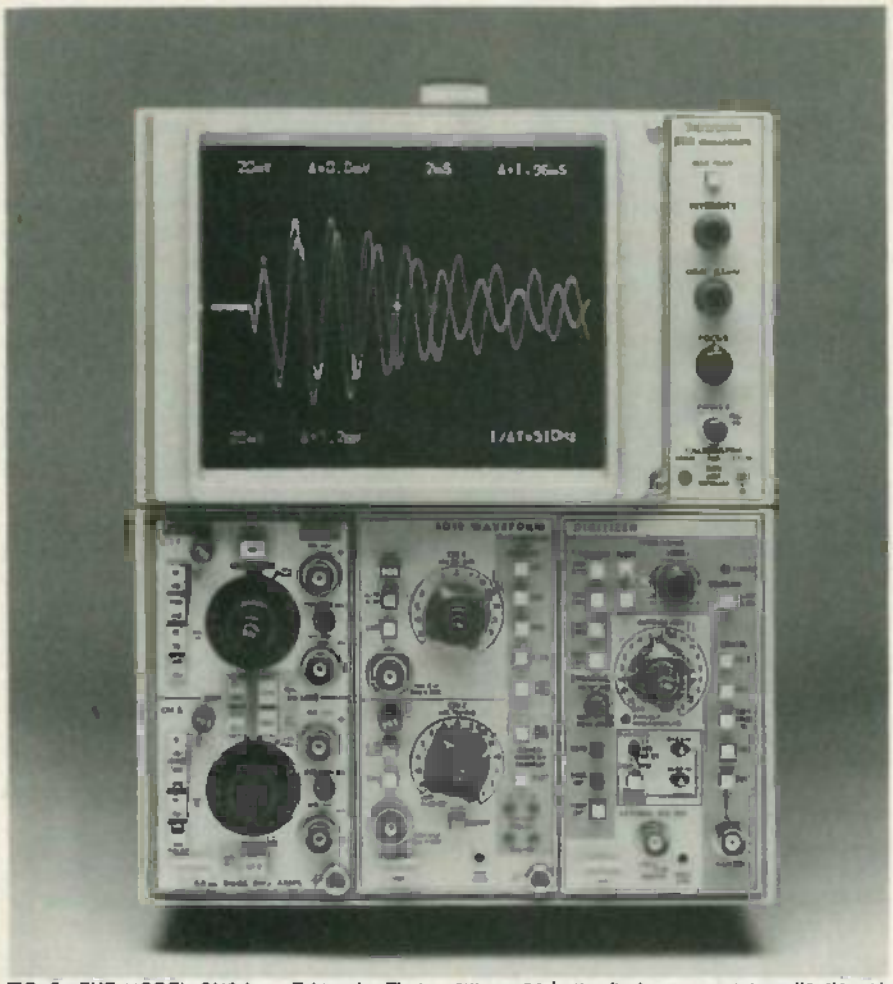

FIG. 5—THE MODEL *5116* from Tektronix. That oscilloscope is the first commercial application of Tektronix' liquid-crystal color shutter technology.

great advantage in the high ambient light of the typical office.

The *5116*

Textronix' first commercial application of the liquid-crystal color shutter was in its *5116* color-display oscilloscope. The usefulness and practicality of the color shutter is clearly illustrated by that device.

In that scope (see Fig. 5), the color traces are used to make it easy to distinguish between channels, for emphasizing certain types of important information, and in general to make the scope easier and more efficient to use.

In the past, oscilloscopes have used a variety of schemes to make them easier to use. Those schemes include highlighting, cursors, and alphanumeric readouts. The addition of color merely takes those schemes one step farther. In the *5116*, for instance, channel 1 data is displayed in blue-green while the channel 2 data is displayed in orange. Further, the alphanumeric readouts are color coded by channel, while the X-Y and time-base measurements are displayed in neutral (off-white).

The use of color allows users to overcome many of the shortcomings of traditional oscilloscopes. For instance, in the past, one problem has been how to display multiple traces while taking advantage of the full vertical resolution of the oscilloscope. When the traces are of one color, confusion often arises when those traces are overlaid. In the *5116*, the use of color eliminates that problem. The channel-1 and channel-2 traces are, of course, displayed in their designated colors; with the areas of the waveform overlap shown in neutral.

Of course, one of the key factors in the eventual success or failure of liquid-crystal color shutter technology is its cost to implement. Right now, the only indication of that cost is found in the *5116*. The basic *5116* color oscilloscope carries a suggested list price of $2335. That scope is the color version of the monochrome *5110*, which is priced at $1505. That boils down to a cost of $830 for the color shutter alone.

Note, however, that the prices quoted above are for basic models. When the *5116* is mated with the *5D10* waveform digitzer (which turns the *5116* into a color digital-storage-oscilloscope) the total cost becomes $5185. At that price level, the $830 for the color shutter does not represent quite as large a percentage of the total cost. Just as with any technology, however, it is reasonable to assume that as production picks up, costs will drop, making the color shutter an extremely attractive display option.

As time goes on then, it is reasonable to assume that the color shutter will be used in a wide variety of products and applications. In addition, it is likely that it will be used in a variety of non-Tektronix products. That's because the manufacturer has recently announced that it intends to sell the new technology to other companies for use in their products.

In summary, the liquid-crystal color shutter, with its dual properties of color and high resolution, offers instrument manufacturers an attractive alternative to other types of color displays. It is reasonable to assume that we'll be seeing them in a great number of products before too long. **R-E**

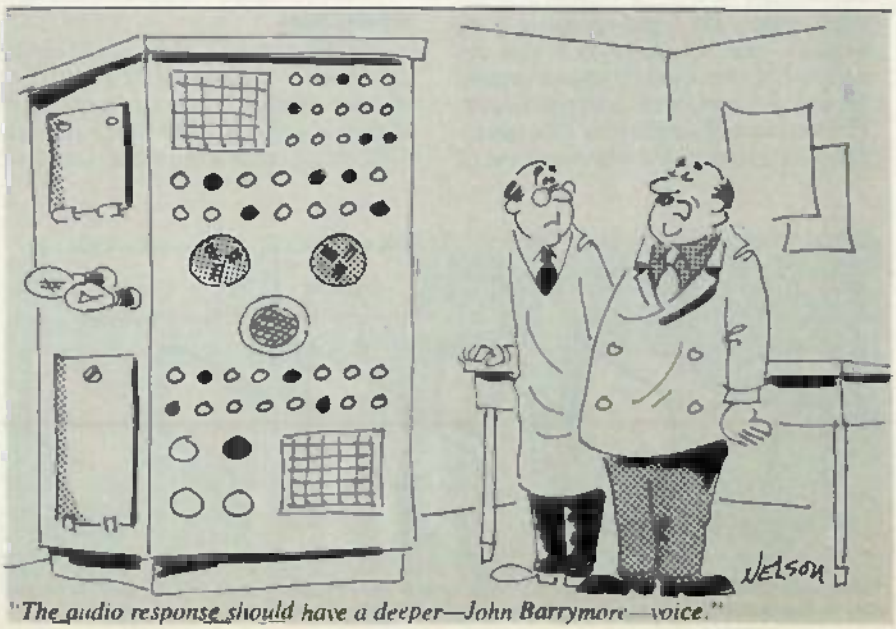

"The audio response should have a deeper—John Barrymore—voice."

www.americanradiohistory.com

WARC 84

The future of shortwave broadcasting is being decided by a pair of international conferences, the first of which was held this year. Here is a report on that first conference, including a look at what was accomplished, and, perhaps more importantly, what was not.

STANLEY LEINWOLL*

ON THE SURFACE, THE WORLD ADMINistrative *R*adio Conference for the Planning of the Shortwave (*H*igh *F*requency) *B*roadCasting Service (WARC-HFBC) was a rousing success. Held under the auspices of the *I*nternational *T*elecommunication *U*nion (ITU), the Conference was charged with the task of preparing a report containing a set of technical standards to be used in the planning of the shortwave broadcasting bands.

In addition, the Conference was directed to develop a set of principles and procedures governing the use of the shortwave broadcasting bands, and to decide upon a method of planning those bands.

The report of the first session is to be transmitted to a second session, now scheduled to be held in Geneva for seven weeks during early 1987. That second session is scheduled to carry out the actual planning.

In all, some 575 delegates from 115 countries participated in WARC-HFBC, which was held in Geneva, Switzerland, from January 10–February 11, 1984. In addition to the countries represented, there were 20 observers from various regional and international organizations, including the *I*nternational *A*mateur *R*adio *U*nion (IARU).

When one considers the diversity of interests and cultures represented at the Conference—East, West, and Third World; developed and developing countries; large users of the spectrum and

*Stanley Leinwoll is Director of Engineering for Propagation and Frequency Management, Radio Free Europe/Radio Liberty. He was a member of the United States Delegation to the WARC-HFBC, and is participating in the intersessional activities in preparation for the second session of the Conference, now scheduled for early 1987.

www.americanradiohistory.com

THE U.S. DELEGATION to the WARC-HFBC

small, and old, established broadcasters as well as newcomers—it is a miracle that anything at all was accomplished. The basic problems involved polarization between the larger users of the spectrum, those with extensive worldwide or national broadcasting commitments, and the smaller users, who were seeking assurances that their spectrum requirements would be met and guaranteed.

And indeed, during the five gruelling weeks of the Conference, it appeared on more than one occasion that the Conference would fail because of stalemates that developed over seemingly irresolvable issues. Everyone present made monumental efforts to resolve some of those conflicts, and many of the delegates worked fifteen to twenty hours a day during the second half of the Conference in an effort to achieve reasonable solutions.

Finally, however, the Conference was able to complete its report. That report is 101 pages long, and includes over 70 pages of technical standards and procedures. In contrast, the sections dealing with planning principles and procedures, and the planning method itself, are only 9 pages long. Of greater significance is the fact that some of the basic principles and procedures are vaguely worded, others are provisional, and some are confusing.

A careful reader of that report comes quickly to the conclusion that many fundamental problems remain, and that the delegates attending the second session will be required to work long hours with diligence, patience, resourcefulness, and dedication in order to bring that second session to a successful conclusion.

So, although the Conference did complete its report, the document is a caldron bubbling with unresolved issues, procedures that must be clarified, software that is yet to be developed, and principles that are still to be tested.

Between the first and second session of the WARC-HFBC, the *I*nternational *F*requency *R*egistration *B*oard (IFRB), one of the permanent organs of the ITU, has been charged with a number of vital preparatory tasks, including the development of the software necessary to test and implement the planning method adopted at the first session. That method appears to be one of the most complex planning processes ever attempted, and the tasks before the IFRB are indeed formidable.

Some of the major problems facing the IFRB, and the second session will be described shortly. But first, the good news!

Technical standards

One of the most significant accomplishments of the first session was the adoption of some 73 pages of technical standards that cover virtually every aspect of shortwave broadcasting. Those include: double-sideband system specifications; protection ratios; receiver characteristics; required transmitter power; propagation, radio noise, and solar indexes; usable field strength; antenna and transmitter characteristics; reliability; delineation of reception areas; rules dealing with the maximum number of frequencies for broadcasting the same program to the same area, and specifications for and progressive introduction of, a single-sideband (SSB) system.

As just indicated, the Conference adopted a format for the progressive introduction of single-sideband transmissions, including a set of single-sideband system specifications that will allow the number of transmitters to be increased significantly without a corresponding increase in the amount of spectrum space allocated to shortwave broadcasting. Since such a system will render most of the transmitters and receivers in operation today obsolete, the Conference decided that the progressive introduction of SSB, over a period of something like twenty years, was the most effective way of overcoming the technical and economic problems that are sure to arise. The second session of the Conference will determine the precise starting date and the duration of the transition period, but at this writing, it is a virtual certainty that the completion of the conversion will not take place in this cen-

www.americanradiohistory.com

tury, and in all probability not before the year 2010.

Planning principles

The remainder of the report dealt with the principals and procedures that are to be used in planning the shortwave bands. Those principles include:

- planning of the bands is to be based on the principle of equal rights of all countries, large or small, to equitable access to those bands for use in accordance with the decisions taken by the Conference;
- the planning of the high-frequency broadcasting service shall be based on four seasonal plans;
- the minimum broadcasting requirements submitted by the various nations shall be satisfied on an equal basis at the overall level of broadcasting reliability adopted by the Conference;
- the planning process is to be based on double-sideband transmissions with the possibility for countries so wishing to use single sideband, provided that the level of interference caused to double-sideband transmissions appearing in the plan is not increased;
- whenever possible, only one frequency shall be used to meet a given broadcast requirement,
- and, finally, the highest possible number of submitted broadcasting requirements are to be included in the plan.

Although those principles read very well, it is evident that some may be easier to satisfy then others, and that before they are finally implemented they will have to be tested against a complete set of operational requirements.

Planning method

The planning method adopted by the first session is a highly complex procedure; a block diagram of the procedure is shown in Figure 1. It comprises 11 steps that will be the subject of tests to be conducted by the IFRB during the intersessional period. Steps 3 through 8, and step 10 (indicated by the dashed box) are to be drawn up using the computer at ITU headquarters in Geneva.

That planning method represents a radical departure from the procedure now in effect. Under Article XVII of the Radio Regulations, all broadcasters submit their schedules to the IFRB six months in advance of implementation. The IFRB publishes that information in a book, called the *Tentative Schedule*. Where conflicts arise, it is up to the individual countries involved to solve them. In some instances, the IFRB offers recommendations for resolving the conflicts, but acceptance of these recommendations is not mandatory. The new procedure, in contrast, will leave many of the crucial decisions up to the IFRB.

The software to be used in the planning process has not yet been developed by the

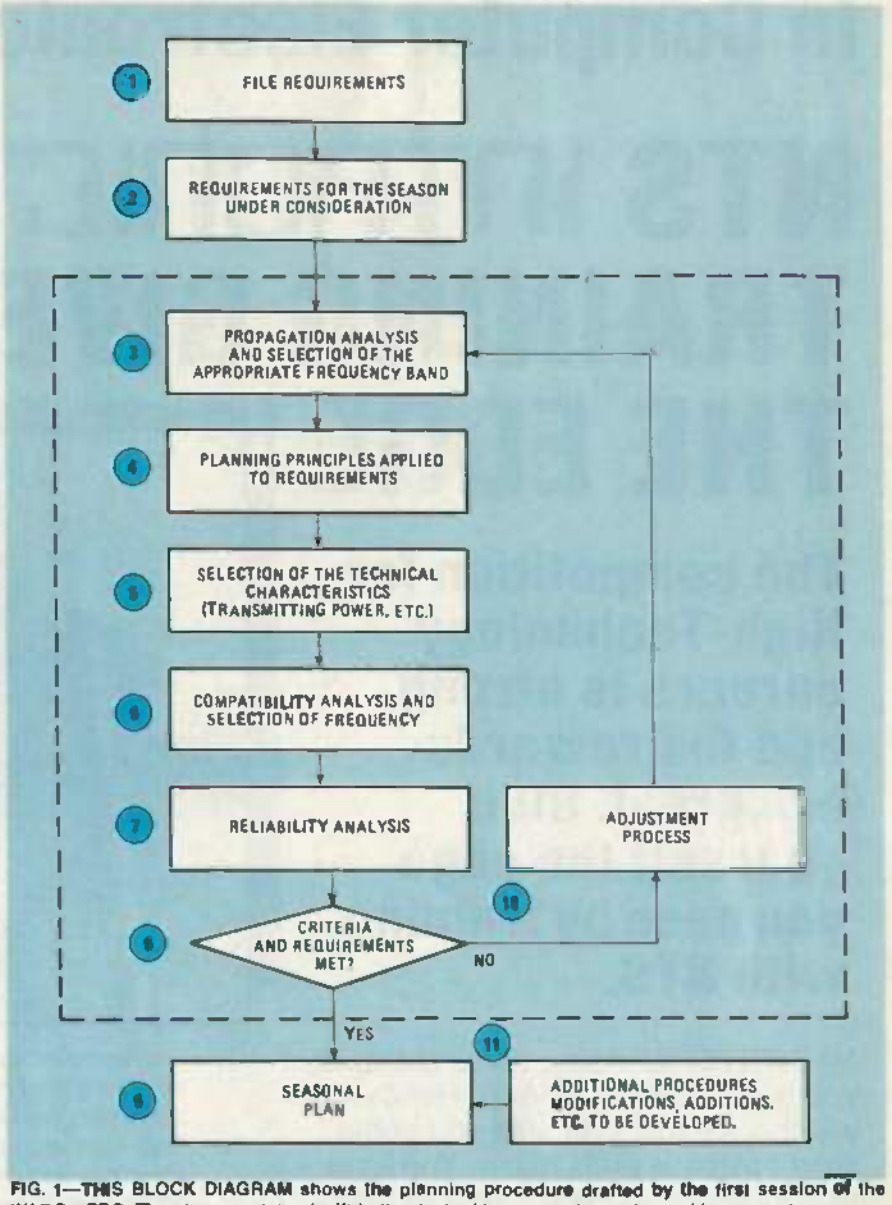

FIG. 1—THIS BLOCK DIAGRAM shows the planning procedure drafted by the first session of the WARC-HFBC. The steps contained within the dashed box are to be performed by computer.

ITU, and doing so will be an extremely complex task because of the many variables involved. Those variables include changes in season, sunspot number, time of day, hours of operation, and location of not only the transmitter for which a frequency is being sought, but all other transmitters throughout the world operating on or adjacent to the frequency being used. Other variables include type of antenna as well as transmitter power. Furthermore, the use of a computer to predict optimum frequencies involves risks. In the past, computer-generated propagation models have lacked the accuracy required to produce highly reliable schedules.

Despite those drawbacks, that procedure was supported by the Third World and developing countries because they do not have the technical expertise to choose and evaluate the best possible frequencies for their broadcast services. It was their position that by having the IFRB choose the frequency band and/or frequency, it would provide them with technical assistance they cannot provide for themselves.

Some very major questions, particularly those involving modification procedures, still remain unanswered. The prediction method chosen is based necessarily on simplified propagation models, and there is considerable doubt about the accuracy that will result. In many cases, even using the most sophisticated programs currently available, there are significant differences between the frequency band predicted to be optimum, and the one that actually turns out to be optimum. Where such differences occur, methods will have to be developed for changing bands or frequencies in order to insure the success of the services affected.

That concept shapes up as one of the most troublesome issues to be faced at the second session. The first session was

www.americanradiohistory.com

In Computer Electronics...

NTS INTRONIC™ HOME TRAINING GIVES YOU THE EDGE

The competition for High-Technology careers is strong, and the rewards are great. Give yourself the edge you need by training with NTS.

NTS INTRONIC home training provides you with a special kind of "Hands-On" experience that prepares you better, develops your skills faster. You advance as quickly as you wish, working with actual circuits, diagrams, schematics, and state-of-the-art hardware. There are a dozen different NTS programs in electronics to help you develop and reach your potential. They range from basics to advanced areas in several fields. And the ALL-NEW NTS course catalog spells it all out. It's free, and does not obligate you in any way. Send for it today.

A GROWTH INDUSTRY

High-Technology is a growth industry. The evidence is clear, and most observers predict a steady expansion due to a relatively strong flow of investment capital into computers, electronics and precision instruments. Sales of computers alone will reach an estimated ten million units this year. This means challenges and new employment opportunities, especially in servicing and maintenance. Computer servicing skills can best be learned by working directly on field-type equipment. NTS electronic hardware is selected and developed especially for the training program with which it is associated. You learn by doing, by assembling, by performing tests and experiments, covering principles of computer electronics, microprocessor trouble-shooting, and circuitry.

MICROCOMPUTERS

NTS offers three programs in computer electronics. You will receive training covering solid-state devices, digital logic circuitry, and the fundamentals of the computer itself. Instruction includes micro-control technology and detailed operation of microcomputers. These courses will prepare you for entry-level in many facets of the computer industry such as field service and customer engineering as well as programming. In addition to written texts your course includes the NTS/HEATH disc-drive computer which you assemble as part of the training process. The assembly and use of the computer will serve to reinforce practical application of principles.

www.americanradiohistory.com

MICROPROCESSOR TECHNOLOGY

The field of industrial and microorocessor technology encompasses the application of electronic microprocessor control principles. Your course takes you from fundamentals of digital electronics and associated circuitry through the application of the microprocessor as a control device. You will learn how to move and manipulate instructions and information. The microprocessor trainer included in your course is a microcomputer system designed as a practical tool for learning the use of software and hardware techniques utilized in the linking of microprocessors to various systems.

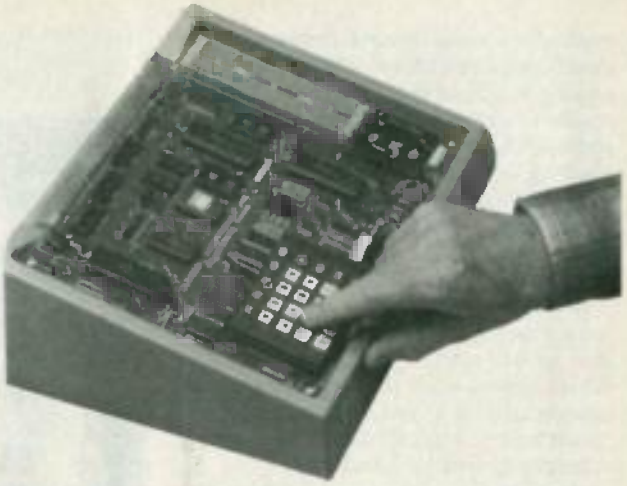

DIGITAL ELECTRONICS

The NTS Compu-Trainer is a fascinating solid-state device which you will build in order to perform over ninety logic circuit experiments. These experiments serve to emphasize an area of electronics which is essential to the understanding of state-of-the-art control equipment; they are also extremely important to those wanting to pursue a career in computer servicing. Separate courses involving the Compu-Trainer are also available in Microcomputer Servicing and Digital/Analog Electronics.

ROBOTICS & VIDEO TECHNOLOGY

Other NTS courses cover a wide range of specialization. In Robotics, the NTS/Heath Hero I is included to train you in robotic applications in manufacturing processes. In Video technology, a new course features the advanced NTS/Heath Z Chassis "Smart Set" color TV with computer space command remote control and space phone. This is an excellent program for those interested in a career in video servicing with microcomputer basics.

EARN CEU CREDITS

America's industrial giants are turning more and more frequently to home study as an effective way to upgrade employee skills. You benefit from the experience NTS has gained in its 79 years as a leader in technical training. The skills and experience gained in the building of kits and test equipment provide you with training that cannot be duplicated. And, depending on the program you select, you can earn up to 30 CEU credits for successful completion. Complete details included in the catalog.

Use the mail-in card or fill out and mail the coupon. Indicate the field of your choice. (One, only please.) FREE full color catalog will be sent to you by return mail.

NO OBLIGATION

NATIONAL TECHNICAL SCHOOLS

TECHNICAL TRADE TRAINING SINCE 1905
Resident and Home-Study Schools
4000 So. Figueroa St., Los Angeles, CA 90037

NATIONAL TECHNICAL SCHOOLS Dept 206-104
4000 South Figueroa Street, Los Angeles, CA 90037

Please send FREE color catalog on course checked below.

- ☐ Robotics
- ☐ Digital Electronics
- ☐ Auto Mechanics
- ☐ Computer Electronics
- ☐ Video Technology
- ☐ Home Appliances
- ☐ Air Conditioning/Solar Heating

Name _____ Age _____

Address _____ Apt _____

City _____ State _____

Zip _____ Phone ( ) _____

☐ Check if interested ONLY in classroom training in Los Angeles
☐ Check if interested in G.I. Bill information.

www.americanradiohistory.com

marked by some heated debates over modification procedures, but in the end, nothing was resolved. Thus, that thorny problem was left for the second session to address. Yet, it remains clear that if the planning procedure is to be successful, some method of modifying assignments must be devised to take care of instances where the predicted optimum frequency differs from the actual one.

But the issue over which the Conference nearly failed was over rules for dealing with incompatibilities. That is: What happens when the total number of requirements in a certain band, at a particular hour, to a specified reception zone, exceeds the available spectrum?

The larger broadcasters held that all requirements should be met, even if that meant accepting lower standards and less protection. It was their position that equality meant literally that all requirements would be treated equally.

The developing countries led by Iran, India, and Algeria, disagreed. They held that there was a difference between equality and equity. Their view was that if there were too many requirements to be satisfied in the existing spectrum, then all countries should be guaranteed a certain minimum number of requirements that would be satisfied at an agreed-upon level of protection. After that, those countries with large numbers of requirements would either have to reduce some of them or accept reduced protection.

With the battle lines drawn early, the issue became more and more acrimonious as the Conference progressed. At the eleventh hour a highly complex three-tier system, which satisfied no one, even those who purported to understand it, was proposed. That compromise also would have failed if it hadn't included the stipulation that during the intersessional period the IFRB would develop the software required to test the proposed method, and report the results of those tests to the second session. The success of the second session will depend, to a great extent, on the ability of the Conference to deal with, and resolve successfully, that key issue.

Perhaps the most sensitive actions to be taken at the WARC-HFBC concerned jamming. The Conference adopted a resolution relating to the avoidance of harmful interference in order to improve the use of the shortwave bands allocated to the broadcasting service. The original resolution, proposed by the Netherlands, contained very strong language, and specifically identified jamming and the extent to which it disrupts shortwave listening. The Dutch found that of 85 broadcasts from stations in the Far East, Middle East, Africa, and the Americas that were monitored, 32 were affected by jamming.

The Dutch resolution further indicated that it feared that that form of harmful interference jeopardized the orderly planning of the high-frequency broadcast bands.

SITE OF THE WARC-HFBC Conference in Geneva.

It further proposed the organization of extensive monitoring programs to identify countries causing harmful interference. The program's findings were to be reported to the second session of the Conference.

It must be emphasized that never in the history of the ITU has the subject of jamming been brought up, because that has been considered a primarily political subject, and not appropriate for discussion at a technical forum. However, the Dutch resolution pointed out, as indicated above, that such harmful interference adversely affected the rational planning of the shortwave broadcasting spectrum, and that it had to be considered.

After some frantic behind-the-scenes maneuvering among a number of countries, a resolution that was acceptable by consensus was agreed upon. That resolution eliminates any reference to the word jamming, or intentional harmful interference, although its intent is unmistakable. It further calls for monitoring efforts to be conducted through the IFRB to identify countries causing that harmful interference, and that information is to be made available at the second session of the WARC-HFBC.

The manner in which that monitoring is performed during the intersessional period, and the extent to which use is made of it, may be of vital importance in assessing the impact of harmful interference, and determining the possibility of rational planning at the second session.

A companion to the resolution on harmful interference did not fare as well. Originally submitted jointly as a planning principle by England and the Netherlands, that principle called upon the Conference to adopt a planning method that included procedures to ensure broadcast reliability for all countries.

That principle was not supported by the big three in the non-aligned/developing country bloc—Algeria, India, and Iran, and it was subsequently diluted considerably. It became a procedural item instead of a principle, and it gives very little to countries whose transmissions suffer from intentional harmful interference. The item now reads in part:

Actions relating to harmful interference

In the event of harmful interference to an HF broadcasting service which is using an assignment in accordance with a current seasonal plan, the Administration concerned shall have the right to request the prompt assistance of the IFRB in finding another frequency to help restore that service to the level of reliability achieved in the plan. Any new frequency proposed by the IFRB shall not adversely affect the seasonal plan in operation...

That procedure offers a country (Administration) whose transmissions are being jammed woefully little in the way of relief. In effect, it gives it the option of substituting one jammed frequency for another, if that does not "adversely affect the seasonal plan in operation."

The second session of the Conference will have many very difficult problems to address, not the least of which is the one dealing with harmful interference, how to cope with it, and how to take it into account in preparing a planning procedure that is to work effectively. In addition, many complex and highly controversial issues have yet to be addressed, both during the intersessional period, and at the second session of the Conference. Because of that, the second session may prove to be quite "interesting." R-E

www.americanradiohistory.com

BUYER'S GUIDE

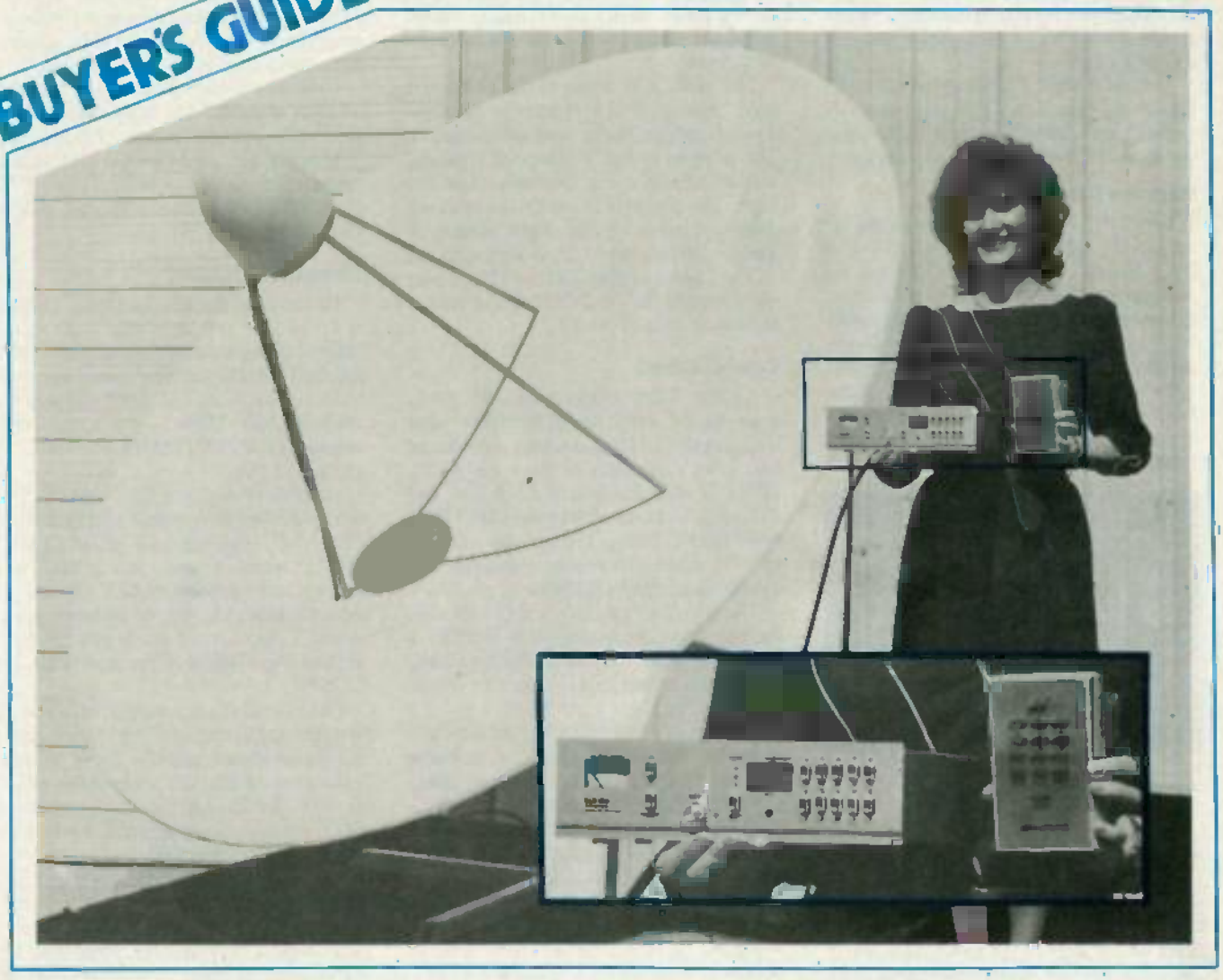

Turnkey Systems

MARC STERN

A TVRO system does not have to be bought and assembled piece-by-piece—turnkey systems offer an attractive alternative.

PUTTING TOGETHER A HOME SATELLITE-TV reception system doesn't have to be a step-by-step, component-by-component process. You *can* do it that way, of course, if you choose. But there is an alternative—the turnkey system.

Typically a turnkey satellite-TV system consists of everything you need—from the antenna to the receiver—to start watching satellite-beamed programming. Some systems also include add-ons such as stereo processors and the like.

In this article, we won't be presenting the specifications of each system in detail. That's because the specifications of many of the components that make up these turnkey systems can be found in the special "Receiving Satellite Television" section in the October issue of **Radio-Electronics**. However, we will be including some of the more important specifications as a guide.

Caveat emptor!

Before we begin our look at complete packages remember that when you buy a turnkey system, you will pay a price for the convenience. At best, you will find turnkey systems to be priced about the same as what you'd expect to pay for the individual components—but it can cost much more. (Especially because some components are discounted, while turnkey systems rarely are.) And keep in mind that the prices that you see here are only approximate. In most cases, it's the dealer—not the manufacturer—that assembles the components into a system and sets the price.

www.americanradiohistory.com

Is convenience the only advantage of a turnkey system? Not really: Buying the system from a single manufacturer gives you reasonable insurance that all the parts that make up the system are properly matched. Further, if the system ever needs servicing, you'll know who to call—even if you don't know which part is causing the problem.

If assembling a TVRO system doesn't appeal to you, don't give up—turnkey systems are certainly a good way to go. Let's now take a look at what's available.

Birdview Satellite

For $2995, Birdview offers a multiple-receiver, satellite-TV system—the *20/20M*—that allows you to have several satellite receivers tuned to separate channels simultaneously. The matched system includes a receiver, *Low-Noise Block* downconverter (LNB), *LS40* line splitter, infrared remote-control, antenna, and antenna-drive control. The system also features stereo capability and digitally synthesized tuning.

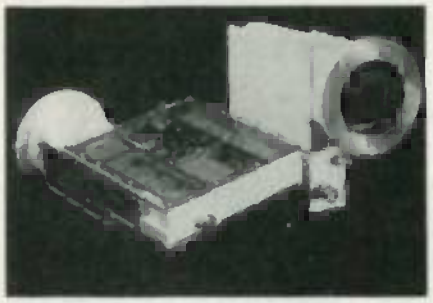

BIRDVIEW'S LNB is one of the main components in the multiple-receiver system.

The LNB and the 4-way splitter are the main components in the multiple-receiver system. Using the original Birdview design, the LNB features a 4.7-GHz oscillator with a stability of 2 ppm/°C and a noise temperature of 90° Kelvin (1.17 dB). The LNB has a nominal conversion gain of 70 dB. The unit downconverts the 24 available transponder signals as one block with a range of 500–1000 MHz.

The output of the LNB can be fed to up to four satellite receivers by using the *LS40* line splitter. Then, each receiver can be tuned to a different transponder frequency (but on the same satellite, of course).

Channel Master

Channel Master offers a variety of high-performance satellite-receiving systems. They all feature the same basic electronic components and differ in antenna size and mount (either manual ur motorized).

With an 8-foot manually adjusted dish, the *6147* system is available for $1,895 ($2395 for the motorized *6247*). The *6174*, with a 10-foot manually adjusted dish, is priced at $2495 (the motorized version, *6274*, sells for $2995). A system with an 6.8-foot dish is priced at $1695 for the manual version ($2095 for the motorized version).

Those systems include the *6128* receiver, which features 24-channel push-button tuning, automatic polarity-switching, LED channel-display, center fine-tuning meter, and signal-strength meter. A higher grade receiver is available for $300 more.

The dish is a prime-focus fiberglass type. The feedhorn combines the low-noise amplifier, scalar feed and polarizer. The antenna mount is the polar type and can withstand winds of more than 100 mph. The optional motor-driven tracking system features UP and DOWN buttons to aim the antenna and a three-digit readout.

The LNA's, either 100° or 120°, cover the standard 3.7–4.2 GHz range with a minimum gain of 50 dB.

Conifer Corp.

Conifer Corp. offers a turnkey package—the *DE-2001*, priced at $3000—that includes the *AN1200* antenna, a choice of two LNA's (the *LN-1200* or *LN-1000*), either of two feedhorns (*FD-200* and *FD-300*), a choice of receivers (*RC-2001* and *PRO RC-2001*). There is also a choice of two stereo processors available, the *SP-2001* and *PRO SP-2001*.

The *AN-1200* antenna is a 12-foot, 18-section prime-focus unit that features a gain of 42.3 dB, a 1.5-degree beamwidth, and a polar mount that will survive winds up to 100 mph.

The two scalar feedhorns, the *FD-300* and *FD-200*, each offer a maximum VSWR of 1.25:1. They are identical units, except the *FD-200* accepts two LNA's.

The *LN-1200* and *LN-1000* LNA's are mounted in rugged cast aluminum. Each offers a gain of 50 dB, and a noise-rejection minimum of 30 dB. The standard *LN-1200* has a noise figure of 1.5 dB, and a maximum noise temperature of 120° Kelvin. The *LN-1000* LNA offers an improved noise-temperature specification of 100°K maximum with a noise figure of 1.3 dB.

The downconverter supplied with the *RC-2001* and *PRO RC-2001* receivers has a noise figure of 15 dB (nominal), with an image rejection of 25 dB. The downconverter's IF output is at 70 MHz and its voltage requirements vary between 14.5- and 18-volts DC.

The *RC-2001* and *PRO RC-2001* receivers have an input IF of 70 MHz (and a required input level from −35 to −5 dBm). The frequency response of the video section is from 20 Hz to 4.2 MHz with an IF bandwidth of 27 MHz. The units offer tunable audio (5.5–8.5 MHz) and features two preset positions (6.2 and 6.8 MHz). They feature an audio-frequency response of from 50 Hz–15 kHz. The audio-output level is nominally 0 dBm.

CONIFER'S *RC-2001* RECEIVER has many features including tunable audio.

Conifer's stereo processors (models *SP-2001* and *PRO SP-2001*) offer an IF of 10.7 MHz with a selectable IF-bandwidth (150 or 500 kHz), a 5.5 to 8.0 MHz tuning range, and an input impedance of 72 ohms. Their frequency response is from 15 Hz to 15 kHz.

General Instrument

General Instrument has three turnkey systems that are available with either manual or motorized dish mounts. One, the *SATV-08IM2* features a manually-controlled 8-foot dish, 120° LNB and sells for about $2,500. There is also a motorized version (*SATV-08IM2M*) that sell for around $2,900.

Another system, the *SATV-108M2*, features a 10-foot dish with Az/El mounts, a 120° LNB, and sells for about $2,900. The system is also available in a motorized version (*SATV-108M2M*) priced around $3,500. In addition, there is also a commercial-grade system, built around the *C4R* receiver that sells for $3,500.

GI systems have a variety of standard features including the *NPS-36* manual navigator/power supply, *SPM-08* (tubular) or *SPM-10B* (ruggized) polar mounts. *EPSB* electronic polarizer or *EPSO* solid-state polarizer, *SLA* power dividers, and line amplifiers.

The navigator/power supply (*NPS-36*) features an east-west antenna control, LED antenna-position display, and a built-in delay to protect the motor when its direction is reversed. The *SPM-08* polar mount is designed for eight-foot dishes. It can be manually operated or motorized. The *SPM-10B* mount is designed for 10–12-foot antennas (manual or motorized).

The *EPSB* electronic polarizer shifts the polarization of the antenna electronically. The unit has an insertion loss of less than .06 dB; operates from an 8–15-volt supply, and has no mechanical parts. The *EPSO* solid-state electronic polarizer includes a scalar feed, and offers an insertion loss of 0.2 dB, and a VSWR of 1.35:1.

General Instrument offers systems built around the *CRSF* and *C4R* receivers. (*C4R* systems are commercially oriented.) Both receivers have the following general features: 24-channel tuning, digital tuning meter and display, and an 8-dB threshold. The receivers are also compatible with block downconversion (950–1450 MHz input). They provide DC

www.americanradiohistory.com

power for an LNB, or an LNA plus remote downconverter. Audio carriers of 6.8 and 6.2 MHz are standard.

Intersat

Intersat's complete systems range in price from $2,000 to $6,000 and include the Intersat *SR-40* receiver. Among the receiver's features are detent tuning of 24 channels, a tuning meter, fine-tuning and audio-tuning controls; plus remote switching and scanning. The *SR-40* accepts C-band signals with input levels from −25 to −72 dBm. Its image rejection is specified at 30 dB. The IF is 70 MHz with a bandwidth of 30 MHz. Polarity switching is also featured.

THE INTERSAT *IQ-160* RECEIVER is microprocessor controlled and features a real-time clock.

One Intersat system, the *IQ-160*, is microprocessor controlled, and offers a real-time clock interface and a 6-kilobyte memory for program storage. Other features of the system include an infrared remote-control transmitter; mono, matrix-stereo, and direct-stereo capabilities. In addition, it offers selectable wide- or narrow-band filtering with an output of 12-watts RMS per channel at 0.1% THD.

The television screen is used to display a menu of satellite programming, signal strength, and polarity selection. Wide/narrow audio tuning (5 to 9 MHz) is featured along with a user-selectable scan rate, and remote-actuator control.

Another system, called the *Baby Q*, features a built-in modulator for Channels 2–6, as well as composite-video and audio outputs. Other features include a single-conversion downconverter and a polarity control. An optional matching stereo decoder is available as are wired remote controls.

KLM

KLM offers six packages (referred to simply as system 1, 2, etc.), each of which includes the antenna, receiver, low-noise amplifier, control console, polarizer, and feedhorn.

System 1, priced at $2,395, includes the *X-11* antenna (manual mount), *Sky Eye V* receiver, 120° LNA; polarizer and control head, and feedhorn. *System 2*, priced at $2,495, includes the *X-11* (manual mount) antenna, *Sky Eye IV* receiver, 120° LNA, polarizer and control head, and feedhorn.

System 3 includes the *X-11* antenna with motorized mount, *Sky Eye V* receiver, a *Polar-Trak Control Console*, 120° LNA, polarizer and feedhorn. The system is priced at $2,895.

System 4 carries a manufacturer's suggested retail price of $2,995 and includes the *X-11* motorized mount, *Polar-Track Control Console*, *Sky Eye IV* receiver, 120° LNA, polarizer and feedhorn. Yet another package, *System 5*, is priced at $3,495 and includes the *X-11*, motorized mount, *Memory-Track Control Console*, *Sky Eye IV* receiver, 120-degree LNA, polarizer and feedhorn.

The final package—*System 6*, priced at $4,795—includes the *X-16* antenna, motorized mount, *Memory-Trak Control Console*, *Sky Eye IV* receiver, 120-degree LNA, polarizer and feedhorn.

The *X-11* is an 11-foot parabolic dish constructed of mesh panels; it can withstand winds up to 100 mph. The X-16 is a 16-foot, mesh dish with an increased surface area that delivers a substantial boost in gain over the *X-11*. It is built to withstand winds of 100 mph.

The *Sky Eye IV* receiver features slide-rule tuning, fully-tunable audio controls, pushbutton video-inversion, AFC defeat, and an LED bar-graph signal-strength meter. The *Sky Eye V* receiver offers single-knob transponder tuning and audio control, and features an analog signal-strength meter and pushbutton video-polarity control.

The *Polar-Trak* motor drive-control console features pushbutton east-west dish-positioning with meter, pushbutton polarity-control, and a polarity-trim knob.

THE *MEMORY TRACK CONTROL CONSOLE* from KLM features a 50-satellite memory with a digital readout.

The *Memory-Trak* remote dish-control has a programmable memory that can store up to 50-satellite positions with a 0–180° dish-position digital readout. The control console also features full east-west manual dish-control and a single-knob variable polarity-control.

Accessories include a stereo processor, line amplifier, and external polarity-trim unit.

Regency

Regency offers all the components necessary to make-up a complete TVRO system. Among those components are the $595 *SA-9000* Polaris satellite antenna, which uses a deep-dish, short focal length prime-focus parabolic design (made of .090 hard-alloy, marine-grade spun aluminum) in a relatively small antenna with a 38.5-dB gain, and a 95° LNA.

The ($549.95) *SR-3000* receiver offers

REGENCY'S *SR-1000* RECEIVER features separate video and audio tuning controls and a bar-graph LED tuning meter.

24-channel detent tuning with defeatable AFC, signal-strength and center-tune tuning meters, as well as separate audio and video fine-tuning controls. Dynamic noise-reduction circuitry helps improve audio fidelity; unmodulated audio and video outputs are available.

Also available is the $499 *SR-1000* satellite-TV receiver. The unit features separate variable controls for video and audio tuning, dual threshold-extension switches, and an LED bar-graph tuning meter. A front-mounted polarity control helps optimize reception. The *SR-1000* also provides a baseband output.

The ($495) 95° *LNA-95* low-noise amplifier offers a 47-dB gain, image rejection of 20 dB nominal, and an operating temperature of −20–65°C. It accepts input frequencies ranging from 3.7 to 4.2 GHz, has a noise figure of 15 dB, and operates from a supply ranging between 14.5 and 18 volts.

Winegard

Winegard offers a choice of several 8- and 10-foot TVRO packages that are available with either manual or motorized mounts. Each system contains an antenna, LNA, receiver, and the *Polarotor I*.

The key difference between the 8- and 10-foot packages offered by Winegard is the dish size. The 8-foot packages are priced at about $2450 for the manual *SC5001* version and $2,995 for the motorized *SC-5001S*.

The 10-foot packages are priced at $3,081 for the manual version (*SC-5020*) and $3,624 (*SC5020S*) for the motorized version. The system contains the *SC-1018* antenna, which provides a gain of 39.5 dB and can withstand winds of up to 125 mph. Each package (both 8 and 10 foot versions) contains the same basic components, receiver, LNA, etc.

The manually operated systems use the *SC-7035* receiver, which features a digital channel-readout, fine-tuning control, variable audio-tuning, and automatic polarity-switching.

The *SC-7035S* receiver (used with motorized mounts) is almost identical to the *SC-7035*, except it provides the added feature of a built-in satellite-selector control circuit for use with the *SC-7705S* actuator.

The *SC810I* 120° LNA is a 3.7–4.2 GHz GaAs FET amplifier with a minimum gain of 50 dB. The downconverter is a single-conversion unit. R-E

www.americanradiohistory.com

BUILD THIS

Tele-Toll Timer

GARY McCLELLEN

Saving a buck on your phone bill is not an easy job—especially with rates constantly going up. But this automatic call-timer can help you get a grip on your skyrocketing bills.

IF YOU'RE INTERESTED IN SAVING MONEY on your phone bills (And who isn't?), you don't have to stop making phone calls—but making shorter ones would help (especially if you make lots of toll calls). The simple timing device that we'll describe in this article can help you start saving money right away: It will tell you just how much time you spend on the phone—and it will, we hope, remind you to shorten your calls.

Since the timer will monitor all calls made on a line—even on an extension phone—it's easy to keep tabs on the calls made by your high-school kids as well as your own calls! But don't think that the timer is limited to use around the home; it can also be very useful in the business world—especially for those who use a WATS line (800 numbers).

Inefficient use of a WATS line can cost a business an awful lot of money. And without some type of timer, improving phone-use habits is a hit-or-miss proposition. But with this timer, you can determine how long an employee stays on the phone. Then his or her telephone procedure can be "fine-tuned" for greater efficiency.

Ease-of-use is one of the timer's greatest features. For starters, there are no controls. Any time the phone is picked up, the display lights and the count begins. And when you've hung up, the elapsed time is automatically frozen on the display, so that you know how long you've been on the phone. After about 20 seconds, the project then resets itself and blanks (turns off) the display. Now that is true hands-off operation!

Not only is the device simple to use—it is easy to build, too. All parts are mounted on two printed-circuit boards, so construction time is reduced to a few hours (once you have the boards, of course). All the parts are easily available, so not only will you have little trouble in obtaining the parts, you'll also have the opportunity to shop for the best prices.

Before we go any further, we should mention a few words about the FCC and your friendly telephone company. The timer, if assembled properly, should meet the FCC's requirements (namely Parts 15 and 68). However, local phone companies may have their own restrictions. Therefore, we suggest that you contact them for their requirements before you begin building this project.

Circuit operation

As shown in the block diagram in Fig. 1, the timer consists of an input-conditioning circuit, a comparator, a 20-second timer, and an inverter. In addition, there are three divide-by-60 counters (IC5–IC7), three BCD (*B*inary *C*oded *D*ecimal) decoder/drivers, three seven-segment displays, and, of course, a power supply.

The conditioning circuit, which is connected to the telephone line, isolates the device from the line and protects the unit from line transients. When the phone is in its cradle, 48 volts appears across the line. Picking up the handset reduces that value to about 9 volts. The conditioning circuit reduces the telephone's line voltage to about 2.1 volts when the phone is hung up and 0.4 volt when it's off the hook.

The output of the conditioning circuit is fed to comparator IC1-a, which compares that output to a 1.4-volt reference. When the handset is picked up, the input immediately drops below the reference and triggers the comparator. That activates the rest of the circuit.

The comparator output drives inverters that, in turn, are used to blank the displays and reset the counters. Three counters, IC5–IC7, generate the timing function: A 60-Hz signal is fed to IC5 and is divided down to 1 Hz for use by IC6 and IC7, which count the 1-Hz pulses. The count is divided internally and then output in BCD (*B*inary *C*oded *D*ecimal) form. That BCD output is sent to three BCD-to-seven-segment display drivers, IC2–IC4, which drive the displays. DISP1–DISP3. (Note

www.americanradiohistory.com

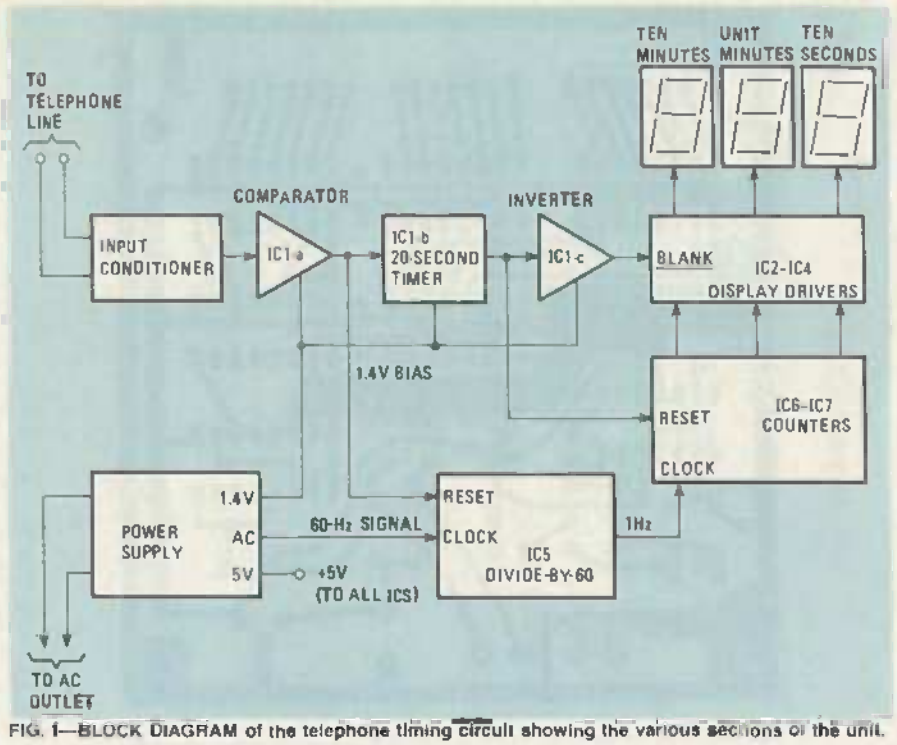

FIG. 1—BLOCK DIAGRAM of the telephone timing circuit showing the various sections of the unit.

that the unit displays tens of minutes, minutes, and tens of seconds. It does not display seconds—that amount of precision is not needed.

When the phone is hung up, the output of IC1-a goes high. That resets IC5 and freezes the elapsed time on the display for 20 seconds. (After the 20 seconds, the timer is reset automatically.) Now, refer to the schematic in Fig. 2 for a more detailed look at the circuit's operation.

In Fig. 2, we see that the input-conditioning circuit consists of diodes D1–D4, capacitors C1–C3, and resistors R1–R3. Diodes D1–D4 form a full-wave bridge rectifier, whose output is filtered by capacitors C1–C3. That's done to prevent damage to the circuit caused by transients (such as those that might be generated by a nearby storm). Resistors R1–R3 provide a high input-impedance to the circuit.

The comparator, 20-second timer, and inverter functions are handled by an LM339 quad-comparator. A voltage-divider circuit in the supply provides the reference voltage for IC1-a. When the phone is picked up, the output of the conditioning circuit drops below the reference voltage and triggers IC1-a, causing its output to go low, and capacitor C4 to begin charging through diode D5. That causes IC1-b's output to go low, removing the reset from counters IC6 and IC7, and causing the display to light and the timers to begin counting.

When the phone is hung up, the output of IC1-a goes high. That resets IC5 and freezes the time displayed. Capacitor C4 now begins to discharge through resistor R5. When C4 has discharged sufficiently (after about 20 seconds), IC1-b is again

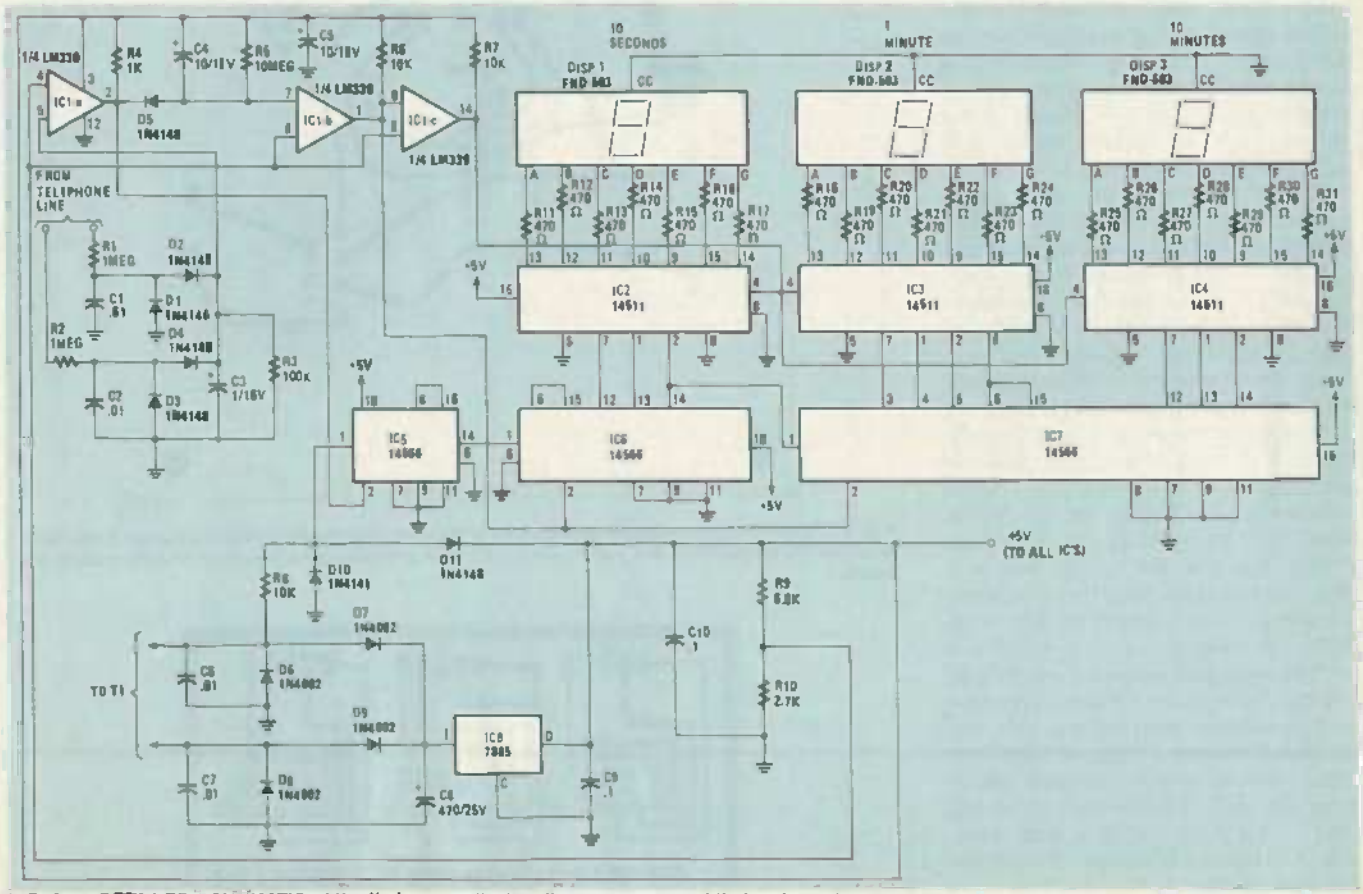

FIG. 2—A DETAILED SCHEMATIC of the timing circuit with all components and their values shown. Note that the comparator, 20-second timer, and inverter functions are handled by an LM339 quad-comparator IC1.

www.americanradiohistory.com

triggered. Its high output resets the counters. Its output is also inverted by IC1-c and fed to the pin 4 terminals of IC2–IC4 to blank the display.

Diodes D10, D11, and resistor R8 condition the 60-Hz output from the power supply by clipping the peaks off the output waveform to produce the squarewave signal. That signal is applied to the CLOCK input of IC5, divided down to 1 Hz and fed to IC6 and IC7.

The BCD outputs of IC6 and IC7 are fed to three decoder/drivers, IC2–IC4. Resistors R11–R31 (at the output of the display drivers) limit the display current to about 10 mA per segment.

The power supply consists of a 9-volt AC wall transformer and diodes D6–D9, (which are configured as a full-wave bridge rectifier). The rectifier output is filtered by C8 and regulated to 5 volts by IC8, a standard LM7805 three-terminal regulator.

The reference voltage that sets the trip point for comparator IC1-a is obtained by dividing the output of the regulator with R9 and R10. The 60-Hz squarewave signal for the timing circuitry is also derived from the power supply.

Now that we have a good idea about how the timer works, it's time to put it together!

Construction

The first step in construction is to obtain the printed-circuit boards. While you can assemble the circuit on perforated construction-board (parts layout is not especially critical), using PC boards speeds up construction, reduces errors, and makes troubleshooting much easier.

The foil patterns for the main circuit board are shown in Figs. 3 and 4. Note that the main board is double-sided and uses plated-through holes. If you make your own boards from the foil patterns shown, it will be necessary to solder all parts directly to the PC board. That's because several parts must be soldered on both sides of the board. (You cannot use IC sockets unless you use the wire-wrap type and lift them up enough so that you can solder on the component side.) Figure 5 shows the foil pattern for the display board. Here, a single-sided board is used.

Once you have the boards, then it is time to get the parts. Note that reasonable substitutions can be made for almost all parts. The capacitors are a good case in point because their values are not critical. The value of capacitor C4 determines how long the display stays lighted after you hang up. If desired, simply use smaller or larger values to shorten or lengthen the ON time. We used tantalum units in several places simply because they were available, but standard aluminum electrolytics should work fine.

As for the resistors, all are quarter-watt units, except for R1 and R2. The reason

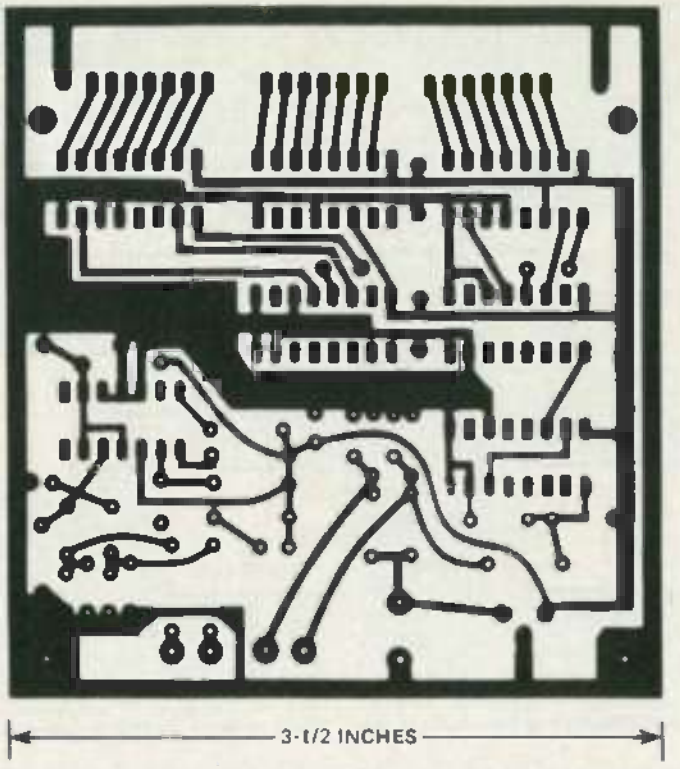

FIG. 3—THE FOIL PATTERN for the underside of main circuit board is shown here full-scale.

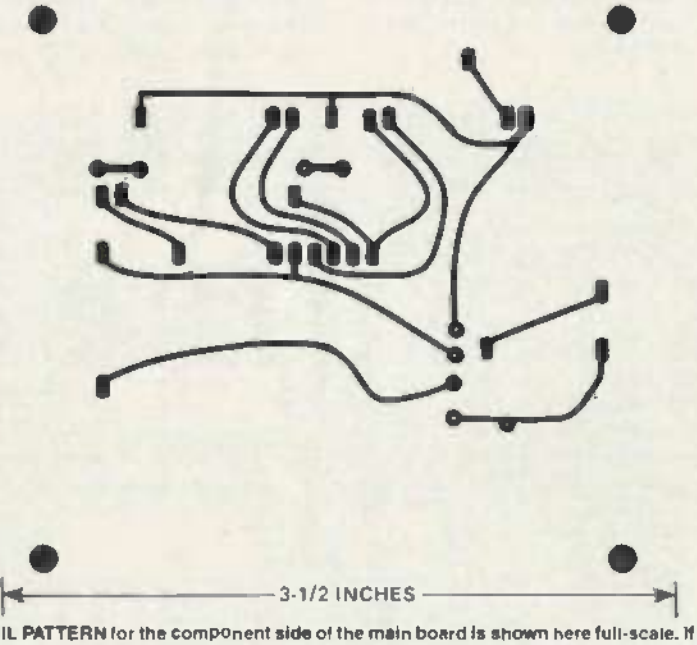

FIG. 4—FOIL PATTERN for the component side of the main board is shown here full-scale. If you make your own PC boards from the pattern shown, be sure to solder all components to both sides of the board.

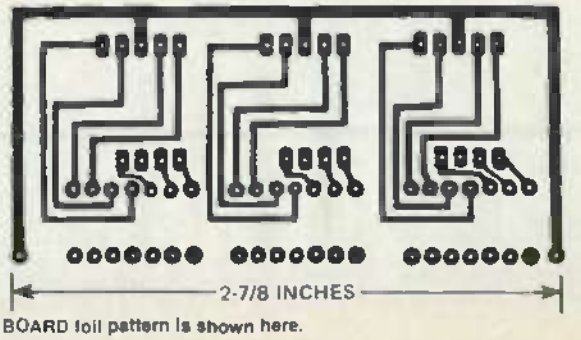

FIG. 5—DISPLAY BOARD foil pattern is shown here.

www.americanradiohistory.com

PARTS LIST

All resistors ¼-watt, 5% unless otherwise noted.
R1, R2—1 megohm, ½-watt
R3—100,000 ohms
R4—1000 ohms
R5—10 megohms
R6–R8—10,000 ohms
R9—6800 ohms
R10—2700 ohms
R11–R31—470 ohms

Capacitors
C1, C2, C6, C7—0.01 µF, 50 volts, ceramic disc or polyester
C3—1 µF, 16 volts, radial-lead tantalum
C4, C5—10 µF, 16 volts, radial-lead tantalum
C8—470 µF, 25 volts, radial-lead electrolytic
C9, C10—0.1 µF, 16 volts, ceramic disc

Semiconductors
IC1—LM339N linear quad comparator
IC2–IC4—MC14511, BCD to seven-segment latch/decoder/driver
IC5–IC7—MC14566BCP, timebase generator
IC8—LM7805CT, 5 volt, 1 amp regulator
D1–D5, D10, D11—1N4148
D6–D9—1N4002
DISP1–DISP3—FND-503 (Fairchild), 0.5-inch, common cathode, seven-segment display

Other Components
F1—0.25-amp, 3AG fuse
T1—9 volt, 250 mA (or greater) wall-mount transformer (Jameco AC-9004 or equivalent)
Miscellaneous—Circuit boards, cabinet, IC sockets, modular telephone cable, fuse holder, 4 × 1-inch piece of red display filter (see text), mounting hardware, etc.

The following is available from Mendakota Products LTD., P.O. Box 20HC, 1920 W. Commonwealth Ave., Fullerton, CA 92633: Set of the two etched, predrilled printed-circuit boards, part No. TTT-1, 15.00 postage paid. California residents add 6% sales tax. Allow 6–8 weeks for delivery.

half-watt units are used here is to avoid resistor breakdown and telephone-line problems. Quarter-watt resistors are rated at 100 volts; that value is likely to be exceeded when the phone rings.

There are many possible substitutions for transformer T1. If you can't find a 9-volt AC unit with a current rating of 250 mA or greater, try a surplus outlet. Many calculator-type battery chargers contain 9-volt transformers. To use that type, you'll have to pry open the case and remove the rectifier and filter capacitor. Just be sure not to use a 9-volt DC charger, because the timer won't count if you do! (Remember that the 60-Hz signal from the power supply is used as the clock input.)

The red-plastic display filter used on the front panel (to improve contrast) is available from many sources. A quick look through the ads in the back of the magazine should prove that to you. You can also try to get the filter material from a surplus outlet, or you might want to use red cut-and-peel drafting film over a piece of clear plastic (try a drafting-supply house for the film). Just remember that you need only a 4 × 1-inch piece.

The display board

Once you have the parts, you can start putting the timer together. We'll start with the display board: Refer to Fig. 6 and the parts-placement diagram in Fig. 7. First, pick up one seven-segment display and turn it over so that the pins are facing you; make sure that the ribbed side is on the top as shown. Cut the decimal-point lead off each display; that's the one at the lower left corner of the module with the pins facing you. Now insert the units and solder them in place as shown in the parts-placement diagram.

Next install twenty-one 470-ohm resistors (R11–R31) below the displays (again refer to Figs. 6 and 7) and bend the lower leads straight down before soldering. After soldering, clip off *only the upper leads. Allow the bottom leads to remain*—the resistor leads are used to make the connections to the main board. Now install two pieces of leftover component lead in the holes at each corner of the display board and bend them down to match the resistor leads. (See Fig. 6.) That completes the display board. Set it aside for now.

The main board

As we discuss the main-board assembly, refer to the parts-placement diagram in Fig. 8. Start by installing the IC sockets, making sure that pin 1 is correctly oriented. (Note that all sockets are installed so that their pin-1 notches point in the same direction.) Install a 14-pin socket at IC1 first. Then install six 16-pin sockets at IC2–IC7. Check your work for shorts and solder bridges; make any necessary corrections before continuing. *Do not* install the IC's at this point.

Now we'll install the diodes. Be careful not to get the 1N4148 and 1N4002 types mixed up. Also be sure to install them with the banded-ends (cathodes) positioned as shown. First go to the IC5 socket and install two 1N4148 diodes (D11 and

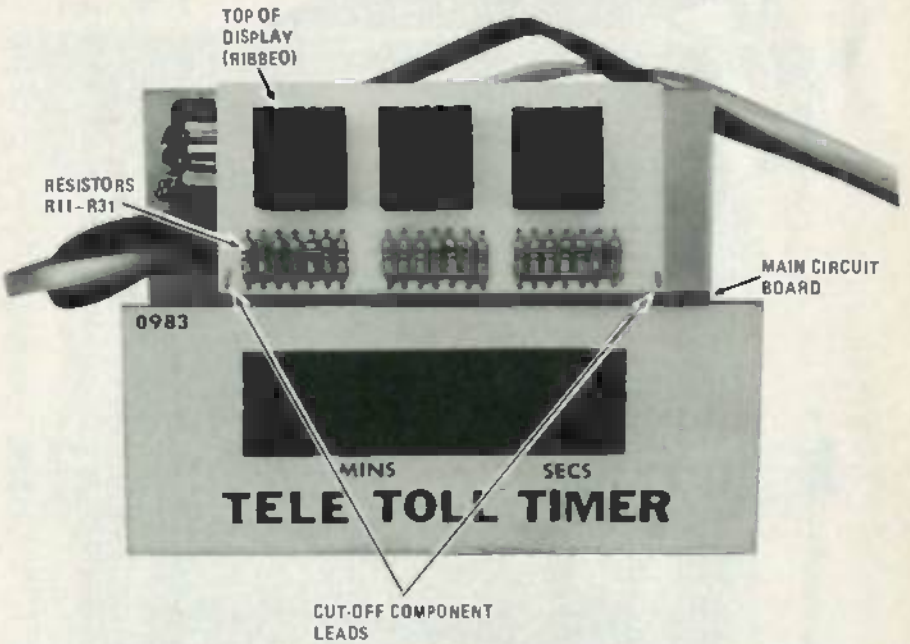

FIG. 6—THE DISPLAY BOARD installed in the main board. Note: The ribbed surface marks the top of the seven-segment displays. Resistor leads are use to make connection between the main and display boards. The leads are also used for mounting support.

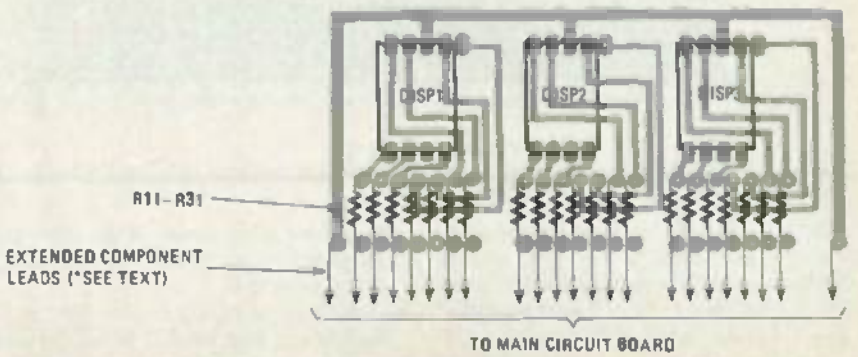

FIG. 7—THE PARTS-PLACEMENT DIAGRAM for the display board is shown here.

www.americanradiohistory.com

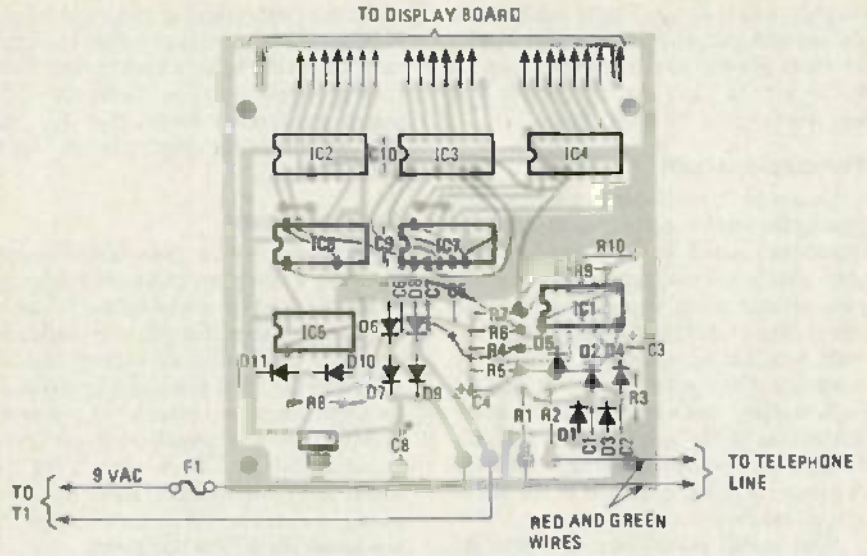

FIG. 8—THE MAIN BOARD's parts-placement diagram. Note that all pin-1 notches of the IC's face in the same direction.

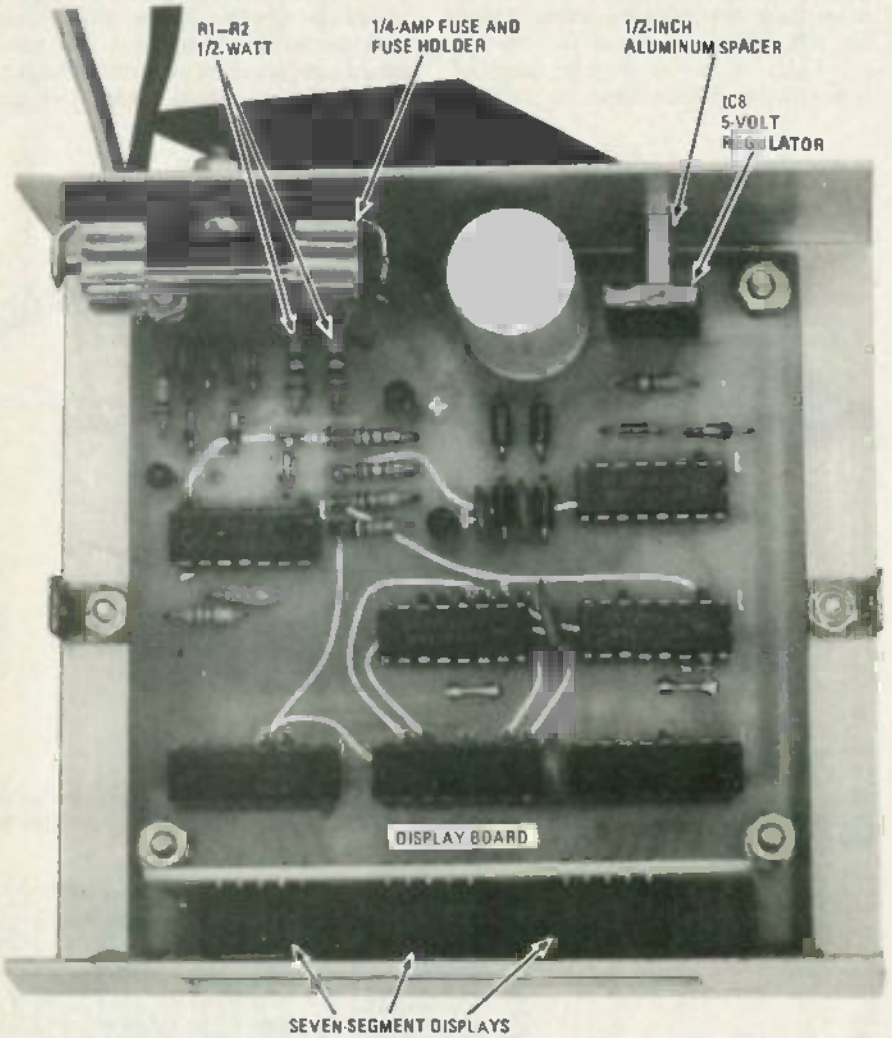

FIG. 9—A TOP VIEW OF the completely assembled circuit is shown here. Note that IC8 and the fuse holder are secured to the rear panel of the cabinet.

D10) just below the socket. Then move to the right and install four 1N4002 units at D6 through D9. Continue with the diodes by moving over to the IC1 socket. Install five 1N4148 diodes at D1 through D5. When done, check your work carefully to make sure all diodes are in the right places and properly oriented. Now, let's move on to the capacitors.

Start by installing a 0.1-F disc at C10 located between the IC2 and IC3 sockets and another at C9, directly below as shown. Next install a 470-µF electrolytic capacitor at C8 (at the bottom of the board). Be sure to double-check the polarity of that capacitor. After that, install two 0.01-µF units at C6 and C7 to the right of the IC5 socket.

Continue by installing a 10-µF tantalum unit at C5, again double-checking that the positive lead is correctly oriented. Likewise, install another 10-µF tantalum at C4. Moving to the right, install 0.01-µF capacitors at C1 and C2 (between the diodes). Then finish up the capacitors by installing a 1-µF tantalum unit at C3. Next we'll install the resistors.

Start by installing a 10,000-ohm unit at R8 (below the IC5 socket). Then move over to the socket for IC1 and install a couple of 10,000-ohm units at R6 and R7. After that, install a 1000-ohm resistor at R4. Finish the row by installing a 10-megohm unit at R5. Next install a 2700-ohm unit at R10 and a 6800-ohm resistor at R9. Move to the right edge of the board and install a 100,000-ohm resistor at R3. Then finish up the resistors by installing two 1-megohm, ½-watt units at R1 and R2.

Next install the LM7805 voltage regulator at IC8. Note that the IC is soldered directly to the board. Be sure to position it so that the metal tab is facing toward you (or to the nearest edge of the board).

With that done, it's time to double-check your work. Once you are sure that you have no solder bridges or other errors, you can install the assembled display board.

Installing the display board takes a little patience. Make sure that all the resistor leads on the display board are bent straight down and then slide them through the holes on the main board. When the two boards touch, solder in place and trim all leads.

Install the IC's next. Be sure to install them in the right places with pin 1 oriented as shown. Install three MC14511 BCD decoder/drivers at IC2, IC3, and IC4. Then install three MC14566 counters at IC5–IC7. Lastly, install an LM339 quad-comparator at IC1. That completes the main-board assembly.

Prepare the cabinet by making a 2½ by ¾ inch cutout for the display, and drilling a ⅜ inch hole at the rear of the case to feed the line and telephone cords through. It's a good idea to use a strain relief (or grommet) to prevent stripping the wires accidentally. If you use a grommet, you can secure the cords to the case with a small cable-clamp. That will prevent the wires from pulling free of the board. Drill screw holes at the rear of the case for mounting hardware (see Fig. 9.) The size of those holes depend on your mounting hardware.

Next mount the display filter in place. (We taped the edges first and then ran a bead of silicone sealer around the exposed

continued on page 87

www.americanradiohistory.com

BUILD THIS

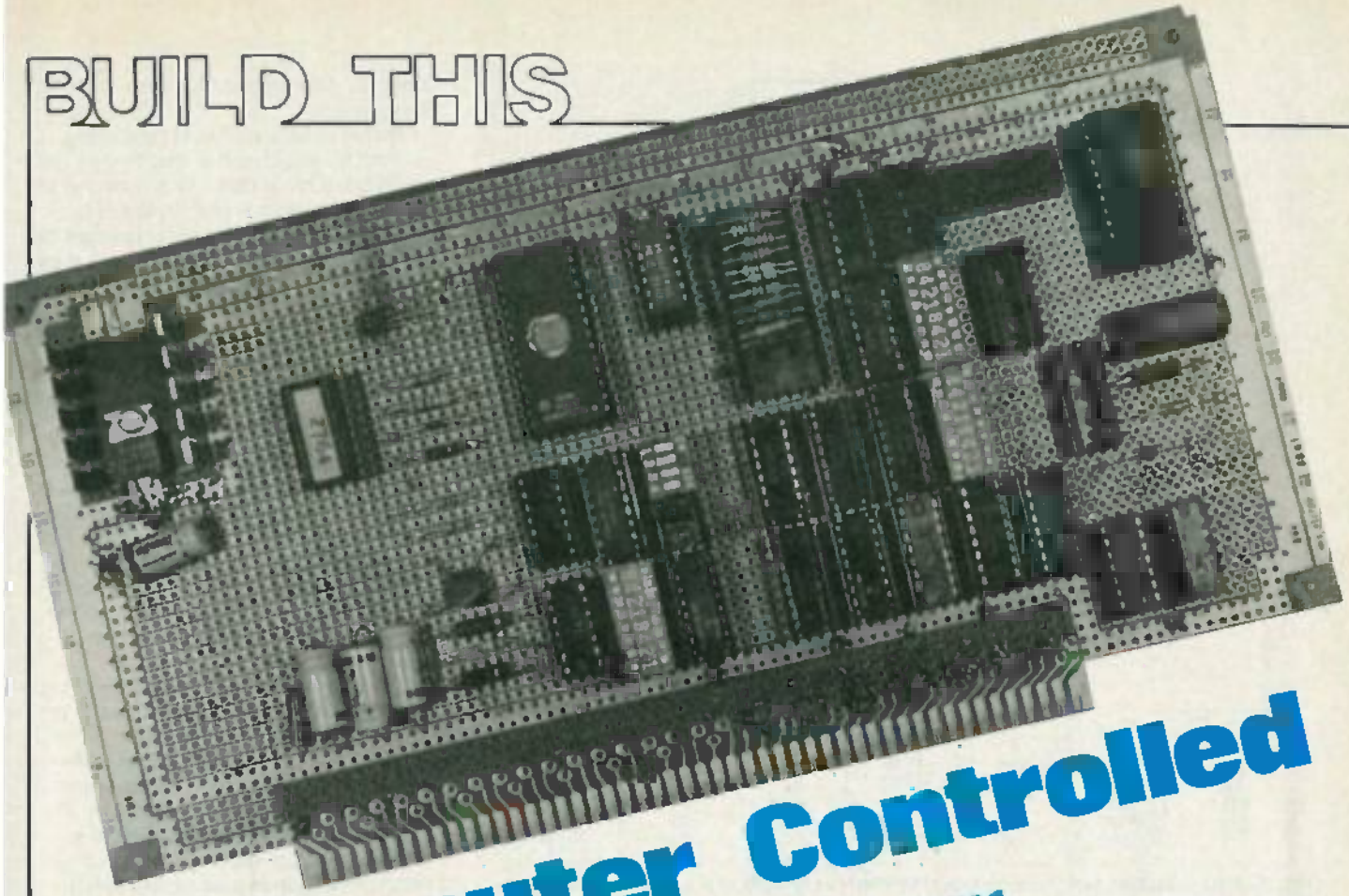

Computer Controlled IC Tester

FLOYD L. OATS

We've already seen that the IC tester we've been building can be used for more than just testing digital IC's. This month we'll add an EPROM programmer.

Part 3 IN THE FIRST TWO parts of this article, we looked at a circuit that could be used—along with your computer—to test digital IC's. We then added a low-budget logic analyzer to the tester: It worked by allowing you to view 16 digital signals on a single-trace oscilloscope. This month, we'll expand the circuit even further by adding EPROM-programming capability.

Before we go on, we should add some cautions: The circuit was designed to be used with an S-100 bus computer. With modifications, it can be used with essentially any computer. In either case, some programming experience is essential: While the software that is required is described, the actual, complete programs are not presented.

EPROM programmer

The digital IC tester—along with your computer—can be used to program and verify virtually any 24-pin member of the 2700 EPROM family. That includes everything from the original 2704/2708 through and including the 2732. Although the circuit can be modified to program 28-pin devices such as the 2764, we will not cover that here.

Figure 10 shows the pinouts for some of the various styles of 24-pin EPROM's. You'll want to refer to it as we talk about the different types of EPROM's available. We should add one more caution, though: Before you try to program any EPROM, make sure you have the manufacturer's data sheets. Pinouts, voltage requirements, and programming sequences can vary from one manufacturer to another, and from older devices to newer ones. Double checking is the safest and surest way to avoid problems.

Before we can discuss the EPROM programmer circuit, we have to know what we want it to do. So let's first consider how the 2708—a typical three-supply EPROM—is programmed. (Note that when we say "three-supply" or "single-supply," we are referring to the number of power supplies required for READ operation—we do not include the programming-voltage supply.)

To program the 2708, its $\overline{CS}/WE$ pin is brought to +12 volts and is held at that voltage throughout the programming operation. (That causes the eight data lines to become input-data lines). An EPROM address, and the data to be stored in that address, are then presented to the EPROM. Both the address and data lines must be held in their valid state while a program pulse is applied to the program pin.

That +25-volt program pulse has a pulse width between 100 microseconds and 1 millisecond. After the pulse is terminated, the next (sequential) address, along with the contents to be stored there, are sent to the EPROM and another program pulse is issued. After all addresses have been pulsed, we say we have com-

www.americanradiohistory.com

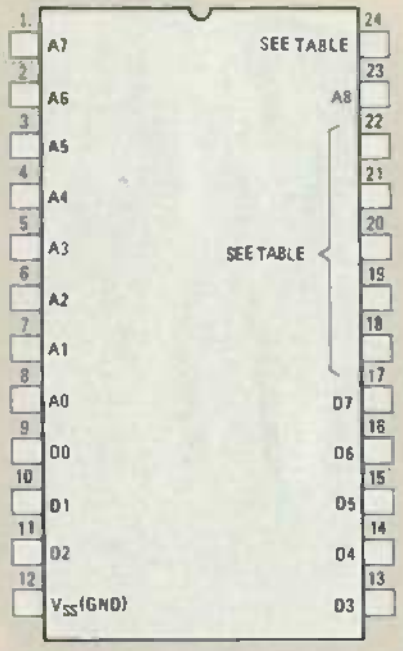

TYPE / PIN	18	19	20	21	22	24
2704	PROGRAM	V_{DD}	$\overline{CS}$/WE	V_{BB}	V_{SS}	V_{CC}
2708	PROGRAM	V_{DD}	CS/WE	V_{BB}	A9	V_{CC}
2758	$\overline{CE}$/(PGM)	A_R	$\overline{OE}$	V_{PP}	A9	V_{CC}
2716	$\overline{CE}$/(PGM)	A10	$\overline{OE}$	V_{PP}	A9	V_{CC}
2732	$\overline{CE}$/(PGM)	A10	$\overline{OE}/V_{PP}$	A11	A9	V_{CC}

FIG. 10—PIN FUNCTIONS VARY from one type of EPROM to another. While you can use this as a guide, make sure you have the manufacturer's data sheet for any EPROM you want to program.

pleted a single *pass*.

It is necessary to make enough passes to bring the total program-pulse time to at least 100 milliseconds per address. That means that if your pulse width is, say, 500 microseconds, then at least two hundred passes must be made.

The 2708 is only one kind of EPROM—a three-supply type. Now we'll look at the programming procedure for a typical single-supply EPROM: the 2716.

To enter the 2716's programming mode, pin 20, the output-enable pin ($\overline{OE}$, pin 18) is brought to +5 volts, and the programming-voltage pin (V_{PP}, pin 21) is brought to +25 volts. The address and corresponding data are presented to the IC and held valid while a fifty-millisecond high-level TTL pulse is sent to the $\overline{CE}$/PGM pin. (Note that, as opposed to the 2708, we program with a TTL-level pulse—the programming voltage applied to pin 21 remains constant at 25 volts. We should note, however, that the programming voltage *can* be switched, if desired.)

Only a single pulse is required to completely program a location. Unlike the 2708, sequential addressing is not necessary and only the addresses being written need be pulsed. Therefore, since all of the address locations in new (or erased) EPROM's are set to 1, to program a 2716, only the addresses that need to be changed to zero bits are "burned in." Those addresses that need to be set to one are programmed by simply passing over the location.

The EPROM-programmer circuit

Because the EPROM programmer (whose schematic is shown in Fig. 11) is being built as an add-on to the digital IC tester, we have to map up to four kilobytes of EPROM address into 256 memory-mapped locations. (You will recall that the IC tester uses eight address lines to carry stimulus information and thus occupies 256 memory locations.)

We overcome that problem by using a D-type flip-flop (IC15) to store the most-significant bits of the EPROM address, and by implementing a three-phase program/verify cycle (which we'll describe in more detail shortly). When we combine IC15 with the sixteen stimulus latches (IC1–IC4), we obtain thirteen address lines and eight data lines. That's enough to accommodate up to 8K of EPROM space.

The three-phase cycle is shown in Fig. 12. In the first phase, enabled by A5 being high, the EPROM upper address (A8–A12) is loaded into IC15. In the second phase, the eight least-significant address bits (A0–A7) along with eight data bits (D0–D8) are loaded into the stimulus latches (IC1–IC4, Fig. 2)) and a "burn" interval is initiated. In the third phase, the burn interval is terminated and the programmer is restored to its idle state (which is defined as both of the flip-flops in IC16 being reset).

Referring back to Fig. 11 (and to Fig. 3 in Part 1), you'll notice that five of the upper stimulus latches (A0–A4) are fed to IC15. The A5 latch is sent to pin 1 of IC17. The STIMULUS LOAD signal is inverted to an active-low pulse by IC17-f and then applied to both flip-flops of IC16 as a clock.

Assume the programmer to be in the idle state, awaiting a phase-one load. If A5 is high ($\overline{A3}$ low), pin 2 of IC16 is conditioned to set one of its flip-flops on the trailing edge of the stimulus-load pulse. (We'll call that flip-flop, IC16-a, the LOAD flip-flop.) When the LOAD flip-flop sets, it will clock pin nine of IC15, thereby capturing the EPROM upper address. The LOAD flip-flop primes the second flip-flop of IC16 to set and, through IC17-b, conditions its own reset. (We'll call the second flip-flop, IC16-b, the TTLP flip-flop for *TTL Pulse*.)

The second phase starts with the next stimulus load pulse, which will now reset the LOAD flip-flop and set the second (TTLP) flip-flop to initiate the burn interval (see Fig. 12). TTLP activates the program/verify controls and also maintains a low into the LOAD flip-flop through IC17-e.

The LOAD flip-flop being reset causes the TTLP flip-flop to reset on the next stimulus load (phase three). The burn interval is terminated and the programmer is returned to its idle state. We should note that IC15 still retains the bits captured during phase one.

During a program cycle, the TTLP flip-flop supplies a TTL pulse for programming those EPROM's that require only a TTL-level pulse. The signal also controls the high-voltage pulse needed by many EPROM's. For example, the TTLP signal controls the base of Q1 through IC17-c and IC17-d. Transistor Q1 controls V_{PP}, the programming voltage. When Q1 is turned on, it will drop about two volts and pass the remaining 26 volts to the EPROM. When pin 6 of IC3 is low, diode D3 returns the program pin to ground. Capacitor C4 limits the overshoot on the emitter of Q1 to acceptable levels.

Switch S24 is useful in testing and troubleshooting Q1 and associated circuitry—when closed, it will hold V_{PP} high without regard to the state of TTLP.

Closing switch S25 will unconditionally hold the programmer in the idle state thereby disabling the entire circuit. A quick-arming power-on reset function is provided by C1, R15, and R16.

Personality module

As shown in Fig. 11, the signals and voltages developed are sent to the EPROM socket (SO5) through a switching and distribution network (S18–S24, and S04). Socket SO4, the *personality module* socket, accepts a personality

www.americanradiohistory.com

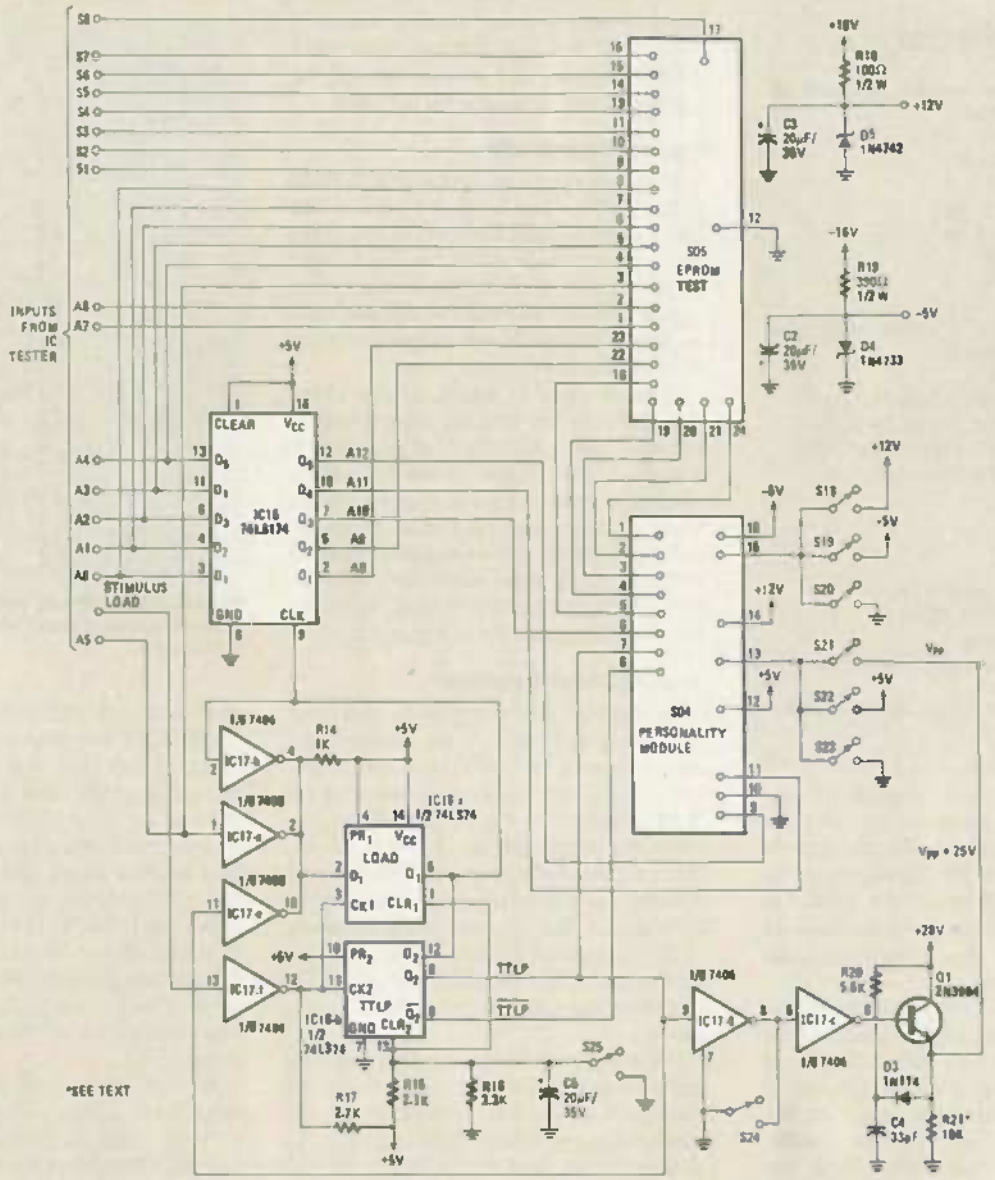

FIG. 11—EPROM PROGRAMMER SCHEMATIC. Note that some EPROM's require a 21-volt (instead of 25–26 volt) programming voltage. When programming such devices, you can either use a variable power-supply, or you can substitute a voltage divider (or trimmer potentiometer) for R21.

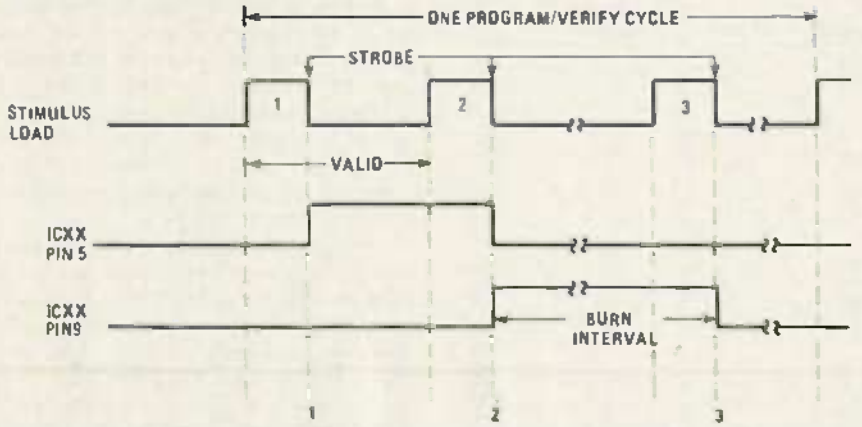

FIG. 12—THE THREE-PHASE cycle required to program or verify a single EPROM address. The program or verify function is selected by the programmer's switches. (See Fig. 13.)

module that is custom made for each style of EPROM. (The personality module can be made on a DIP header, and consists of appropriate jumpers. We'll get to the specifics of the jumpers shortly.) The switches (S18–S23) are configured to select either a program or verify function.

The personality-module outputs (pins 1–5) feed what may be termed the "variable" EPROM pins. Figure 13 defines the personality module and the program/verify configuration needed for each EPROM. We'll discuss those configurations in more detail later.

Construction

It is recommended—but not essential—that the programmer be built on the same board with the IC tester. Component placement, general signal routing, and construction method are not critical and are therefore left to your discretion. Don't forget that the EPROM programmer needs an external source of +28 volts at about 100 mA. (A variable power supply is preferred.)

Most of the signal connections to the IC tester can be seen in Fig. 11. The EPROM socket data-lines are connected to the isolation side (test-socket side) of the isolation switches so that they may be

www.americanradiohistory.com

PARTS LIST

All resistors are ¼-watt, 5% unless stated otherwise
R14—1000 ohms
R15, R17—2700 ohms
R16—3300 ohms
R18—100 ohms, ½ watt
R19—390 ohms, ½ watt
R20—5600 ohms
R21—10,000 ohms
Capacitors
C2, C3, C5—20 µF, 35 volts, electrolytic
C4—33 pF, ceramic disc
Semiconductors
IC15—74LS174 hex D-type flip-flop
IC16—74LS74 dual D-type flip-flop
IC17—7406 hex inverting buffer/driver
IC18—74LS367 hex bus driver
Q1—2N3904
D3—1N914
D4—1N4733
D5—1N4742
LED1—standard green LED
LED2—standard red LED
Other components
S18–25—SPST switch (DIP switches preferred)
Miscellaneous: IC sockets, jumper header, etc.

connected to the stimulus latches for programming or disconnected for program verifying. The least-significant address bits, A0 through A7, are connected to the most-significant byte of the stimulus latches and five of those (A0–A4), also go to IC15. The address lines are connected directly to the latches.

The personality-module socket (SO4) will accept a 16-pin header plug, which must be pre-wired for a particular type of EPROM (according to the data shown in Fig. 13.) As an example, consider the 2732 entry in that figure: Pin one is wired to pin twelve, pin two to pin eleven, pin three to pin thirteen, etc. Once you install the jumpers on the header, label it "2732." If you can manage, you might want to squeeze the switch settings for program/verify selection on the label.

Diagnostic indicator

Figure 14 shows an option you can add to the programmer to give both a visual and a software indication of the programmer's current phase. It can be very helpful for debugging and troubleshooting, and can be used by software to continuously monitor the state of the programmer for self-diagnostic purposes.

When a signal is active, its line to the test socket is low and the corresponding LED is illuminated. The host system may determine the current phase by simply reading the test socket and examining pins 9 and 10. (If you use this option, the isolation switches for test socket pins 9 and 10 will have to be open while the programmer is in use. Switch S25 must be closed when the programmer is not in use.)

Testing the programmer

Preliminary tests designed to check out the wiring and logic of the programmer are made with the EPROM socket empty and the 28-volt supply removed. Set up the IC tester with the test socket vacant, the power-supply jumpers removed, isolation switches for pins 9 and 10 open, and all other isolation switches closed. Open all eight of the programmer's switches (S18–S25) and, if practical, power the device up and down several times and verify that the power-on reset forces the idle condition.

All stimulus patterns can be viewed in terms of test-socket pins since, from the standpoint of the host computer, the expanded tester still appears as merely a 16-pin test socket. Referring to figure 15, the first stimulus pattern of the three-phase

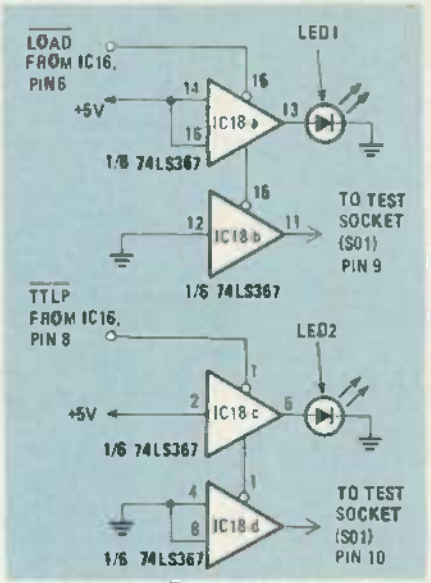

FIG. 14—FOR A VISUAL INDICATION of the programmer's current phase, you can add this diagnostic logic.

program/verify cycle will contain the upper EPROM address on the lines assigned to test-socket pins 9–13. The A8 bit must be high to enable this phase-one load, so the line assigned to pin 14 must also be high to enable the address-register (IC15) load and the phase advance. The second and third patterns are identical and will direct the EPROM lower address to pins 9–16 and data to be programmed to pins 1–8. Although many of the patterns may never actually reach the test socket, the host computer will "think" that an IC is being tested.

We can begin by testing the phase-advance logic. Using a stimulus with the A8 bit high, send the pattern repeatedly and check for the phases to progress according to Fig. 15. Starting in the idle condition, send the same stimulus once more and then change the pattern so that A8 is low. Send this new pattern ten or twelve times and observe that the phase is properly advanced to the idle state but the new pattern is not able to cause any further activity. It should be apparent that the issuance of two or more consecutive stimuli with A8 low will guarantee that the programmer goes to the idle state. The software can use that principle to implement a "restore" function.

For the remaining tests, you will need to insert a personality module for a 4K EPROM and set up the DIP switches to program. Make sure the switches agree with the personality-module style (see Fig. 13) and leave the EPROM socket empty. Send stimuli which will load various bit patterns into the address register and check the appropriate bits on the EPROM socket itself. Make the phase-two and -three bit patterns different from the first to be certain that the upper address bits are captured only during phase

EPROM TYPE	PERSONALITY MODULE JUMPERS	PROGRAM	VERIFY	VERIFY PROCEDURE
2704, 2708	1 – 12 2 – 16 3 – 15 4 – 14 5 – 13	S18 S21	S20 S23	V1 OR V2
2758	1 – 12 2 – 13 3 – 15 4 – 10 5 – 7	S19 S21 S24	S20 S21 S24	V1
2716	1 – 12 2 – 13 3 – 15 5 – 7	S19 S21 S24	S20 S21 5 – 10*	V1 OR V2
2732 *2732A	1 – 12 3 – 13 5 – 10	S21 S24	S23	V2

*YOU MAY WANT TO ADD A SWITCH TO AVOID CHANGING JUMPERS

FIG. 13—PERSONALITY MODULE AND SWITCH configurations for various EPROM's. See the text for more information on verify procedures V1 (load, load, load, read) and V2 (load, load, read, load).

www.americanradiohistory.com

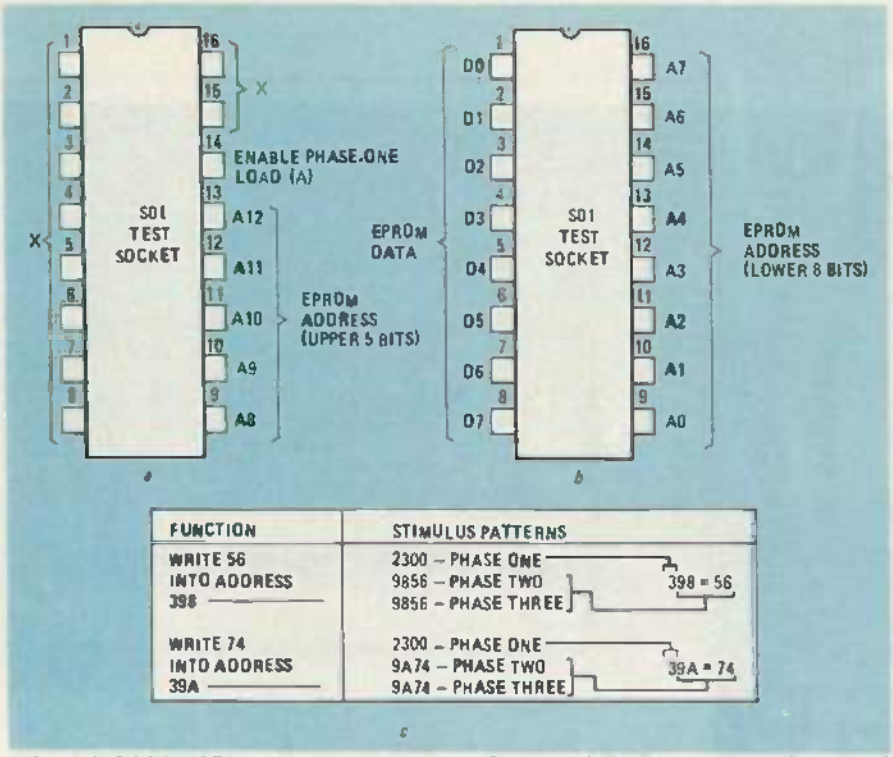

FIG. 15—THE SOFWARE views the programmer as an IC under test. The first pattern sent is assigned to the EPROM lines as shown in *a*, while the second and third patterns are assigned to the lines shown in *b*. Sample bit patterns (in hexadecimal form) used to program two EPROM address locations are shown in *c*.

one. Next, vary the phase-two and -three patterns and check the data and lower-address bits, again on the EPROM socket. By testing the bits on the socket, the wiring is checked out as well as the source logic.

For the next test, an 820-ohm, 2-watt resistor is needed. (If you don't have that unusual item you can combine four 3300-ohm ½-watt resistors in parallel.) In either case, take notice that the resistor(s) will become very warm to the touch.

With the programmer in the idle condition, apply +28 volts to the collector of Q1 and observe Q1's emitter for a voltage near ground potential. Close switch S24, and the emitter should go to about 27 volts. Now connect the resistor, which constitutes a typical load, from the emitter to ground and look for a voltage of 25 or 26 volts. If Q1 has been substituted for, and is dropping four volts or more, the substitution is not acceptable.

Leave S24 closed and the load connected for ten minutes or longer and then open S7. The emitter should return to near ground potential. With switch S7 open, cycle the device through the phases and confirm that transistor Q1's emitter is controlled by TTLP.

For the final hardware test, close switch S8 and make sure that the programmer is locked into the idle condition regardless of attempts to cycle it from the host computer. Now, with S8 closed and the EPROM socket empty, make sure the IC tester and any other expansion devices still function properly.

Using the programmer

Before you can use the programmer, you'll have to write some software to control it. A relatively simple (and popular) method is to store the intended EPROM contents in a main memory area and use software to transfer that data to the programmer (while keeping the address and data bits properly distributed and maintaining good program-pulse width).

The program will have to send the proper set of bits to the device during each phase and must control the program pulse width by means of a delay between phase two and phase three. Programming is more complex for the three-supply EPROM's because the source data is transferred to the EPROM a number of times as multiple passes are made. Don't forget that only a single pulse per address is permitted with single-supply EPROM types and the pulse width must be 50 milliseconds, ± 10%.

Figure 15 may be helpful in determining the address- and data-bit distribution among the three phases. Examples of exact stimuli for programming two locations are shown. Using that figure, you can develop software that will create and issue the appropriate patterns. You can leave the delay between phases two and three at a very low value for now. Check that the programmer is in the idle state when the software is initiated and that the software leaves the programmer in the idle state at completion. If your program doesn't do that, it is not observing the three-phase cycle requirements.

Once the raw program is developed to your satisfaction, you can work on adjusting the pulse width. You can do that easily with the aid of an oscilloscope by simply measuring TTLP and changing the software delay accordingly.

If you don't have an oscilloscope, use a clock or watch to measure the time it takes to transfer one or two kilobytes. Run the program with the EPROM socket empty, and adjust the software delay until the run time is 100 seconds, ±3 seconds.

The EPROM verify software is easier to create because there are no delays or multiple passes involved. The three-phase cycle is used to load the addresses, but the data patterns have no significance since the isolation switches to the EPROM data lines will be open during the verify operation.

There are two verify procedures, v1 and v2 specified in Fig. 13: In the v1 process, the host reads pins 1–8 of the test socket during the idle state after having executed the three-phase cycle to load the EPROM address. In the v2 process, the read is performed during phase three, and one more load is done to complete the cycle. Normally, the contents of the EPROM is either read into a main memory area for examination or compared with a memory area to verify the EPROM contents.

When you have the hardware and software debugged, you are ready to test the programmer with an EPROM in the socket and the V_{PP} supply connected. The first thing you'll want to check is that the EPROM is erased. Power the programmer down, insert an EPROM and the associated personality module, set up the DIP switches for verify (using Fig. 13), and open the isolation switches for test socket pins one through eight. Power the programmer up and run the verify software, checking for FFH patterns in all addresses.

Power may be removed from the programmer while the DIP switches are changed between program and verify, but be careful that V_{PP} is not applied to the EPROM while the five volt supply is removed. Set up the programmer switches for the program function and close the isolation switches for pins one through eight of the test socket. With the desired EPROM data loaded into the main memory source-area and the programmer in the idle condition, bring up the 28-volt supply and execute the EPROM program software. After the program runs, remove the 28-volt supply and set up the DIP and isolation switches for verify. Run the verify software and if the EPROM contents prove to be good, you have now successfully programmed an EPROM and the project has passed its final test. R-E

www.americanradiohistory.com

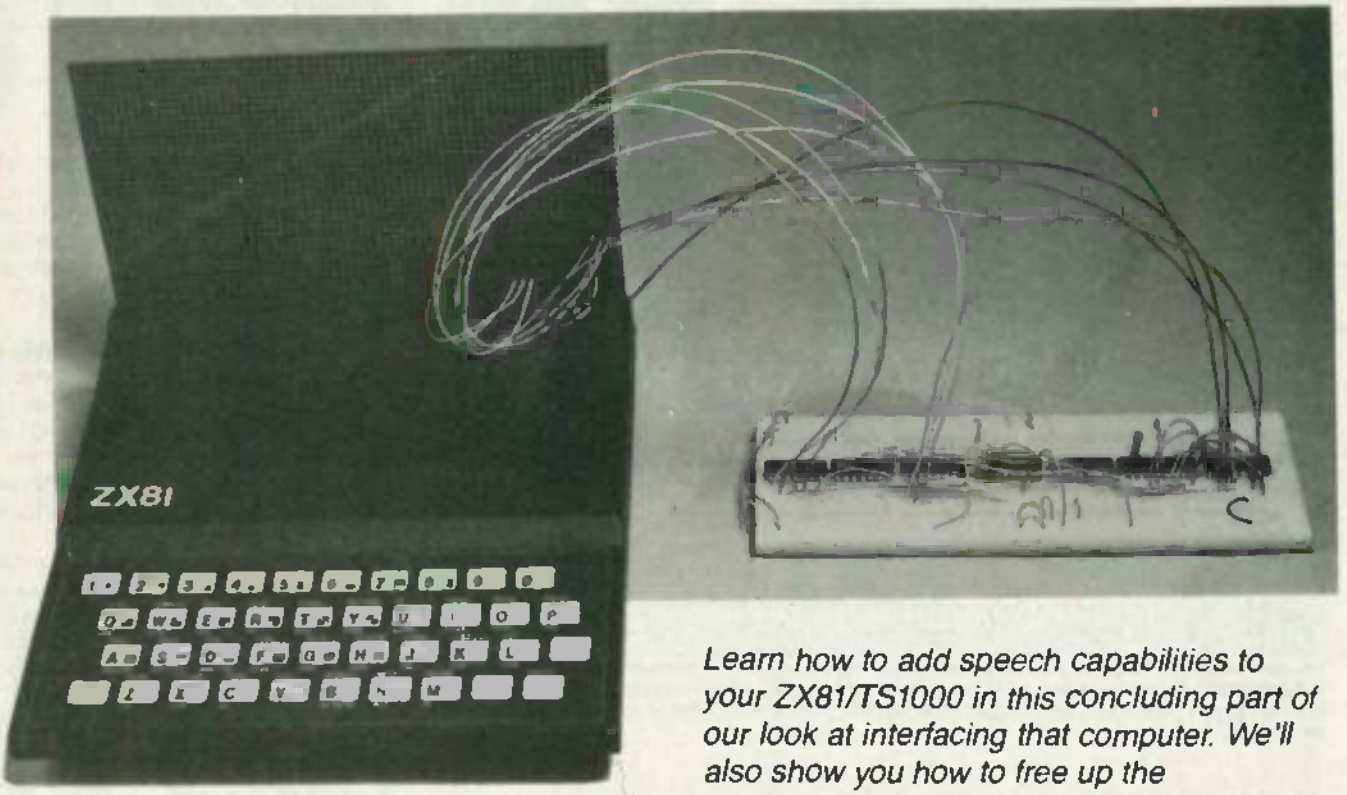

Learn how to add speech capabilities to your ZX81/TS1000 in this concluding part of our look at interfacing that computer. We'll also show you how to free up the computer's port for other uses.

Interfacing the ZX81

NEIL BUNGARD

Part 4 THIS MONTH, WE'LL finish up our look at interfacing the *ZX81/TS1000* by showing you how you can add speech capabilities to that machine.

Adding speech capabilities

A *Digitalker* speech synthesizer is the last of the external circuits that we'll be adding to our interface. The *Digitalker*, which is manufactured by National Semiconductor, consists of a speech processor IC (SPC) and ROM that contains the synthesizer's vocabulary. (For more information on the *Digitalker*, see the July 1982 issue of **Radio-Electronics**.)

We'll be using a set of three IC's (the SPC and two 8 × 8K ROM IC's) called the DT1050. It sells for about $35 and is available from a number of suppliers, including Jameco Electronics.

The complete synthesizer is not difficult to build: All that's required is to add simple filter and amplifier circuits to the DT1050 IC set.

As we mentioned before, the synthesizer's vocabulary (which consists of 137 separate "words," 2 tones, and 5 different silence durations) is contained in two ROM IC's (MM52164SSR1 and MM52164SSR2). The vocabulary is listed in Table 21. (That is the most popular vocabulary set, although other ROM's with different, and larger, vocabularies are available.)

The synthesizer circuit, as shown in Fig. 11, consists of a digital and an analog section. The digital section consists of the speech-processor IC22, two ROM's, IC23 and IC24, and two 7400-series IC's for control-signal decoding.

The analog section of the circuit consists of IC25 and IC26. IC25 is an LM346 op-amp that is configured as a lowpass filter with a rolloff frequency of about 200 Hz. The filter is required to take out the high-frequency noise generated by the *Digitalker*'s speech-synthesis technique. IC26 is an LM386 audio-amplifier IC that is used to drive a small 8-ohm speaker.

To use the *Digitalker* with the *ZX81*, 8 data-bus and 3 control-line connections are required. The data bus carries information to the SPC (telling it which word to speak). The control signals are used to time the information transfer and start the speech sequence. Figure 12 shows the control-signal timing necessary to write information to the SPC.

That control-signal timing is accomplished with 3 output device-code pulses (18, 14, and 1C) and a IC20. When pin 2 of the IC20 sees a low-going pulse accomplished with an "OUT 14" device-code pulse, its output (pin 12) goes to a logic Ø. (That's the negative-going edge of the pulse generated on the cs input of the SPC in the waveform shown in Fig. 12.) Next an "OUT 18" device-code pulse is generated to the WR input of the SPC. That pulse initiates the data transfer into the SPC, and starts the speech sequence. The final device-code pulse that is generated is "OUT 1C", which sets the output of the 74LS73 (pin 12) back to a logic 1 and deselects the SPC. (That's the rising edge of the pulse in the top waveform in Fig. 12.)

As long as the *Digitalker* is speaking, its INTR output (pin 6) is at logic Ø. At the end of a speech sequence however, the INTR line goes to a logic 1.

The status of INTR is checked by using an "IN ØC" device-code pulse which is

www.americanradiohistory.com

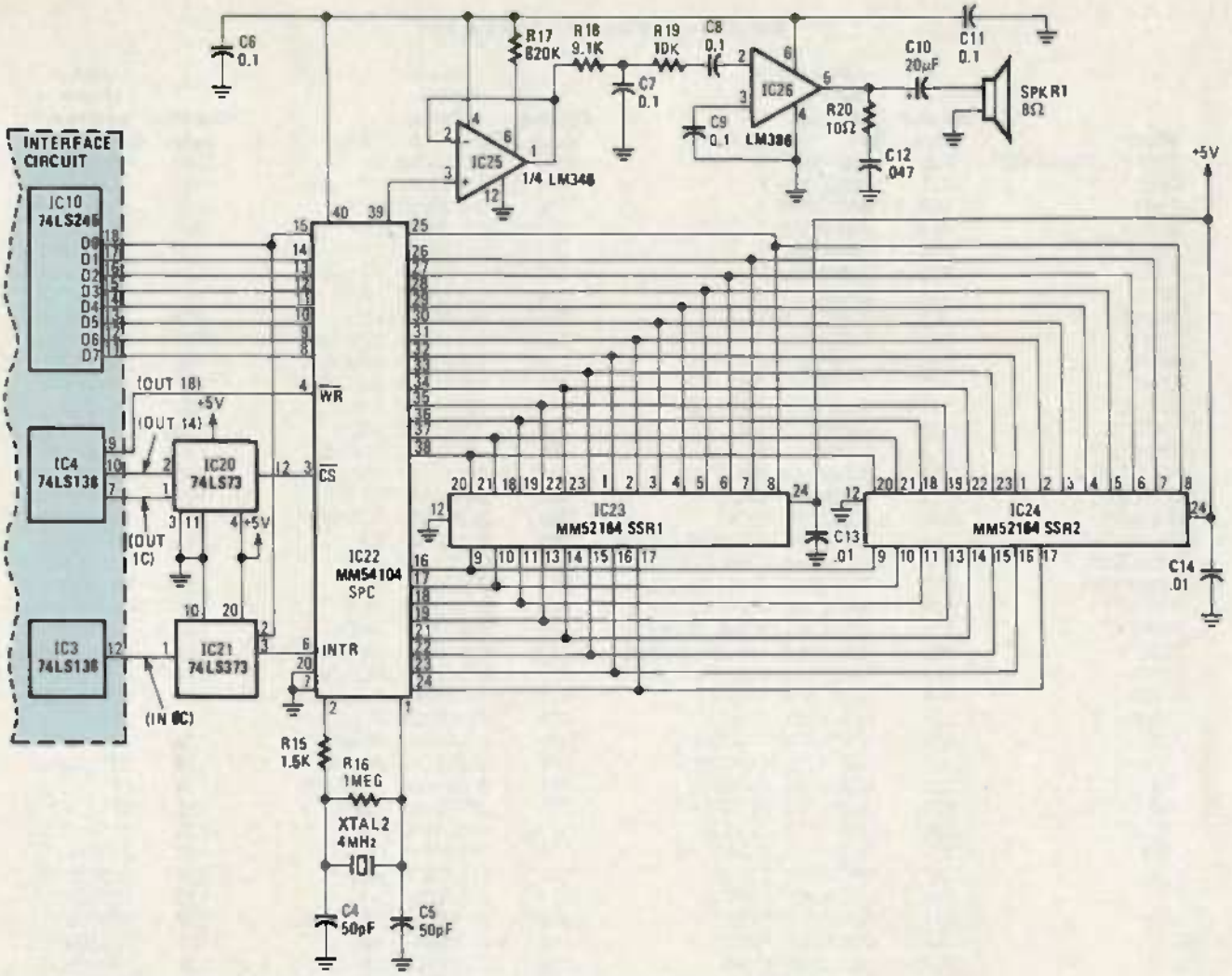

FIG. 11—THE SPEECH SYNTHESIZER circuit, thanks to large-scale integration, is not as complex as you might think. For best voice quality, don't use a very small speaker for SPKR1.

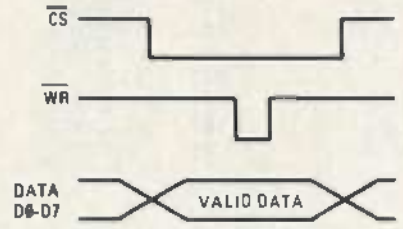

FIG. 12—THREE Z80 CONTROL SIGNALS are needed to generate the timing shown here.

connected to the ENABLE pin of IC21, a 74LS373 three-state latch. When IN 0C is generated, the status of the INTR output of the SPC is sent through IC10 to the Z80 accumulator on data-bus bit D0. If D0 is a logic 0, the speech sequence is still in progress. If D0 is a logic 1, then the speech sequence has ended, and the next word can be sent to the SPC.

We will demonstrate the capabilities of the *Digitalker* by using a machine-language routine and two BASIC programs. Remember that the programs we'll use are only a starting point. You are encouraged to modify the programs. For example, you might want to use the *Digitalker* with any of the other interface projects presented in this series.

To begin, first reserve the required space for the machine-language program which operates the *Digitalker*'s circuitry. A 20-character REM statement accomplishes that task. Then load the machine-language subroutine listed in Table 22. When the machine code has been entered, erase the loader program (if you used one) and load the BASIC program in Table 23.

Let's follow the two programs to see what they accomplish. Beginning in line 20 of the BASIC program, the variable "A" (which represents the numerical value of the word that the *Digitalker* will be asked to speak) is set to zero. (A complete listing of the *Digitalker*'s 144-word vocabularly and each word's associated numerical value is shown in Table 21.) Line 30 places the value of "A" into a memory location where it will later be retrieved by the machine-language subroutine that is called by line 40.

The first three instructions of the machine-language program repeatedly check the INTR output of the SPC to determine if a speech sequence has ended. As we mentioned previously, that's done by generating an input device-code pulse (IN 0C), setting all bits of the accumulator to a logic 0 except bit D0 (AND 01), and asking if D0 is a logic 1 or a logic 0 (JZ 82 40). If D0 is a logic 0, program execution returns to the beginning of the machine-language routine. If D0 is a logic 1, which means the speech sequence has ended, the numerical value of the next word to be spoken is retrieved from memory location 4095H (16533), where it was previously stored by the BASIC routine. That's accomplished with the instructions: LD B,40, LD C,95, and LD A,(BC). Once the numerical value of the next word to be spoken is in the accumulator of the Z80, it is transferred to the SPC by a series of output instructions (OUT 14, OUT 18, and OUT 1C).

With the data transferred to the SPC, the speech sequence starts automatically. Program execution returns to the BASIC

www.americanradiohistory.com

TABLE 21—DIGITALKER VOCABULARY

Word	Decimal value	8-bit binary address S8 S1
THIS IS DIGITALKER	000	00000000
ONE	001	00000001
TWO	002	00000010
THREE	003	00000011
FOUR	004	00000100
FIVE	005	00000101
SIX	006	00000110
SEVEN	007	00000111
EIGHT	008	00001000
NINE	009	00001001
TEN	010	00001010
ELEVEN	011	00001011
TWELVE	012	00001100
THIRTEEN	013	00001101
FOURTEEN	014	00001110
FIFTEEN	015	00001111
SIXTEEN	016	00010000
SEVENTEEN	017	00010001
EIGHTEEN	018	00010010
NINETEEN	019	00010011
TWENTY	020	00010100
THIRTY	021	00010101
FORTY	022	00010110
FIFTY	023	00010111
SIXTY	024	00011000
SEVENTY	025	00011001
EIGHTY	026	00011010
NINETY	027	00011011
HUNDRED	028	00011100
THOUSAND	029	00011101
MILLION	030	00011110
ZERO	031	00011111
A	032	00100000
B	033	00100001
C	034	00100010
D	035	00100011
E	036	00100100
F	037	00100101
G	038	00100110
H	039	00100111
I	040	00101000
J	041	00101001
K	042	00101010
L	043	00101011
M	044	00101100
N	045	00101101
O	046	00101110
P	047	00101111
Q	048	00110000
R	049	00110001
S	050	00110010
T	051	00110011
U	052	00110100
V	053	00110101
W	054	00110110
X	055	00110111
Y	056	00111000
Z	057	00111001
AGAIN	058	00111010
AMPERE	059	00111011
AND	060	00111100
AT	061	00111101
CANCEL	062	00111110
CASE	063	00111111
CENT	064	01000000
400HERTZ TONE	065	01000001
80HERTZ TONE	066	01000010
20MS SILENCE	067	01000011
40MS SILENCE	068	01000100
80MS SILENCE	069	01000101
160MS SILENCE	070	01000110
320MS SILENCE	071	01000111
CENTI	072	01001000
CHECK	073	01001001
COMMA	074	01001010
CONTROL	075	01001011
DANGER	076	01001100
DEGREE	077	01001101
DOLLAR	078	01001110
DOWN	079	01001111
EQUAL	080	01010000
ERROR	081	01010001
FEET	082	01010010
FLOW	083	01010011
FUEL	084	01010100
GALLON	085	01010101
GO	086	01010110
GRAM	087	01010111
GREAT	088	01011000
GREATER	089	01011001
HAVE	090	01011010
HIGH	091	01011011
HIGHER	092	01011100
HOUR	093	01011101
IN	094	01011110
INCHES	095	01011111
IS	096	01100000
IT	097	01100001
KILO	098	01100010
LEFT	099	01100011
LESS	100	01100100
LESSER	101	01100101
LIMIT	102	01100110
LOW	103	01100111
LOWER	104	01101000
MARK	105	01101001
METER	106	01101010
MILE	107	01101011
MILLI	108	01101100
MINUS	109	01101101
MINUTE	110	01101110
NEAR	111	01101111
NUMBER	112	01110000
OF	113	01110001
OFF	114	01110010
ON	115	01110011
OUT	116	01110100
OVER	117	01110101
PARENTHESIS	118	01110110
PERCENT	119	01110111
PLEASE	120	01111000
PLUS	121	01111001
POINT	122	01111010
POUND	123	01111011
PULSES	124	01111100
RATE	125	01111101
RE	126	01111110
READY	127	01111111
RIGHT	128	10000000
SS	129	10000001
SECOND	130	10000010
SET	131	10000011
SPACE	132	10000100
SPEED	133	10000101
STAR	134	10000110
START	135	10000111
STOP	136	10001000
THAN	137	10001001
THE	138	10001010
TIME	139	10001011
TRY	140	10001100
UP	141	10001101
VOLT	142	10001110
WEIGHT	143	10001111

TABLE 22—DIGITALKER CONTROL

```
DB 0C       IN 0C
E6 01       AND 01
CA 82 01    JZ 82 40
06 40       LD B,40
0E 95       LO C,95
0A          LD A,(BC)
D3 14       OUT 14
D3 18       OUT 18
D3 1C       OUT 1C
C9          RET
```

program in line 50, which increments the variable "A" by 1. Line 60 sends program execution back to line 30 where the new value will be sent to the SPC and the next word in Table 21 will be spoken by the *Digitalker*.

When the synthesizer is controlled by the programs we have just discussed, it will speak, starting with the first word in the listing in Table 21, and say all of the words sequentially. You'll notice that although the last valid word has a numerical value of 143, the program sequences through 255—there are 112 undefined values which are spoken. Those undefined values generate some garbled sounds. But

continued on page 82

TABLE 23—AUTOMATIC DIGITALKER OPERATION

```
20 LET A=0
30 POKE 16533, A
40 LET B=USR 16514
50 LET A=A+1
60 GOTO 30
```

TABLE 24—MANUAL DIGITALKER OPERATION

```
20 LET A$=""
30 IF A$="" THEN INPUT A$
40 LET B$=A$(TO 3)
50 LET A$=A$(4 TO)
60 LET A=VAL B$
70 POKE 16514,A
80 LET B=USR 16514
90 GOTO 30
```


www.americanradiohistory.com

DESIGNING WITH LINEAR IC'S

A look at two lesser known but still powerful devices—the logarithmic and isolation amplifiers.

JOSEPH J. CARR

Part 6 THIS MONTH, WE WILL look at two lesser-known linear devices: logarithmic and isolation amplifiers. Let's start with the logarithmic amplifier.

A logarithmic amplifier produces an output voltage that is proportional to the log of the input voltage. We can build a logarithmic amplifier by combining an ordinary op-amp and an NPN silicon transistor, as shown in Fig. 1. Transistor Q1 is connected in the negative feedback loop such that the op-amp output voltage, V_O, is also the transistor's base-emitter voltage, V_{BE}, and the transistor's collector current, I_C, is also the feedback current applied to the summing junction. From the above discussion and basic transistor theory we know the following:

$$V_{BE} = \frac{KT}{Q} \text{ IN} \left(\frac{I_C}{I_S} \right) \quad (1)$$

$$V_O = V_{BE} \quad (2)$$

From basic op-amp theory we also know:

$$I_C = -I1 \quad (3)$$

and

$$I1 = V_I/R1 \quad (4)$$

so we are justified in writing Equation 1 as:

$$V_O = \frac{KT}{Q} \text{ IN} \left(\frac{V_I/R1}{I_S} \right) \quad (5)$$

where: K is Boltzmann's constant, Q is the electronic charge, T is the temperature in degrees Kelvin, V_I is the input voltage, R1 is the input resistor, and I_S is the transistor's reverse-saturation current. The terms K, Q, R1, and I_S are constants, and T can be made constant. In essence, therefore, Equation 5 tells us that output voltage V_O is a function of input voltage V_I and some constants. We are justified, therefore, in calling the circuit shown in Fig. 1 a logarithmic amplifier.

There is still a problem, however, which makes Fig. 1 a little too simple for practical application: temperature, T. It is not likely that the temperature of Q1 will remain constant, so the output signal will contain a variable term that is independent of the input voltage, V_I; in other words, there is an error associated with temperature.

Eliminating the temperature error requires the use of thermistors or PN junctions connected so that the effects of temperature are counteracted. For many circuit designers the best solution to that hassle is to buy an IC or hybrid logarithmic-amplifier device.

So what use is the log amp? Rarely will some instrument need to take the logarithm of the input signal, but there are cases where that is desirable, for instance for input-data compression. Many instruments will see analog signals that have an extremely wide dynamic range. Yet we find that amplifier gains that give us adequate low-level resolution will cause saturation on high-level signals. But if the gain is low enough to prevent saturation, then we lose the ability to resolve changes in low-level signals. The solution to that problem is to use a logarithmic amplifier that has a different gain at different input-signal levels.

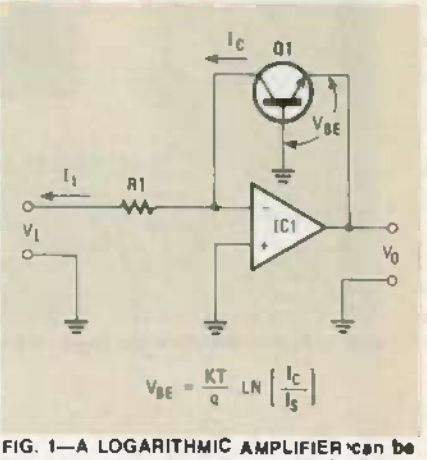

FIG. 1—A LOGARITHMIC AMPLIFIER can be formed by combining an ordinary op-amp with an NPN translator.

If we want to decompress the analog data, or take the antilog of an analog signal for any other reason, then we may want to use an antilog amplifier (see Fig. 2). To make that type of amplifier is simple: We merely reverse the positions of R1 and Q1 in the log amp. The antilog amplifier of Fig. 2 also requires temperature compensation.

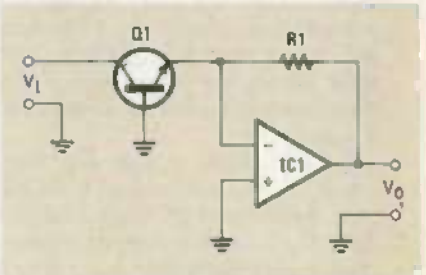

FIG. 2—AN ANTI-LOG AMPLIFIER circuit resembles the log-amp circuit. Only the circuit positions of Q1 and R1 have been swapped.

Figure 3 shows the block diagram for the Burr-Brown 4301 and 4302 hybrid amplifiers. Those two devices are essentially the same except for package style (plastic-vs-metal) and temperature range. The 4301/02 contains logarithmic amplifiers and a summing network. The device accepts three input voltages (V_X, V_Y and V_Z) that produces an output voltage according to the transfer function:

www.americanradiohistory.com

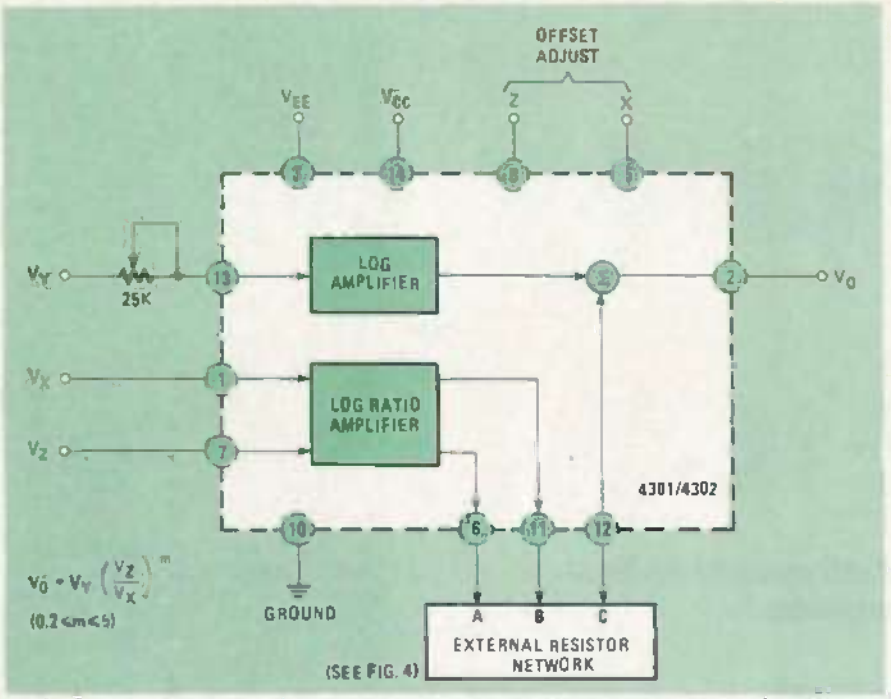

FIG. 3—BLOCK DIAGRAM and pinout of the Burr-Brown 4301/4302 hybrid logarithmic amplifiers.

$$V_O = V_Y \left(\frac{V_Z}{V_X}\right)^m \qquad (6)$$

where V_O is the output voltage; V_X, V_Y, and V_Z are input voltages, and m has a value between 0.2 and 5.0. The value of m is set by a simple resistor network. Because of that, the 4301/02 allows us to create transfer functions that would otherwise be difficult to achieve with simple circuitry. Figures 4-a through 4-c show the resistor networks for three cases: m = 1, m<1, and m>1, respectively.

Typical applications for the 4301/02 are shown in Figs. 5, 6, and 7. Figure 5 shows a simple analog multiplier in which m = 1 and the V_X input is biased to a constant value. Hence, the output voltage will be the product of V_Y and V_Z, divided by the V_X constant.

Figure 6 shows an analog-divider circuit built along similar lines to the multiplier. Again, m is set to one, and, in this case, V_Y is set to a constant value. The result is an output voltage $V_O = 10V_Z/V_X$.

Figure 7 shows a circuit that might be called an exponentiator, and has a transfer function of $V_O = 10(V_Z)^m$, where m is set by R4, as shown in Fig. 7-b and Fig. 7-c. Of course, each potentiometer can be replaced with a pair of resistors selected according to the equations shown in Figs. 4-b and 4-c.

Isolation amplifiers

There are certain cases where it is desirable to maintain a very high degree of isolation between the inputs and outputs of an amplifier. If there is some factor in one environment that is dangerous to the other, then the use of an isolation amplifier is justified. Biomedical instruments are a case in point. It is believed that the maximum safe exposure to 60-Hz AC for certain patients is about 10 microamperes. Normal leakage currents can exceed that value by a couple orders of magnitude, so medical equipment designers usually specify an isolated input amplifier stage. For medical applications it is common to find the degree of isolation expressed as 10^{12} ohms between inputs and the power terminals of the nonisolated side of the circuit.

Previously, isolation amplifiers were built from discrete components. Today, however, we can buy hybrid isolation amplifiers from several sources. At least two methods are now being used to achieve isolation: transformer coupling and optical coupling.

Figure 8 shows the transformer-coupling method in block-diagram form. A high-frequency (50 to 500 kHz) signal is generated in a power oscillator on the nonisolated side of the circuit. The use of such high frequencies allows the construction of transformers (T1 and T2) that easily pass the signal but severely attenuate the low-frequency 60-Hz AC leakage.

The oscillator output signal (200 kHz in this example) is coupled to the isolated side of the circuit via transformer T1. The oscillator signal is used for two purposes. Those are to provide 200-kHz AC to the rectifier/filter isolated DC power-supply, and to provide a 200-kHz carrier to the modulator stage.

The purpose of the isolated DC power-supply is to completely divorce the power for the isolation amplifier from the power

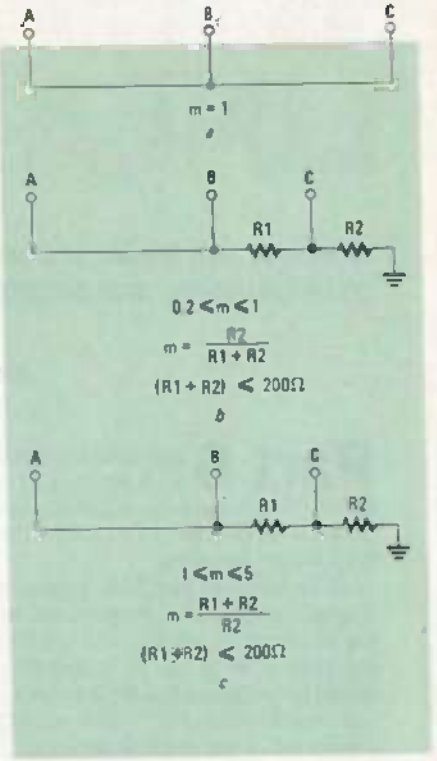

FIG. 4—THESE SIMPLE RESISTOR NETWORKS are used to set the value of m. The one in *a* is for the m = 1 case, the one in *b* is for the m<1 case, and the one in *c* is for the m>1 case.

for the nonisolated "outside world." Since the current level is very low, the rectifiers used in that circuit are often ordinary signal diodes rather than rectifier diodes. Also, the high frequency of the AC, 200 kHz, allows use of very low-value filter capacitors in the isolated DC-supply; we don't need large, high-value electrolytic capacitors.

Amplifier IC1 is connected to the signal source (a patient in biomedical applications, for instance). That stage usually has a medium level-gain that is a healthy fraction of the total gain. The signal from the output of IC1 is fed to the input of a modulator stage. The modulator output is an AM signal with a carrier frequency of 200 kHz. The AM signal is coupled to the nonisolated side of the circuit via transformer T2.

The original signal (V_I) is recovered by demodulating the AM signal. While some designs use simple envelope detectors (as in AM radios), others use a phase-sensitive detector (also called a synchronous

www.americanradiohistory.com

detector) for the demodulator stage. That type of AM detector requires a sample of the carrier, so a 200-kHz signal is provided by the power oscillator.

Following the demodulator will be an output buffer-amplifier (IC2). That stage may or may not provide variable gain, depending on design.

Optically-coupled isolation amplifiers (see Fig. 9), as their name would imply, use light to carry the signal from isolated to nonisolated sides of the circuit. Most isolation amplifiers are of the optoisolator variety. That device should be familiar to most **Radio-Electronics** readers. It consists of a light-emitting diode (LED) and a phototransistor housed in an IC package. Although many people are aware of the digital applications of the optoisolator, it is also possible to use that device in linear applications. For instance, if we modulate the LED light, the pattern of modulation is reproduced at the transistor output.

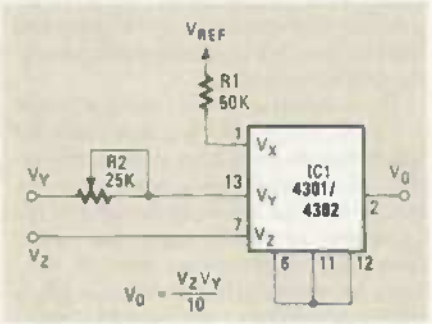

FIG. 5—IN THIS APPLICATION, an analog multiplier, the output is the product of V_Y and V_Z, multiplied by V_X.

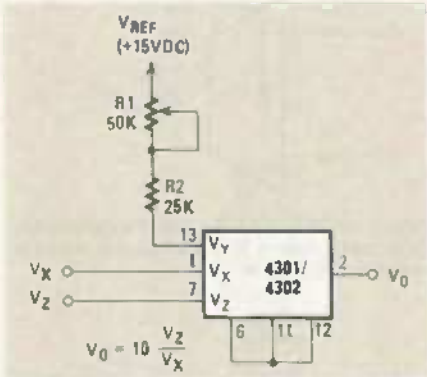

FIG. 6—IN THIS ANALOG DIVIDER, the output is equal to $10V_Z$ divided by V_X.

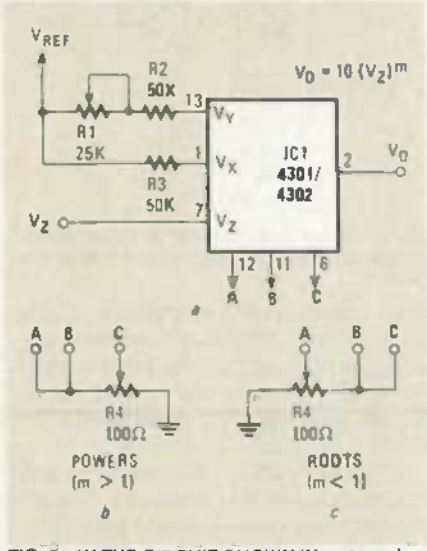

FIG. 7—IN THE CIRCUIT SHOWN IN *a*, the value of m is set by R4 as shown in *b* and *c*.

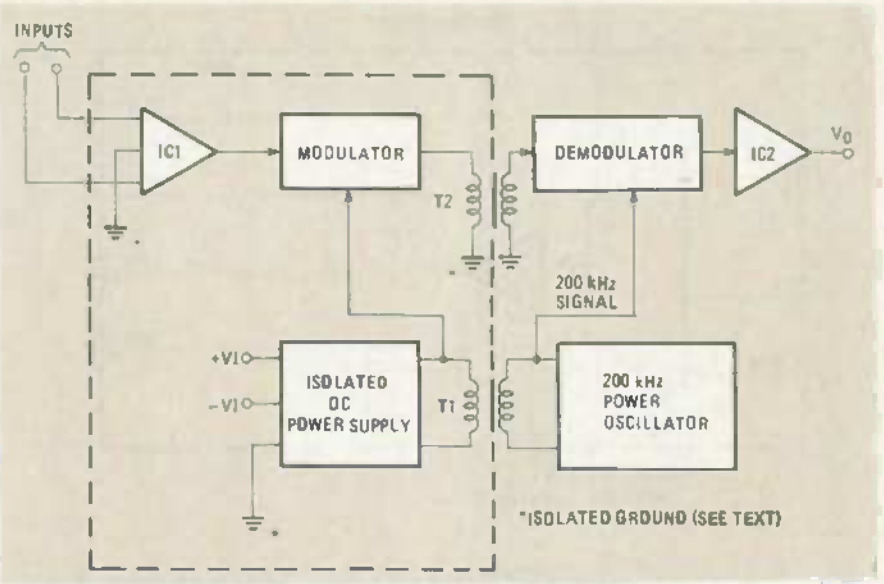

FIG. 8—BLOCK DIAGRAM of a transformer-coupled isolation amplifier. The transformers used are designed to pass the high-frequency signals but sharply attenuate any 60-Hz leakage current.

Note in Fig. 9 the use of an isolated ground for the input stage. If isolation is to be achieved, the input-stage ground must be kept separate from the ground used by the balance of the circuit.

Figure 10 shows the pinouts and block diagram for the Burr-Brown 3650 and 3652 isolation amplifiers. The two devices differ from each other in that the 3650 is a current-input amplifier and the 3652 can be configured for either a current or voltage input. Both the 3650 and 3652 are optically coupled and use a unique Burr-Brown circuit that tends to cancel the drift problems seen on certain other optically-coupled designs.

The 3650/52 devices do not contain a built-in isolated power supply. The +V and −V voltages to the nonisolated side can be supplied from the regular DC supply used in the rest of the circuit. The voltages for the isolated stages must come from a source that is isolated from the AC power lines. That requirement usually means batteries (not while connected to the charging circuit!) or an external, isolated power-supply. Burr-Brown makes several suitable DC-to-DC converters including single-port (710), dual-port (722) and quad-port (724) versions. The dual- and quad-port versions will supply power for two or four isolation amplifiers, respectively.

Figure 11 shows a 3650 with differential current-source inputs (I1 and I2). The gain of the isolation amplifier is 10^6 volts per ampere, so the output voltage is given by:

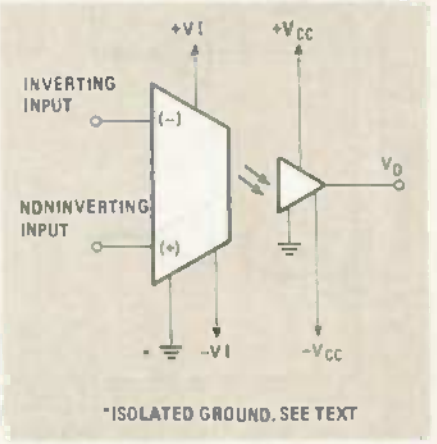

FIG. 9—OPTICALLY COUPLED isolation amplifiers require the use of a separate, isolated ground for the input stage.

$$V_O = (I1 - I2)\ (10^6\ V/A) \qquad (7)$$

where: I1 and I2 are the input currents in amperes.

A voltage-input configuration for the 3650 is shown in Fig. 12. In that circuit, two input resistors (R_G1 and R_G2) are in series with the input terminals of the 3650. The gain is given by:

$$V_O = \frac{10^6}{R_G1 + R_G2 + R_{IN} + R9}\ (V1\text{-}V2) \qquad (8)$$

where: R_G1 and R_G2 are the external resistors shown in Fig. 12, R_{IN} is the nominal input resistance of the 3650, and R_O is the output resistance of the driving signal-source. In many practical cases we find it possible to lump R_{IN} and R_O together into one term of approximately 115 ohms. That action makes the gain dependent solely upon R_G1 and R_G2. The resultant simplification will break down only when using a signal source with an excessive output resistance.

www.americanradiohistory.com

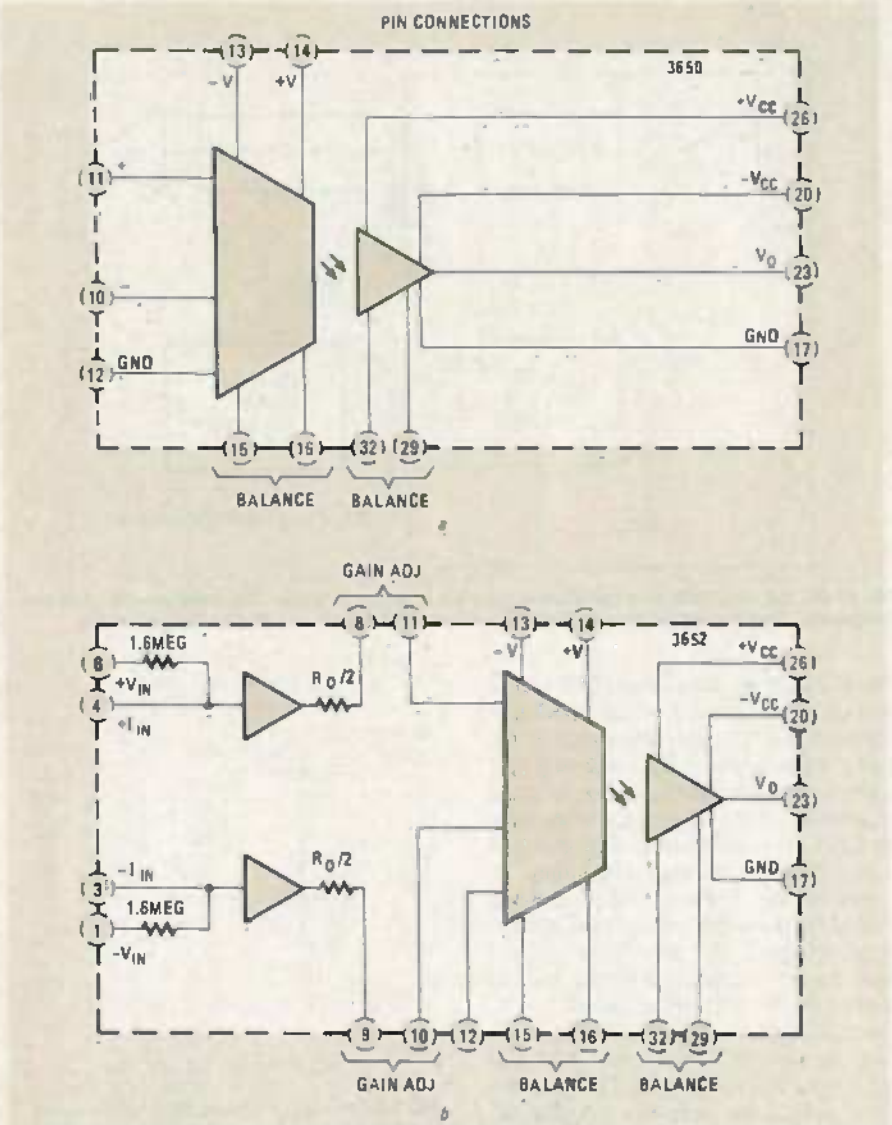

FIG. 10—BLOCK DIAGRAM and pinout of the Burr-Brown 3650 is shown in *a*; the block diagram and pinout of the Burr-Brown 3652 is shown in *b*.

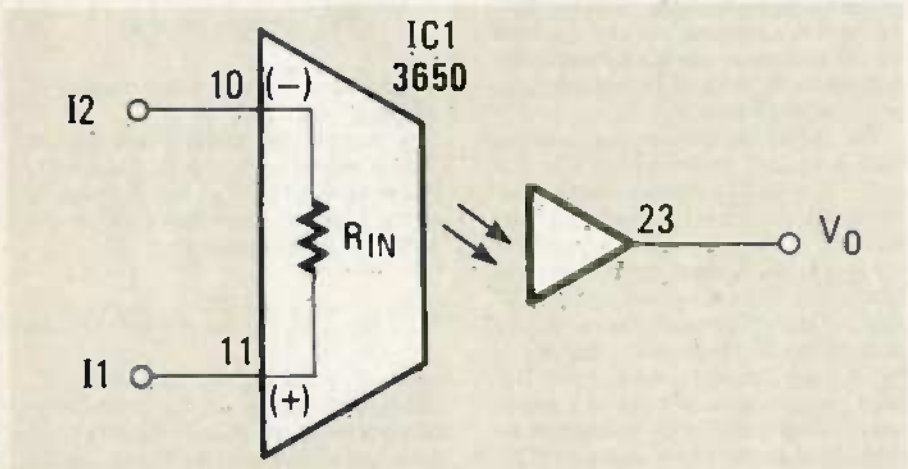

FIG. 11—HERE, THE 3650 is configured with differential current-inputs.

The configuration for the voltage-input 3652 is shown in Fig. 13. As in the previous case, the gain is set by Eq. 8 with $R_O + R_{IN}$ lumped together as 115 ohms. Let's rewrite Eq. 8 in simplified form to solve for R_G1 and R_G2 when the gain is known. As a basic assumption $R_G1 = R_G2 = R_G1$, so Eq. 8 becomes:

$$R_G = \frac{1}{2}\left(\frac{10^6}{A_V} - 115\right) \quad (9)$$

Let's look at an example: Calculate R_G1 and R_G2 for an amplifier with a gain (A_V) of 1000 (10^3). Assume a 3652 isolation amplifier and $R_G1 = R_G2$. Then:

$$R_G = \frac{1}{2}\left(\frac{10^6}{10^3} - 115\right)$$

$$= \frac{1}{2}(1000 - 115)$$

$$= 442.5 \text{ ohms}$$

In a practical case we would accept a tiny gain error by using $R_G = 440$ ohms (a standard value). If precise gain is required, then we may either trim those resistors or factor the gain into two parts and make up the error in an adjustable preceding or following stage.

The isolation amplifier is unique in that it solves certain interface problems for which no other solution is even reasonable. Biomedical applications probably require their use the most, because of the importance of patient safety. But, some biomedical applications provide very harsh environments. Electrocardiograph (ECG) amplifiers, for example, must sometimes withstand a 2000–3000 volt,

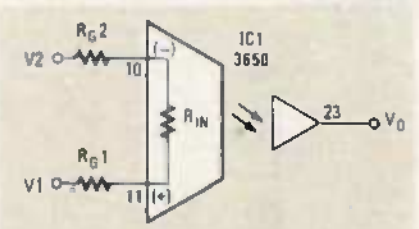

FIG. 12—IN THE VOLTAGE-INPUT CONFIGURATION, two resistors, R_G1 and R_G2, are placed in series with the inputs.

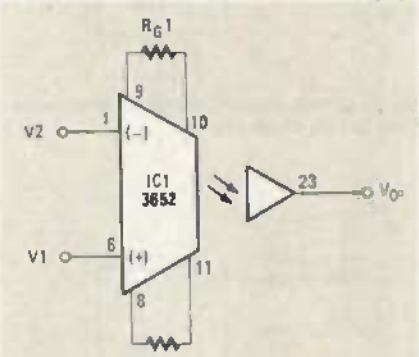

FIG. 13—THE 3652 configured for voltage input. The gain for the circuit is given by Equation 8 in the text.

10-ms, shock from a defibrillator. Those machines are high-voltage, electrical-discharge devices used to administer an electric shock to correct fatal heart rhythms. The isolation amplifier must therefore be rated to withstand such shocks.

When we continue this series, we will deal with waveform-generator circuits that are based on operational amplifiers. We will include sinewave, squarewave, and pulse generators, and more! R-E

www.americanradiohistory.com

ALL ABOUT

CMOS CLOCK CIRCUITS

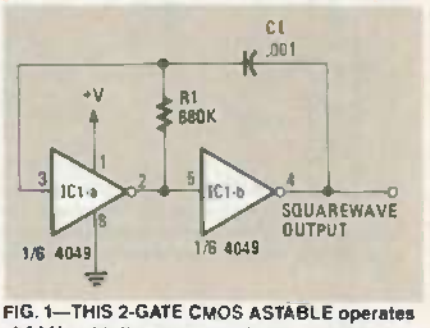

FIG. 1—THIS 2-GATE CMOS ASTABLE operates at 1 kHz with the component values shown.

The next time you need a clock generator, pick out one of these CMOS-based designs.

RAY MARSTON

IN THE SEPTEMBER ISSUE, WE TOOK A look at squarewave-generator circuits. This month, we'll take another look. However, instead of using transistors, op-amps and 555 timer IC's, we'll deal only with designs based on CMOS IC's.

CMOS logic IC's can easily be used to make squarewave-generator or "clock" circuits that are both inexpensive and highly versatile. The outputs can be symmetrical or non-symmetrical, and the oscillators can be either free-running or gated. The gated oscillators can be designed to turn on with either logic-0 or logic-1 signals, and to give either a logic-0 or a logic-1 output when in the "off" mode. You can even use those "cheapo" circuits as simple VCO's (*V*oltage-*C*ontrolled *O*scillators) or as frequency-modulated oscillators.

If you want VCO operation with excellent linearity and versatility, then you have to be slightly more particular about the IC you use. We'll get to that in just a little while. But first, the basics: 2-gate CMOS squarewave-generator or astable circuits.

Two-gate astable oscillators

The simplest way to make an astable circuit is to wire two CMOS inverter stages in series and use the R-C feedback network shown in Fig. 1. That circuit generates a decent squarewave output and operates at about 1 kHz with the component values shown. The frequency is inversely proportional to the R-C time constant, so it can be raised by lowering the values of either C1 or R1. Capacitor C1 must be a non-polarized type; it can have any value from a few tens of pF to several µF. Resistor R1 can have any value from about 47 kilohms to 22 megohms. With those ranges of values, the operating frequency can vary from below 1 Hz to about 1 MHz. For variable-frequency operation, R1 should be replaced by a series combination of a fixed and a variable resistor.

The output of the astable circuit in Fig. 1 switches (when lightly loaded) almost fully between the zero and positive supply rail values. But the R1-C1 junction is prevented from swinging below zero or above the positive rail levels by on-chip clamping diodes at the input of IC1-a. That characteristic causes the operating frequency of the circuit to be somewhat dependent on the supply: Typically, the frequency falls by about 0.8% for a 10% rise in supply voltage. If the frequency is normalized with a 10-volt supply, the frequency falls by 4% at 15 volts or rises by 8% at 5 volts.

The operating frequency of the circuit shown in Fig. 1 is also influenced by the individual gates that are used. You can expect the frequency to vary by as much as 10% between individual IC's. The output symmetry of the waveform also depends on the particular IC used and, in most cases, the circuit will give a non-symmetrical output. In most "hobby" or other non-precision applications, those defects of the basic astable circuit are of little practical importance.

We should note here that for the circuit in Fig. 1—and all of the others that we'll present this month—the supply voltage indicated by "+V" can be anywhere from 3 to 18 volts DC. Also, the CMOS IC's used are all of the "B-series" type (with improved gate-oxide protection.)

Figure 2 shows an improved, "compensated" astable circuit in which R2 is wired in series with the input of IC1-a. That resistor must have a value that is large relative to R1; its main purpose is to allow

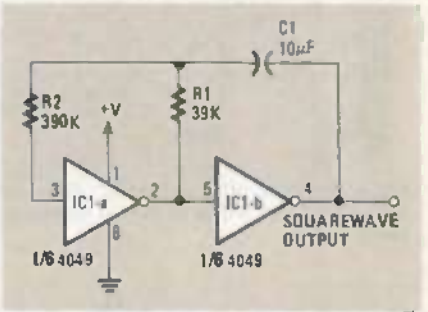

FIG. 2—THE "COMPENSATED" VERSION of the 2-gate astable oscillator has excellent frequency stability with variations in supply voltage.

the R1-C1 junction to swing freely below the zero and above the positive supply rail voltages during circuit operation and thus improve the frequency stability of the circuit. Typically, when R2 is ten times the value of R1, the frequency varies by only 0.5% when the supply voltage is varied between 5 and 15 volts. An incidental benefit of R2 is that it gives a slight improvement in the symmetry of the output of the astable.

The basic and compensated astable circuits of Figs. 1 and 2 can be built with a good number of detail variations, as shown in Figs. 3 to 5. In the basic astable circuit, for example, C1 alternately charges and discharges via R1 and thus has a fixed symmetry. Figures 3 to 5 show how the basic circuit can be modified to give alternate charge and discharge paths for C1 and thus to allow the symmetry to be varied at will.

The circuit in Fig. 3 is useful if you need a highly non-symmetrical waveform (such as a pulse). Capacitor C1 charges in one direction via R2 in parallel with R1, to generate the *mark* (or pulse) part of the waveform. It charges in the reverse direc-

www.americanradiohistory.com

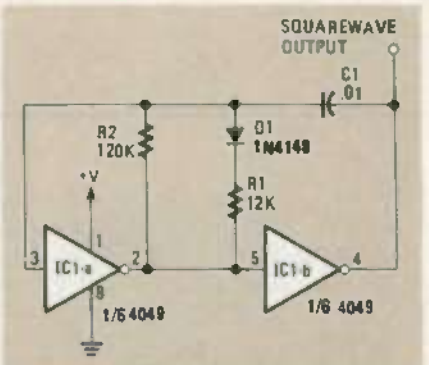

FIG. 3—YOU CAN MODIFY THE 2-gate astable to give a non-symmetrical output. The "mark" time is controlled by the parallel combination of R1 and R2. The "space" time is controlled by only R2.

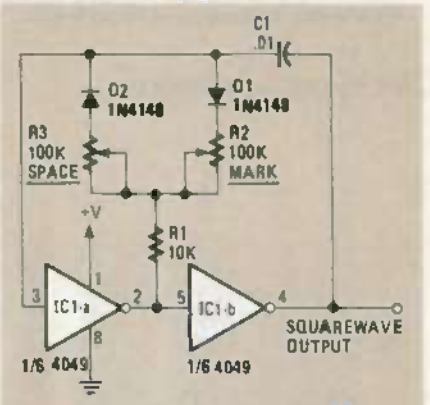

FIG. 4—THE "MARK" AND "SPACE" times can be independently varied by R2 and R3, respectively.

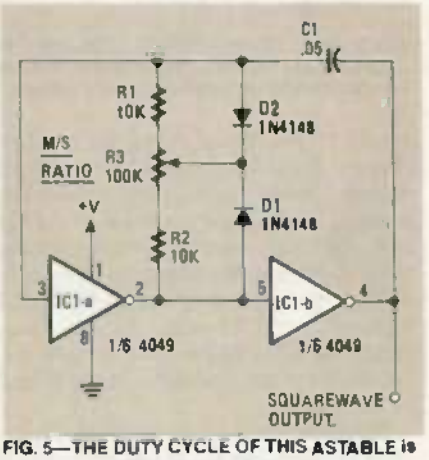

FIG. 5—THE DUTY CYCLE OF THIS ASTABLE is fully variable from 1:11 to 11:1.

tion via R2 only, to give the *space* between the pulses.

Figure 4 shows the modifications for generating a waveform with independently variable mark and space times; the mark time is controlled by R1, R2, and D1, and the space time is controlled by R1, R3, and D2.

Figure 5 shows the modifications to give a variable duty-cycle (or mark/space ratio) output while maintaining a near-constant frequency. Here, C1 charges in one direction via D2 and the lower half of R3 and R2, and in the other direction via D1 and the upper half of R3 and R1. The duty cycle can be varied over a range of 1:11 to 11:1 via R3.

Figure 6 shows a couple of ways of using the basic astable circuit as a very simple VCO. The circuit in Fig. 6-a can be used to vary the operating frequency over a limited range via an external voltage. For satisfactory operation, R2 must be at least twice as large as R1. Its actual value depends on the required frequency-shift range: A low R2 value gives a large frequency-shift range, and a larger R2 value gives a small frequency-shift range. The circuit in Fig. 6-b acts as a special-effects VCO in which the oscillator frequency rises with input voltage, but switches off completely when the input voltage falls below a value preset by R3.

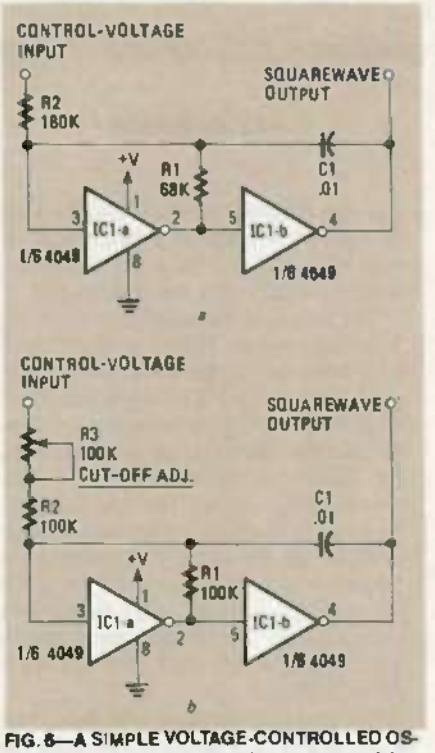

FIG. 6—A SIMPLE VOLTAGE-CONTROLLED OSCILLATOR or VCO is shown in a. Shown in *b* is a VCO that cuts off when V_{IN} falls below a value that is preset by R3.

Gated astable circuits

All of the astable circuits of Figs. 1 to 6 can be made using NAND or NOR gates instead of inverters. Simply replace the inverters with one of the gates as shown in Fig. 7.

Using NAND and NOR gates instead of inverters has a practical advantage—it lets you modify all of the circuits in Figs. 1–6 for gated operation. In other words, the astables can be turned on and off by external signals. All you have to do is to use a 2-input NAND (4011B) or NOR (4001B) gate in place of the inverter in the IC1-a position, and apply a control signal to one of the gate input terminals. By choosing the appropriate gate, you can control your astable by either a high or a low gate signal. That is shown by the two basic versions of the gated astable multivibrator in Figs. 8 and 9.

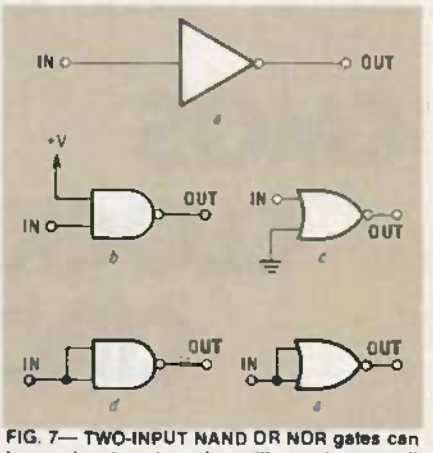

FIG. 7— TWO-INPUT NAND OR NOR gates can be used as inverters. As we'll see, they permit gated operation. As with any other CMOS IC, be sure to tie all unused inputs to one of the supply rails.

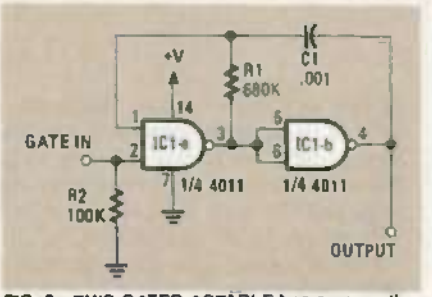

FIG. 8—THIS GATED ASTABLE has a normally-low output. It is gated on by a high input.

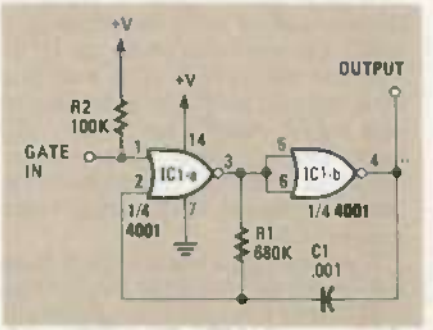

FIG. 9—THIS GATED ASTABLE has a normally-high output. It is gated on by a low input.

Note specifically from those two circuits that the NAND version is gated on by a logic-1 input and has a normally-low output, while the NOR version is gated on by a logic-0 input and has a normally high output. Pull-up (or pull-down) resistor R2 can be eliminated from the circuits if IC1-a is direct-coupled from the output of a preceding CMOS logic stage.

In the basic gated astable circuits of Figs. 8 and 9, the output signal terminates as soon as the gate drive signal is removed. Consequently, any noise present at the gate terminal also appears at the outputs of those circuits. Figures 10 and 11 show how to modify the circuits to over-

www.americanradiohistory.com

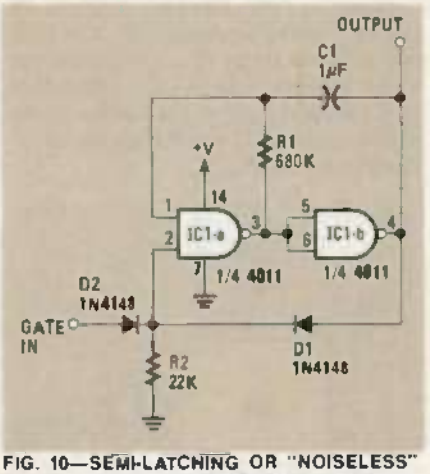

FIG. 10—SEMI-LATCHING OR "NOISELESS" gated astable has a normally-low output and is gated on by a high input.

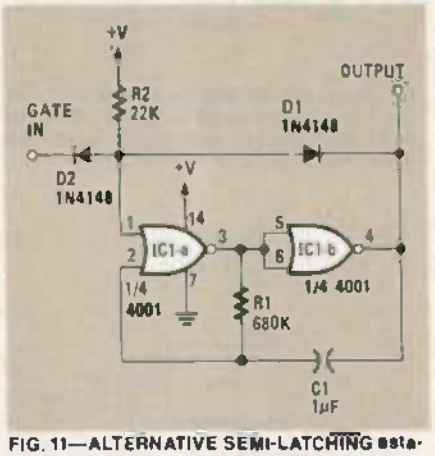

FIG. 11—ALTERNATIVE SEMI-LATCHING astable has a normally-high output and is gated on by a low input.

come that problem. There, the gate signal of IC1-a is derived from both the "outside world" and from the output of IC1-b via the diode OR gate (D1, D2, and R2). As soon as the circuit is gated from an external signal applied via D2, the output of IC1-b reinforces or self-latches the gating via D1 for the duration of one-half astable cycle. That eliminates any effects of a noisy external gate signal. The outputs of the "semi-latching" gated astable circuits are thus always complete numbers of half cycles.

Ring-of-three circuits

The 2-gate astable circuit is not generally suitable for direct use as a "clock" generator with fast-acting counting and dividing circuits. That's because it tends to pick up and amplify any supply-line noise during the "transitioning" parts of its operating cycle and to thus produce squarewaves with "glitchy" leading and trailing edges. A far better type of clock generator circuit is the *ring-of-three* astable that is shown in Fig. 12.

The Fig. 12 ring-of-three circuit is similar to the basic 2-gate astable, except that its "input" stage (IC1-a–IC1-b) acts as an ultra-high-gain non-inverting amplifier and its main timing components (R1-C1) are transposed (relative to the 2-gate astable). Because of the very high overall gain of the circuit, it produces an excellent and glitch-free squarewave output, ideal for clock-generator use.

The basic ring-of-three astable can be subjected to all the design modifications that we've already looked at for the basic

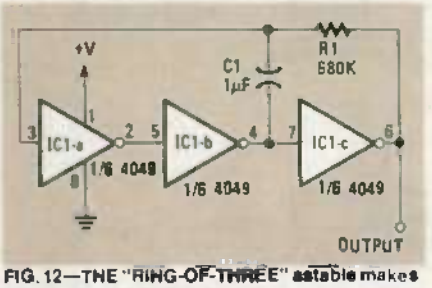

FIG. 12—THE "RING-OF-THREE" astable makes an excellent clock generator.

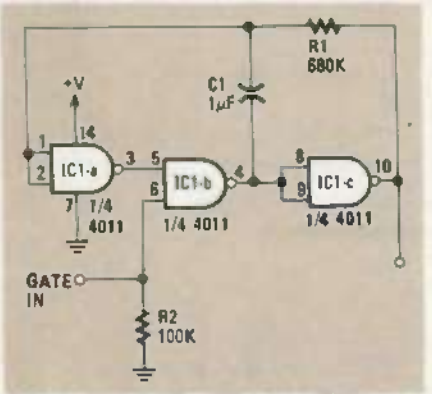

FIG. 13—THIS GATED "RING-OF-THREE" astable has a normally-low output and is gated on by a logic-1 signal.

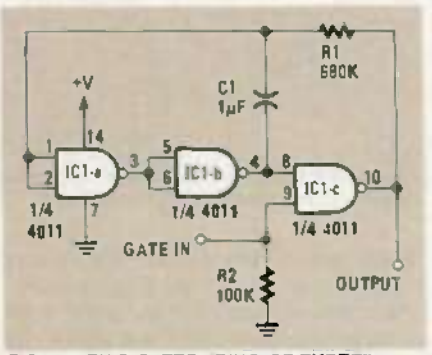

FIG. 14—THIS GATED "RING-OF-THREE" astable has a normally-high output and is gated on by a logic-1 signal.

2-gate astable—it can be used in either basic or compensated form and can give either a symmetrical or non-symmetrical output, etc. The most interesting variations of the circuit occur, however, when it is used in the gated mode, since it can be gated via either the IC1-b or IC1-c stages. Figures 13 to 16 show four variations on that gating theme.

The circuits in Figs. 13 and 14 are both gated on by a logic-1 input signal, but the

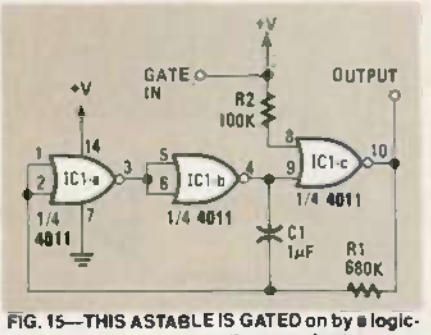

FIG. 15—THIS ASTABLE IS GATED on by a logic-0 signal and has a normally low output.

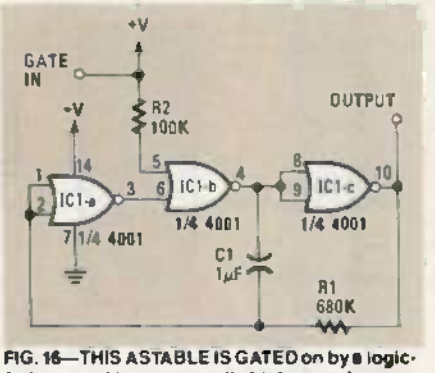

FIG. 16—THIS ASTABLE IS GATED on by a logic-0 signal and has a normally high output.

circuit in Fig. 13 has a normally-low output, while that of Fig. 14 is normally-high. Similarly, the circuits in Fig. 15 and 16 are both gated on by a logic-0 signal, but the output of the circuit in Fig. 15 is normally-low, while that of Fig. 16 is normally-high.

4046 VCO circuits

To close this look at CMOS squarewave generator circuits, let's consider some practical VCO applications of the 4046 phase-locked loop (PLL) IC. Figure 17 shows the internal block diagram and pinout of the 4046, which contains a couple of phase comparators, a VCO, a Zener diode, and a few other bits and pieces.

For our present purpose, the most important part of the chip is the VCO section. That VCO is a highly versatile device: It produces a well-shaped symmetrical squarewave output, has a top-end frequency limit in excess of 1 MHz, has a voltage-to-frequency linearity of about 1%, and can easily be "scanned" through a 1,000,000:1 range by an external voltage applied to the VCO input terminal. The frequency of the oscillator is governed by the value of a capacitor (minimum value 50 pF) connected between pins 6 and 7, by the value of a resistor (minimum value 10K) wired between pin 11 and ground, and by the voltage (any value from zero to the supply voltage) applied to VCO-input pin 9.

Figure 18 shows the simplest possible way of using the 4046 VCO as a voltage-controlled squarewave generator. In that circuit, the C1-R1 combination deter-

www.americanradiohistory.com

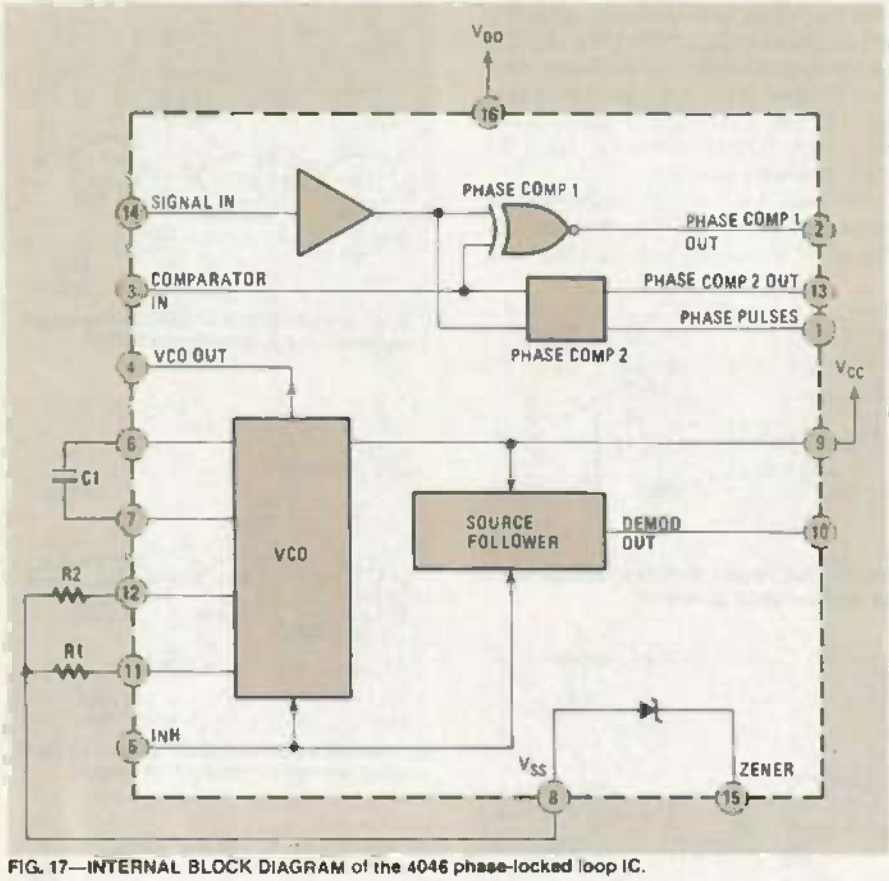

FIG. 17—INTERNAL BLOCK DIAGRAM of the 4046 phase-locked loop IC.

mines the maximum frequency that can be obtained (with the pin 9 voltage at maximum) and R2 controls the actual frequency by applying a control voltage to pin 9:

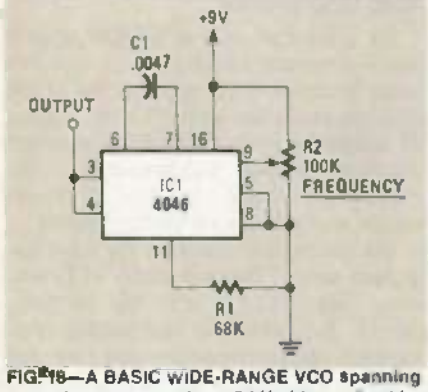

FIG. 18—A BASIC WIDE-RANGE VCO spanning from about zero to about 5 kHz (determined by R2).

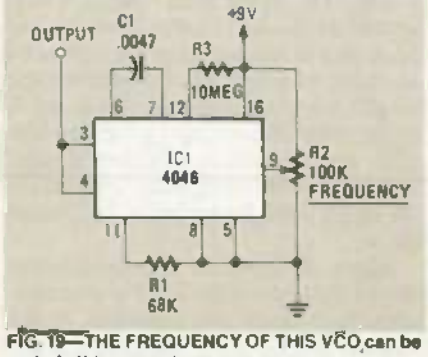

FIG. 19—THE FREQUENCY OF THIS VCO can be varied all the way down to zero.

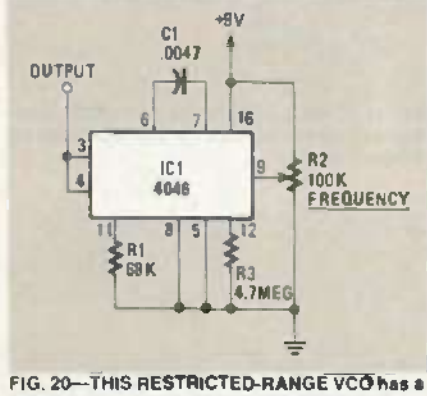

FIG. 20—THIS RESTRICTED-RANGE VCO has a frequency range from about 72 Hz to 5 kHz.

The frequency falls to a very low value (a fraction of a Hz) with pin 9 at zero volts. The effective control-voltage range of pin 9 varies from roughly 1 volt below the supply value to about 1 volt above ground, and gives a frequency span of about 1,000,000:1. Ideally, the supply voltage to the circuit should be regulated.

We've said above that the frequency of the circuit shown in Fig. 18 falls to *near*-zero when the input voltage is reduced to zero. Figure 19 shows how the circuit can be modified so that the frequency falls all the way to zero—all that's needed is a high-value resistor (R3) between pins 12 and 16. Note here that, when the frequency is reduced to zero, the VCO output randomly settles in either a logic 0 or a logic 1 state.

Figure 20 shows how the pin-12 resistor can be used to determine the minimum operating frequency of a restricted-range VCO. In that circuit, f_{MIN} is determined by C1-R2 and f_{MAX} is determined by the combination of C1 and the parallel resistance of R1 and R2.

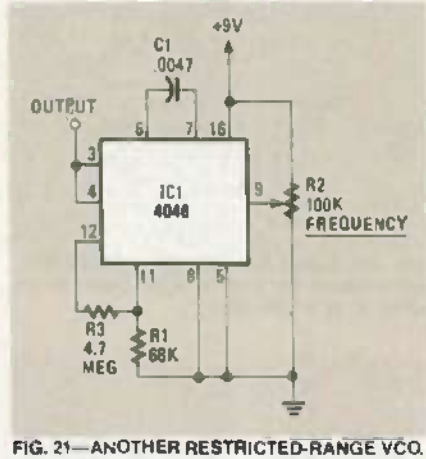

FIG. 21—ANOTHER RESTRICTED-RANGE VCO. The maximum frequency is determined by the C1-R1 time constant; the minimum frequency is determined by the time constant C1(R1 + R3).

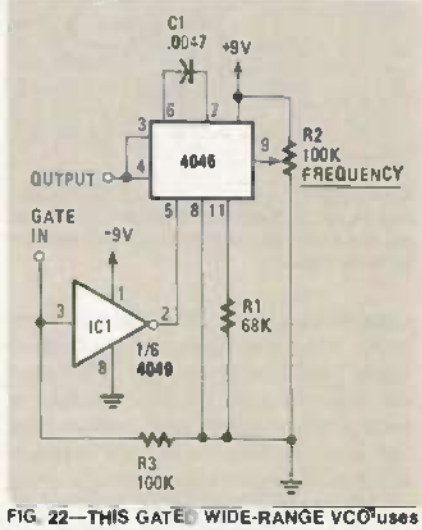

FIG. 22—THIS GATED WIDE-RANGE VCO uses an external inverter.

Figure 21 shows an alternative version of the restricted-range VCO, in which f_{MAX} is controlled by C1-R1 and f_{MIN} is determined by C1 and the series combination of R1 and R2. Note that, by making a suitable choice of the R1 and R2 values, the circuit can be made to "span" any desired frequency range from 1:1 to near-infinity.

Finally, it should be noted that the VCO section of the 4046B can be disabled by taking pin 5 of the package high (to logic 1 level) or enabled by taking pin 5 low. That feature makes it possible to gate the VCO on and off by external signals. Figure 22 illustrates that feature and shows how the basic voltage-controlled oscillator circuit can be gated via a signal applied to an external inverted stage. **R-E**

www.americanradiohistory.com

BOOKS

DIGITAL ELECTRONICS, by David Casasent; Quantum Publishers, Inc., c/o Prentice-Hall, Inc., Englewood Cliffs, NJ 07632; 7¼ × 9½ inches; softcover; 259 pages, including appendix, bibliography, and index; $9.95.

The design of digital circuits involves three somewhat separate disciplines: logic design, applications, and hardware. This text is intended primarily for a junior or senior electrical-engineering course in digital electronics; no prior knowledge of Boolean algebra, logic design, or transistor theory is required. Both differential and integral equations and determinants are avoided; the one and only mathematical prerequisite is algebra.

The emphasis is on hardware—that is, the actual design and analysis of individual logic circuits rather than the interconnection of them (logic design). That hardware flavoring is even more pronounced in the treatment of the individual gates and regenerative-logic circuits in which designs using discrete (individual) transistors, etc., are emphasized. Liberal and ample coverage of IC logic devices is included in the text. To help you understand how they work, most of the IC's are treated in rather complete detail, as if they were constructed from discrete components.

A thorough treatment of the principles and techniques covered should enable the reader to design basic special-purpose digital circuits and to use the multitude of commercially available digital integrated-circuits. R-E

Learn micro-processing with the new

MICRO-PROFESSOR 1P

Students, engineers or technicians—upgrade your micro-processing skills with the new Micro-Professor 1P.

The MPF-1P features:

- extensive software support
- more built-in memory
- improved keyboard
- larger display

Three tutorial guides help cover all capabilities. The ideal training tool! MPF-1P will deliver you into the growing world of micro-processing. Invest now!

Plus–FREE GIFT Only $179.95

☐ Check this box for FREE Z-80 Microprocessor Programming and Interfacing textbook when you order within 7 days. $12.95 value. (Include $5.00 postage & handling)

ETRONIX

Dept. RE194
14803 N.E. 40th
Redmond, WA 98052

For immediate action call TOLL FREE:

1-800-426-1044

Full money back guarantee. VISA

CIRCLE 39 ON FREE INFORMATION CARD

A QUALITY TRIPLE-REGULATED POWER SUPPLY AT A LOW, LOW PRICE!!

NOT A KIT!

MODEL PS101
FULLY ASSEMBLED & TESTED!

This DC triple regulated variable power supply has all the features you could ask for plus a full 5 year guarantee. Fully adjustable from 1½ VDC to 35 VDC! Three completely independent supplies that offer many advantages! They can be either a pos. supply or a neg. supply...they can also be stacked in series so that a 5V and two 15V supplies can total a 35 VDC supply or any combination of the three...(after one of the terminals is grounded to give it a reference)...for the first time you can now purchase this American made fully adjustable power supply at a price that is one-half of what you'd expect to pay!

$119.88

FULL 1 YEAR REPLACEMENT WARRANTY

– Made In The United States –

SPECIFICATIONS

3 outputs:
Fixed 5 VDC ± 0.2V
2 variable ≤1½ V to ≥15 VDC
Polarity – floating; can be used as pos. or neg.

Ripple less than 10mV at full load.
Regulation ≤1% no load to full load.
Line Regulation <0.2% 108 VAC to 135 VAC.

Current:
Fixed supply 1.0 amp max.
Variable supplies 0.5 amp max.

Protection built in, current limiting, with thermal shutdown.
Power: 108-135 VAC.
Dimensions: 8¼" x 3½" x 7¼" (WxHxD)
Wood grain finished metal case.
Weight: 4 lbs., 9 ozs.
Lighted on/off power switch, easy-to-read Voltmeter and large binding posts.
Warranty: one year full replacement warranty from date of purchase.

DISTRIBUTOR AND REPRESENTATIVE INQUIRIES INVITED

E.W. ENGINEERING, INC.

VISA, MASTERCARD, AMEX TELEPHONE ORDERS ACCEPTED!

6 Herman Drive, E. Granby, CT 06026 ☐ 203/651-0285

CIRCLE 81 ON FREE INFORMATION CARD

www.americanradiohistory.com

HAMEG®
Oscilloscopes

For Field Service
and Laboratory

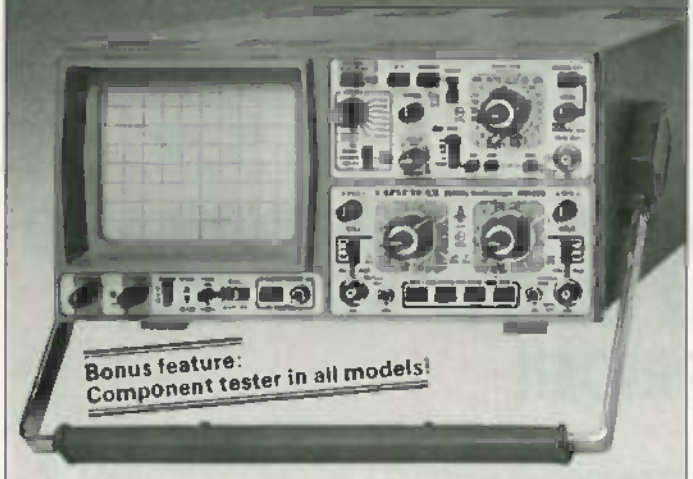

HM605 60MHz Dual Trace · US$ 965,-
Sensitivity 5mV-20V/div at 60MHz, 1mV at 5MHz • Automatic peak-value or normal triggering to 80MHz • Delay line • Variable sweep delay from 100ns-1s • Timebase range from 2.5s/div to max. 5ns/div • Unique fast-rise-time 1kHz/1MHz calibrator • Bright high-resolution 14kV CRT.

HM204 20MHz Dual Trace · US$ 758,-
Sensitivity 5mV-20V/div • 1mV at 5MHz • Timebase range 1.25s/div-10ns/div • Automatic peak-value triggering to 50MHz Delay line • Variable sweep delay • Single sweep mode • Y-Output • Z-modulation • Overscan indicator • Unique 1kHz/1MHz calibrator.

HM203 20MHz Dual Trace · US$ 605,-
Western Europe's best selling 20MHz-Scope! • Sensitivity 2mV-20V/div • Triggerbandwidth 40MHz • Timebase range 0.2s – max. 20ns/div

HM103 10MHz Single Trace · US$ 410,-
Small, compact service scope • Sensitivity 2mV-20V/div • Timebase range 0.2µs-0.2s/div • TV-V and TV-H triggering.

Modular System HM 8000
An expanding range of signal generators, multimeters, counter/timers, etc...

For more details write or call collect:
HAMEG, INC.
88-90 Harbor Road · Port Washington N.Y. 11050
Phone (516) 883.3837 · TWX (510) 223.0889

CIRCLE 45 ON FREE INFORMATION CARD

ZX81 INTERFACE

continued from page 72

try them anyway—we're sure you'll find some of them amusing.

For initial testing, you'll want the *Digitalker* to speak all of the words in its vocabulary. But if you want to use the synthesizer for serious applications, you'll need control over exactly what it says. The next program allows you to command the *Digitalker* to speak any sequence of words from the list in Table 21 so that you can program phrases or sentences. Enter the BASIC program in Table 24. Using that program, you can enter a word sequence as a series of three-digit values. All words must be represented by three digits: Any numerical value less than 100 must be padded with leading zeros. (For example, a 1 must be represented as a 0 01.) The digits are entered in a series, and delimiters are not required between the three-digit groups. For example, if you want the *Digitalker* to say "The time is 1:30," the sequence you enter is:

138139096001021

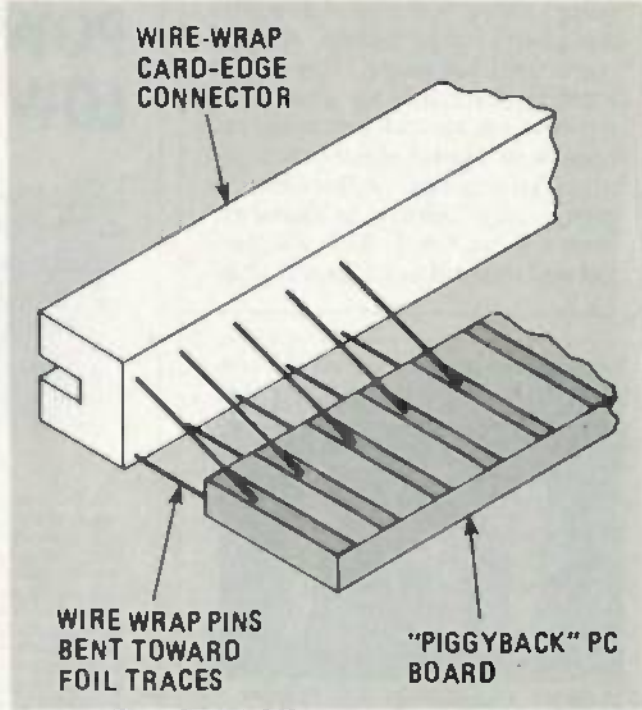

FIG. 13—THE INTERFACE CIRCUIT does not have to tie up your ZX81's port. An "extender" board will allow you to piggyback other devices to the interface.

FIG. 14—THE FOIL PATTERN for the double-sided piggyback extender board. Note that only one pattern is shown. The other side is, of course, the same.

The BASIC program divides the sequence into its three-digit word representations and sends them to the machine-language routine where the *Digitalker* is commanded to sequentially speak each word.

A piggyback connector

As you complete the interface projects we're sure that you'll discover that the 1K or 2K memory in your computer really limits

www.americanradiohistory.com

PARTS LIST—SPEECH SYNTHESIZER

Resistors, ¼-watt, 5% unless otherwise noted
R15—1500 ohms
R16—1 megohm
R17—820,000 ohms
R18—9100 ohms
R19—10,000 ohms
R20—10 ohms, ½ watt

Capacitors
C4, C5—50 pF, ceramic disc
C6–C9, C11—0.1 µF, ceramic disc
C10—20 µF, 10 volts, electrolytic
C12—0.047 µF, ceramic disc
C13, C14—.01 µF, ceramic disc

Semiconductors
IC20—74LS73 dual J-K flip-flop
IC21—74LS373 octal D-type latch
IC22—MM54104 speech processor IC
IC23—MM52164 SSR1 speech ROM
IC24—MM52164 SSR2 speech ROM
IC25—LM346 quad op-amp
IC26—LM386 audio amplifier

Other components
XTAL2—4 MHz
SPKR1—8 ohms

what you can do. To eliminate that problem, you might want to add a 16K or 64K memory pack. Both are commercially available for the Sinclair. The problem is that the interface circuit is plugged into the same slot that the memory pack must plug into. That problem can be solved by soldering a set of card-edge fingers onto the wire-wrap socket so that a memory pack can be piggybacked onto the interface circuit. Figure 13 shows how the card-edge fingers are attached to the wire-wrap socket. Figure 14 is the foil pattern for one side of the board. (The pattern for the other side is, of course, the same.)

The author of this four-part article would like to hear from any readers with interesting circuits to share, or anyone with questions regarding interfacing the *ZX81* or Timex Sinclair 1000. You can contact Neil Bungard directly at PO Box 493, Blacksburg, VA 24060 R-E

"We've added the accelerator card to the computer. Why do you ask?"

THE RIGHT STUFF.

The growth of NTE quality replacement parts has been nothing short of astronomical. And the proof is in our new 1984 Replacement Master Guide, destined to be the standard directory for technicians across the country. In excess of 3,000 quality NTE types are cross-referenced to more than 220,000 industry part numbers.

YOU'LL FIND ALL THE RIGHT STUFF FOR REPLACEMENT, MAINTENANCE AND REPAIR:

- Transistors
- Thyristors
- Integrated Circuits
- Rectifiers and Diodes
- High Voltage Multipliers and Dividers
- Optoelectronic Devices
- Zeners
- Microprocessors and Support Chips
- Memory IC's
- Thermal Cut-Offs
- Bridge Rectifiers
- Unijunctions
- RF Transistors
- Microwave Oven Rectifiers
- Selenium Rectifiers
- NEW! The Protector 6000™ Transient Voltage Protection Strip

Look for our Replacement semiconductors in the bright green polybags and cartons that list rating limits, device type, diagrams and competitive replacement right on the package. NTE quality parts are available from your local NTE distributor and come backed by our exclusive two-year warranty. Ask for your FREE NTE Replacement Master Guide and take off with NTE!

NTE

NEW TONE ELECTRONICS, INC.
44 FARRAND STREET • BLOOMFIELD, NEW JERSEY 07003

www.americanradiohistory.com

SATELLITE TV

Then and now

BOB COOPER, JR.*

WITH THE INTELLIGENCE OF HINDSIGHT, it is amusing and even instructive to look back on the rapid development of the TVRO industry since it all began in October of 1979. It was on October 18, 1979 that the FCC held a meeting and decided that TVRO (*T*elevision-*R*eceive-*O*nly) "terminals" would no longer be required to file for and receive a federal license. Until that decision, many of us had been operating our TVRO's "extra-legally." We had them, we used them, and we at least suspected we were breaking some obscure regulation or law. When the FCC decided, with great wisdom, that no further licenses would be required, a major legal impediment to owning and operating a TVRO was done away with. The industry has never looked back from that event.

But perhaps we should. Having just celebrated five years of TVRO's, I suspect there are many readers of Radio-Electronics who have had the opportunity to consider expanding their own sales and/or service business to include TVRO-system hardware. I also suspect, and in fact know, that many of the best and most qualified electronic equipment shops in the country have, in the past, elected to pass TVRO's by because of a frightening array of equipment problems and potential equipment liabilities. That will, for the next few issues of this column, be our editorial thrust; we will look at "then" and "now." Or, the way that TVRO hardware has changed since all of this began in late 1979 and early 1980, to give you both a feel for the rapid strides TVRO hardware has made in that five-year span, and to perhaps introduce you to the potentially profitable business of handling TVRO equipment as an adjunct (or featured part) to your present electronics business interests. Consumers interested in TVRO's will also find the following discussions a useful and informative way to learn about the equipment that is part of such a setup.

*Publisher, CSD Magazine

The basics

The basic TVRO system of 1984 differs somewhat from the basic TVRO system of 1979/80 because of the number of subtle (and not so subtle) advances in technology. But the elements of the system have not changed.

For example:

1) Satellite microwave energy is radiated from a satellite some 22,300 miles aboye the earth. That energy is usually (but not always) "directed" at a specific portion of the earth (known as the *boresight*).

2) On the earth, the TVRO must have a clear (not obstructed) view of the satellites of interest.

3) The TVRO dish is some form of parabolic (usually) reflector. It acts like a giant (well, large) collector, capturing the satellite's (weak) signals and re-directing them into a tight *focal point* in front of the dish.

4) There, a small antenna called a *feed* picks up the focused energy and couples it directly into a special signal-booster called an *LNA* (*L*ow *N*oise *A*mplifier).

5) The LNA amplifies the signal and sends it through a short length of "premium-grade" cable (typically RG-213/U or 214/U) to a rear-of-antenna mounted box called a *downconverter.*

6) The downconverter has a local oscillator, a mixer, and some amplifier stages inside a typically semi-weatherproofed metal enclosure. The downconverter takes the 4-GHz (3.7 to 4.2 GHz) signal and shifts it "down" to a lower frequency; 70 MHz is typical.

7) That IF signal is now transported inside (the home, office, etc.) using relatively low-cost RG-59/U or RG-6/U cable.

8) Inside, the IF signal is connected to a *demodulator* that filters and amplifies the signal and then demodulates it (turning it into pure video and pure audio).

9) The video and audio can now be used to re-modulate a low-power RF modulator with an output on (NTSC) Channel 2–6. That signal, usually under +10 dBmV (3,000 microvolts) is now connected to a standard TV receiver and you have satellite TV.

That's the basic system; then, and now. There are many, many variations to that system and we'll touch on the primary variations as we work our way through the elements.

Basically, this is what we will find. The 1979/80 TVRO was big, bulky, and expensive. The pictures were not bad by 1984 standards (some will say they may have been better than today) but the equipment was designed by the technically oriented for the technically oriented. In other words, it was not consumer-friendly. You had to be very much "into the tech-

www.americanradiohistory.com

nology" to appreciate the six to eight steps you had to follow just to change channels (*transponders* in satellite talk), or horror-of-horrors, switch from one satellite to another. Little old ladies in Dubuque were not able to operate the unsophisticated systems of five years ago.

Big has gotten small (we'll see some 4.5- and 5-foot antennas that work exceedingly well in the months ahead); bulky has gotten tiny (full receivers fit into the plam of your hand); and expensive has gotten less so, thanks to modern, often off-shore, high-production technologies. It is, certainly, an entire new ballgame for everyone involved.

But perhaps something else has happened that is even more significant, especially if you are involved in the operation of an electronics retail or service outlet. There is a new recognition that professionalism in sales and installation is perhaps more important than all of the technology advances and price declines. Customer support—always important with new technology—is starting to be seen as essential. Dealers, through a trade association and through regional groups, have finally figured out that cut-throat price cutting and selling $100 over cost is a sure path to failure. Those who have survived that recent (and still on-going) shake-out are now aware that being a TVRO dealer, or selling TVRO systems, is one of those "long-pull" businesses that rewards best those who plan for a multi-yeared future. It has finally gotten past the lure of being a get-rich-quick scheme and that may be more important to established electronic sales and service centers than all of the technology advances combined.

And much of that is due, of course, to volume. Going into the start of the summer, there were between 475,000 and 500,000 TVRO's operating in North America (including Canada). The present fall selling season was expected to see numbers such as 50,000 per month during the traditionally "up" September/November period. Some of us recall when selling 50,000 VCR's in America was big news for a single month.

Next time, we'll continue our comparison of the past and present states of satellite TV. **R-E**

TVRO dealer "Starter Kit" available

Bob Cooper's *CSD Magazine* has arranged with a number of TVRO equipment suppliers to provide a single-package of material that will help introduce you to the world of TVRO dealership. A short booklet written by Bob Cooper describes the start-up pitfalls to be avoided by any would-be TVRO dealer; in addition, product data and pricing sheets from prominent suppliers in the field are included. That package of material is free of charge and is supplied to firms or individuals in the electronics service business as an introduction to the 1984-85 world of selling TVRO systems retail.

You may obtain your *TVRO Dealer Starter Kit* free of charge by writing on company letterhead, or by enclosing a business card with your request. Address your inquiries to: *TVRO STARTER KIT, P.O. Box 100858, Fort Lauderdale, FL 33310.* That kit *not* available to individuals not involved in some form of electronics sales and service.

SATELLITE TV/
The First Five Years!

THE MOST COMPLETE report on the mushrooming home 'TVRO' industry ever compiled, written as only the 'father of TVRO' could have prepared. More than **1000 pages** (!) tracing the complete story of home TVRO, lavishly illustrated with equipment photos, schematic diagrams, equipment analysis reports. **Bob Cooper,** the first private individual to own and operate a TVRO (1976) has collected and polished hundreds of individual reports into a unique 'collector's edition' which clearly explains the TVRO phenominon in North America. From Coop's first 20 foot 'monster' dish to the present day 5 foot 'C-band' TVROs, the fascinating growth of TVRO equipment and its legal status unfolds for you.

THIS TWO VOLUME SET totaling more than 1,000 pages is available for the first time to readers of **Radio-Electronics** at special discount pricing. **Originally sold at $100** per two-volume set, a limited supply is now available ONLY through this advertisement. **PLUS,** you will also receive a special extraordinary bonus; the 200 page (+) **October 1984** edition of **CSD Coop's Satellite Digest.** This very special edition of CSD is a best-seller in the TVRO industry, with the most comprehensive collection of TVRO facts and figures ever compiled. Combined with the 1,000 page 'CSD ANTHOLOGY' report, you have instant reference to **everything** you will ever need to know about the state of the home TVRO industry. It is **MUST** reading for every person in, or thinking about 'getting into,' **any** segment of the home TVRO world.

____ **SEND CSD ANTHOLOGY/2** Vols.+CSD Bonus.
____ **SEND CSD** October '84 Special Issue **ONLY.**

NAME _____ COMPANY _____

ADDRESS _____

CITY _____ STATE _____ ZIP _____

Payment: $60 US funds (Anthology + Bonus), $15 US funds CSD Oct. ONLY; payable "CSD ANTHOLOGY."

Shipping charges prepaid. Enter order to: **CSD Anthology,** Radio-Electronics Magazine, 200 Park Av. S., New York, NY 10003; or call 305-771-0505 for credit card orders ONLY.

www.americanradiohistory.com

NEW IDEAS

Continuity tester

MAKING CONTINUITY CHECKS CAN BE A tedious undertaking, especially if you happen to be working with wire-wrap circuits. Of course, you could use an ohmeter to do the job, but continuously turning your head back and forth to read the meter can be a real pain in the neck! There is, however, a way that you can check continuity (and make sure that the resistance is less than about one ohm) without "twisting your head off." All you need do is rig up some sort of audible continuity tester, like the one shown in Fig. 1.

How it works

Power for the circuit is provided by a single 9-volt, transistor-radio type battery. At the heart of the circuit are two LF411 op-amp IC's: One op-amp, IC1, is used along with resistors R1 and R2 to form a ground reference for the circuit; in effect, producing a 4.5-volt split supply. The other op-amp (IC2) is configured as a comparator whose output used is to source current for the buzzer.

Resistors R4 and R5 form a voltage-divider that provides a reference voltage that is applied to pin 2 of IC2. The circuit to be tested is connected between points A and B via jumpers. The resistance offered by that circuit along with resistor R3 forms a second voltage divider. That leg of the circuit provides the voltage that's presented to the non-inverting input (pin 3) of IC2.

When a non-continious (open) circuit is connected across points A and B, the voltage appearing at pin 3 of IC2 will be high; therefore, its output will be high and no current flows through buzzer BZ1. However, when a continious circuit is connected to points A and B, the input to pin 3 will be low, thereby causing the output of IC2 to go low. That completes the current path for BZ1, and causes the buzzer to sound indicating a complete circuit.

Diodes D1 and D2 along with resistor R7 provide protection for the unit in the event that it is accidentally connected to a live circuit.

To calibrate the unit, connect a 47-ohm resistor at R5 and a 1-ohm unit at across points A and B. Now adjust potentiometer R5 until the buzzer just comes on. Resistor R9, which adjusts the circuit's sensitivity, should be a multi-turn, trimmer potentiometer. The maximum current through the circuit being tested will be about 4.5 milliamps.—*Ron McCabe*

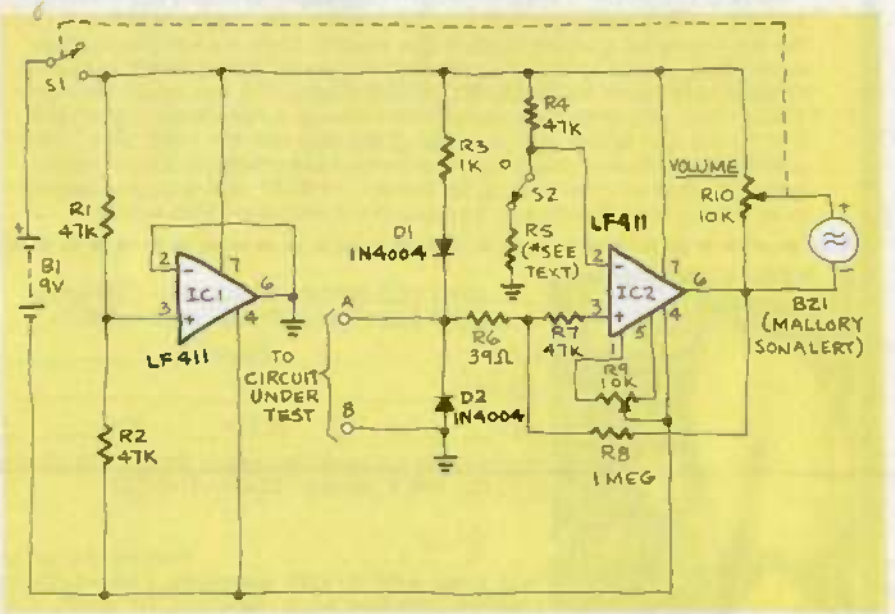

FIG. 1

NEW IDEAS

This column is devoted to new ideas, circuits, device applications, construction techniques, helpful hints, etc.

All published entries, upon publication, will earn $25. In addition, for U.S. residents only, Panavise will donate their model 333—The Rapid Assembly Circuit Board Holder, having a retail price of $39.95. It features an eight-position rotating adjustment, indexing at 45-degree increments, and six positive lock positions in the vertical plane, giving you a full ten-inch height adjustment for comfortable working.

I agree to the above terms, and grant Radio-Electronics Magazine the right to publish my idea and to subsequently republish my idea in collections or compilations of reprints of similar articles. I declare that the attached idea is my own original material and that its publication does not violate any other copyright. I also declare that this material has not been previously published.

Title of Idea

Signature

Print Name Date

Street

City State Zip

Mail your idea along with this coupon to: New Ideas Radio-Electronics, 200 Park Ave. South, New York, NY 10003

www.americanradiohistory.com

VOL. 1 No. 7 November 1984

COMPUTER DIGEST

NEW KIND OF MAGAZINE FOR ELECTRONICS PROFESSIONALS

SUPER-HIGH DENSITY FLOPPY DISK DRIVES...

How 2.5 megabytes gets stored on a 5¼-inch floppy disk.

RS-232 INCOMPATIBILITY...

Find out why your computer won't talk to your serial printer.

COMPUTER-AIDED DESIGN...

Put your computer to work designing audio networks.

A GERNSBACK PUBLICATION

www.americanradiohistory.com

BUILD YOUR OWN ROBOT!

Send today for your 52-page (8½ × 11") booklet containing complete reprints of all eleven articles in the Build Your Own Robot series by Jim Gupton.

This all-inclusive reprint gives you all the data you need to build your own Robot.

■ TELLS EVERYTHING YOU NEED TO KNOW to build the Unicorn-1 Robot without the need for an engineering degree or special equipment.

The robot is fully mobile with minipulator arms to grasp, lift and carry.

■ MANIPULATOR ARMS and end-effectors (hands) are what enable the robot to perform useful tasks. Details of construction techniques and considerations are fully explored.

■ MOBILITY BASE is not a lunar space station. It is the drive system that permits the robot to move from here to there. Full construction details along with a discussion of power sources is included.

■ THE BODY—FRAME AND ROTATION MECHANISM. This is the part that makes Unicorn-1 look like a robot. Wood and Formica are the materials for the body. Motors and gears are what make it function.

■ COMMUNICATIONS. How you can tell your robot what to do. Preprogramming techniques...radio control ....computer control are all detailed.

■ SENSORS. How to add sensors so your robot doesn't bump into things.

RE11

Radio-Electronics. Robot Reprints
200 Park Ave. South
New York, N.Y. 10003

I want to order _____ reprints @$12.00 plus $1.00 postage and handling for U.S., Canada and Mexico. Add 96¢ sales tax for New York State residents only. U.S. Funds only.
I want to order _____ reprints @$12.00 plus $3.00 Air Postage and handling for all other countries. U.S. Funds only.

Allow 6-8 weeks for delivery.

Please print

(Name) _____

(Street address) _____

(City) (State) (Zip)

We do not bill, check must be enclosed.

www.americanradiohistory.com

CONTENTS

Vol. 1 No. 7 November 1984

5 New High-Density Disk Drive
Rana's new 2.5 megabyte disk drive is explored and detailed for your information. **Marc Stern**

8 Why your printer doesn't work, Part II
In the final segment of this two-part series, we examine serial printers and how to get them up-and-running. **Herb Friedman**

11 Computer-Aided Audio Network Design
How to put your computer to work designing four different audio networks. **Frank Galdes**

ON THE COVER

The evoluation of the floppy disk is fascinating. We've gone from single-sided, single density to two-sided, double density, and now RANA introduces what appears to be the ultimate... A disk that can cram 2.5 megabytes of information into the same amount of space. To find out how they do it; **see page 5.**

ComputerDigest is published monthly as an insert in Radio-Electronics magazine by Gernsback Publications, Inc., 200 Park Avenue South, New York, NY 10003. Second-Class Postage Paid at New York, N.Y. and additional mailing offices. All rights reserved. Printed in U.S.A.

A stamped self-addressed envelope must accompany all submitted manuscripts and/or artwork or photographs if their return is desired should they be rejected. We disclaim any responsibility for the loss or damage of manuscripts and/or artwork or photographs while in our possession or otherwise.

COMPUTER DIGEST

Hugo Gernsback (1884-1967)
founder
M. Harvey Gernsback, editor-in-chief
Larry Steckler, CET, publisher
Art Kleiman, editorial director
Byron G. Wels, editor
Brian C. Fenton, technical editor
Carl Laron, associate editor
Robert A. Young, assistant editor
Ruby M. Yee, production manager
Robert A. W. Lowndes, production associate
Dianne Osias, production assistant
Karen Tucker, production assistant
Jacqueline Weaver, circulation director
Arline R. Fishman, advertising coordinator

Gernsback Publications, Inc.
200 Park Ave. South
New York, NY 10003
Chairman of the Board:
M. Harvey Gernsback
President: Larry Steckler

ADVERTISING SALES 212-777-6400
Larry Steckler
Publisher

EAST/SOUTHEAST
Stanley Levitan
Radio-Electronics
200 Park Ave. South
New York, NY 10003
212-777-6400

MIDWEST/Texas/Arkansas/Okla.
Ralph Bergen
Radio-Electronics
540 Frontage Road—Suite 325
Northfield, Illinois 60093
312-446-1444

PACIFIC COAST
Mountain States
Marvin Green
Radio-Electronics
15335 Morrison St., Suite 227,
Sherman Oaks, CA 91403
818-986-2001

www.americanradiohistory.com

COMPUTER PRODUCTS

For more details use the free information card inside the back cover

PLUG-IN INTERFACE ADAPTERS, the Apricom *Parallel Interface Adapter* (shown in photo) and the Apricom *Asynchronous Communications Adapter* are compatible with the IBM *PC/XT* and work with all operating

CIRCLE 111 ON FREE INFORMATION CARD

systems and software packages available for the IBM-PC and IBM-XT. Each card is fully burned-in and tested, and is backed by a lifetime warranty.

The *Parallel Interface Adapter* creates a parallel I/O interface accessible through a connector at the rear panel of the computer system, providing control of numerous printers with parallel (or Centronics) type interfaces.

The *Asynchronous Communications Adapter* provides a fully programmable RS-232 serial interface for communication with a variety of devices, including printers, modems, terminals, other computers, and plotters.

Both boards carry a suggested list price of $119.00.—**Apricom,** 7050 Convoy Court, San Diego, CA 92111.

MULTI-CHANNEL SWITCH/SPOOLER model *SX-60* serves up to four computers and feeds two printers simultaneously. Any of the four input computers can direct its outputs to either of the printers. All switching is under software control.

Spooler buffer sizes of 8, 32, or 64K store from 2.5 to 20 pages of dense, single-spaced text. For busy installations, an expansion board can increase the spooler's buffer capacity to 384K, 120 pages. Standard configuration is four computers in, two printers out, or two printers in, four printers out. Using jumpers, the model *SX-60* may be configured for 5 in, 1 out; 3 in, 3 out; or 1 in, 5 out.

The model *SX-60* will accept serial data on each channel from 150 to 19,200 baud with each computer at a different baud rate. Printers also may be set from 150 to 19,200 baud with each printer at a different baud rate—for example: a letter-quality printer at 2400 baud and a dot-matrix printer at 1200 baud. A variety of serial-serial

CIRCLE 112 ON FREE INFORMATION CARD

and parallel-serial combinations are available. All conections are made through 25-pin D connectors at the rear. A copy function is provided for multiple copies of documents.

Prices for the model *SX-60* start at $469.00.—**Kearsarge Industries, Inc.,** Reston, VA 22091.

Check These FANTASTIC BUYS

Join our over 50,000 Satisfied Customers

DEX 4100 FACSIMILE (FAX) MACHINES

Ideal for Experimental Page Scanner or Low Cost Copier

Found in offices everywhere, these units can transmit & receive to and from other Standard Telecopier Machines over standard phone lines. Transmits documents and photos. Features auto feed of originals, built-in roll feed, page cutter for automatic sizing & "photo" mode for the grey scale & halftones.

OPERATIONAL!

$169.00 ea.

PARALLEL, TTL INPUT I/O "SELECTRIC"

TYPEWRITER/PRINTER These machines have built-in driver and decoder circuitry and take TTL level 6-bit character, plus a 4-bit function input signals. Easily driven by most any micro. Use as a typewriter (with add'l "repeat" circuitry) or as a KSR I/O printer or both. "Table Top" style case.

Only!! $299.00 ea.

TESTED AND OPERATIONAL!

SHUGART SA-400 "MINI-FLOPPY" DRIVES

Model SA-400, used, whole, untested, less power supply & case. Data and schematics included. Removed from Equipment.

Only!! $99.00 ea.

UNUSED

SSDD, DUAL MINIDISKETTE DRIVE

w/supply & 2 TEAC ...(w/SA-400 interface) Mini-Floppy Drives in DEC case. Made for Digital Equipment Corp. Incl. Pwr Supply, Case.

Only!! $299.00 ea.

G.E. "TERMINET 1200" FEATURING:

110, 300, & 1200 Baud (11, 30 & 120 cps), full KSR & RS-232-C I/O, compact, table-top configuration, upper & lower case continuous band, made in USA by General Electric, tested and operational.

Only!! $349.00 ea.

120 CPS! RS-232

Prices do not include packaging and shipping.

Write or Call for Our Latest Flyer NOW!!!

"Selectric" is a registered trademark of IBM Corporation

Computer Products & Peripherals Unlimited

WAREHOUSE 18 Granite St. Haverhill Mass 01830
MAIL ORDERS Box 204 Newton New Hampshire 03858

617/372-8637

Sorry No Collect Calls
MasterCard & VISA Accepted

CIRCLE 68 ON FREE INFORMATION CARD

www.americanradiohistory.com

NEW HIGH DENSITY DISC DRIVE

Fig. 1—THE RANA 2.5 SUPER FLOPPY-DISK SYSTEM is capable of storing 2.5 megabytes on a 5¼ inch floppy diskette. It ushers in a new era in high-density storage devices.

Here's more storage power for your computer.

MARC STERN

At last, a floppy-disk-drive manufacturer has broken the 2-megabyte barrier. Rana Systems has developed a floppy-disk-drive that interfaces with the IBM *Personal Computer* and IBM-PC *XT*. Called the Rana 2.5 *Super Floppy Disk System*, this super high-density storage device is capable of storing 2.5-megabytes of formatted data (3.3 megabytes unformatted) on a single 5-1/4-inch floppy diskette.

The *Super Floppy*, which, according to Rana has been in development for 2½ years, takes advantage of microprocessor control and LSI (*Large-Scale-Integration*) techniques. The head-movement commands are under the control of a closed-loop servo system.

The Rana drive

Rana developed their *Super Floppy* system in conjunction with Drivetec. The read-write heads—there are two—are made of manganese zinc ferrite and are mounted on a carriage which is located on precision guide rods that insure accurate radial motion. Head positioning is accomplished on a closed-loop basis, using servo data recorded between each sector of the (pre-formatted) diskette.

A special disk-controller card, which fits into one of the IBM-PC's expansion slots, is required. It communicates with the microprocessor via the IBM system bus and replaces the standard IBM disk-controller cards. This card will support up to four drives. For instance, a PC user can have two standard, 360K floppy-disk drives installed and 2 Rana *Super Floppy* drives.

The drive itself uses two stepper motors, which work in concert with the drive's controller circuitry, to correctly position the read-write heads. The first motor is a coarse stepper and finds the particular track—there are 160 per side—while the second motor is a fine stepper which brings the read-write head to the correct sector. It must maintain an accuracy of 200-microinches.

The direct DC drive motor is on continuously. The acquisition time for data loading is 35 milliseconds; track-to-track access time is 0.3 ms. The direct-DC drive motors "come up" much more quickly than AC units.

A brief walkthrough

A standalone unit, the *Super Floppy*, is a good example of the super high-density units now appearing

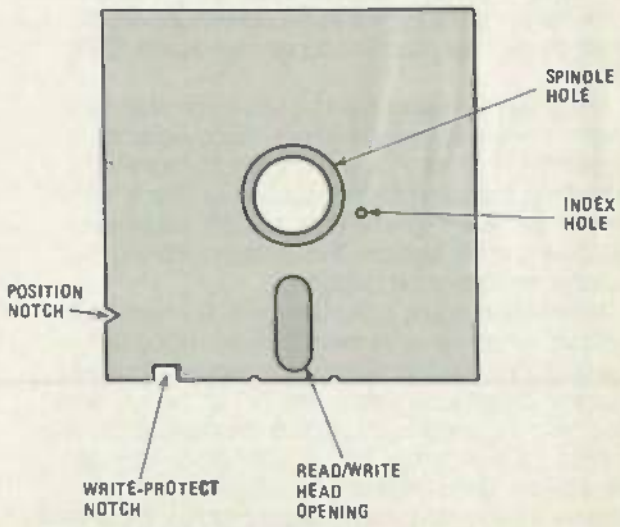

Fig. 2—AN ORDINARY DISKETTE shows the notching that we are all familiar with. Compare this with Fig. 3.

www.americanradiohistory.com

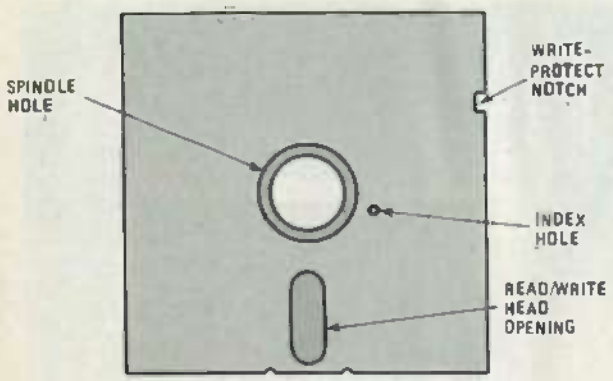

Fig. 3—THE RANA DISKETTE has entirely different notching. This means that you cannot substitute an ordinary diskette in the Rana drive.

on the market. When the power is turned on, the drive remains inactive until a diskette is inserted and a special latch at the front is closed, at which time, the drive's center spindle comes up and centers the diskette. A cone drops as the motor comes on and runs continuously at 360 rpm (the standard 8-inch floppy-disk rate). Optoelectronic circuitry reads a special notch in the diskette to ensure that it has been positioned properly (See Figure 3) and the drive further checks other position-sensing circuitry at the spindle to ensure that the diskette remains centered. A user can't remove the diskette because the latch locks the diskette into place. The latch must be opened before the diskette can be removed.

As the diskette spins, the read-write heads, which are controlled by intelligent LSI circuitry, look for Track 0 and look for bad sectors on the diskette. If the diskette is bad, it indicates that to the system board, which, in turn, gives the user an error message.

Diskette is the key

Besides the special LSI positioning circuitry and dual-stepper motors, the real key to the super high-density disk drive is the diskette itself. Although it is a 5¼-inch minifloppy and looks much like any other 5-1.4-inch foppy, there are some differences which make the diskette used in a super-high-density drive unique.

If you look at Figures 2 and 3, you'll see what we mean. In Figure 2, a garden-variety floppy diskette is shown. As you look at it, you'll notice the read-write notch is at the top right; the positioning hole is to the right of the center spindle hole, and the read-write window is at the bottom. Two more positioning notches are also at the bottom.

Now look at Figure 3, the Rana disk. The read-write (also known as the write-protect) notch is located at the bottom to the left of the read-write window. And, a special positioning notch—the "V" on the left—has also been included to ensure that the diskette is in the correct position before the heads begin to look over the diskette. Optoelectronic circuitry reads this notch. That means you can't use a standard floppy in the Rana drive. Instead, you must use one supplied by Rana, which costs about $15, at the moment. (Rana officials expect the price to drop to about $8, when more super high-density drives appear on the market.

In reality, these super high-density disks are quad-density storage diskettes. Using modified frequency modulation (MFM), as many as 160 tracks of information can be laid down per side. (Single-density disks use one recording head and 36 to 40 tracks. Double-density disks use one recording head, modified frequency modulation, and effectively double the amount of information capability, and quad-density disks use both sides and double the number of tracks per side. Double-sided, double-density disks use both sides, but have only 40 tracks per side, while quad-density disks have 80 tracks, effectively doubling the amount of information capability. The key to the ability to double the information capacity with recording technique relies on the type of modulation used. With standard FM techniques, a certain amount of timing and address data is stored along with the digital data. Each byte of data on the disk not only has digital information, but also timing and address information. With MFM, only digital and address information is stored, effectively freeing a great deal of space for further information storage. Timing is supplied by read-write head intelligence.)

Servo Information

Equally as important as the disk media and recording technique is a method of storing positioning information on each super high-density disk. Rana calls this information the "servo" information and stores it in between each sector along a track. (Rana uses 17 sectors per track.)

In operation, the disk read-write head interacts with this servo information for precise head positioning. It reads the positioning data in each sector and finds the ones which hold the file of data or program the user asks for.

The servo information is preformatted on each diskette supplied by Rana and this is the reason you must buy the diskettes from them or their dealers. The servo information, which acts as header data for the read-write head, lies before the sector ID header on each track (See Fig. 4.)

In operation, the read data is decoded and the servo data is presented to two electronic devices. The first does a digital identification of the servo patterns, while the second compares the amplitude of the left and right servo signals and repositions the stepper motor toward the center line of the recorded data.

The read-write head constantly looks for servo data on the disk and constantly updates itself and repositions itself. Special circuitry also compensates for thermal and humidity-related expansion or contraction of the diskette and for other mechanical tolerances of the drive.

A little history

If you've been a personal computer user for more than a couple of years, you probably remember the first disk drive you purchased. Think about it for a couple of minutes. When you purchased that first disk

www.americanradiohistory.com

drive for your first personal computer, it was probably a "state-of-the-art" storage device, capable of holding about 90K of data. It made no difference whether your system was an Apple, a CP/M machine, or one of the Radio Shack computers: The amount of storage was probably about the same, give or take a few thousand bytes.

It all seems an age-and-a-half ago, but it really wasn't. Single-sided, single-density disk drives were the standards of the industry as recently as three to four years ago. That type of disk drive—still used by many computer owners—had a storage capacity that was limited not only by its format, typically 36 to 40 tracks, but also by the method used to store data on the disk.

With a single-density disk drive, each range of frequencies that's recorded represents not only the data, but also certain timing and address information which enables the computer to find specific files or data on the disk. That manner of encoding data on the disk effectively limited the amount of data which could be stored to about 90,000 bytes of usable space.

However, new ways to cram more data onto storage disks were found. An example is modified frequency modulation or MFM. Using that technique, which strips away the necessity of using a constant clock pulse for timing information, the amount of data that could be stored on a diskette was effectively doubled.

Still designers weren't content and they saw a vast wasteland on the unused side of the disk. So they included a second read-write head opposite the already-existing read-write head and effectively doubled the disk capacity again.

However, the number of tracks remained the same. Each side of the disk had only 40 tracks, or 80 tracks total. The reason this number remained the same is because the technology didn't exist to increase the number of tracks and add even more storage. Like the car industry's downsizing program where the first gains—cutting weight—were easy because all they had to do was substitute materials, the early gains in mass storage were fairly easy because all that had to be modified was read-write technology. When it came to further gains, more-elaborate circuitry, some of which hadn't been developed in 1981, had to be created.

Until this time, there was a fair amount of leeway in read-write head positioning because the requirements weren't as critical as might be. Potentially, a 5¼-inch floppy disk could store far more than just 360K but any increase in the amount of storage couldn't be reached because the head positioning required was far too critical.

But, disk drive designers weren't about to let that stand in their way. They continued their work until they were able to lay down double or more the number of storage tracks on the disk. Thus, the 40-track disk became the 80 to 96-track disk and, as a result, the amount of information that could be stored increased by a factor of two and disks could store as much as 720K of data. These quad density disks were state-of-the-art until disk drive developers moved toward the 1 megabyte barrier.

Disk drives from such companies as Amlyn, Tandon and Rana use precise positioning servos and super-precise positioning circuitry to achieve information densities as high as 2.5 megabytes of storage, and have reached a new plateau in floppy disk storage technology.

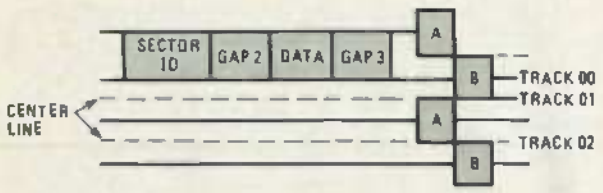

Fig. 4—SERVO INFORMATION acts as header data for the read-write head. It lies before the sector ID header on each track.

What it means

The advent of the super high-density disk has several advantages for the microcomputer user. First it is a good way point in the seemingly inevitable trek to a hard disk and, second, when you reach the hard disk, it is a good backup device.

At one point or another in the life of every microcomputer user, there comes a day when ordinary floppy disk drives just aren't enough, for whatever reasons, whether business, professional or personal. Quite likely, this point is reached where several programs are used frequently and different data files are accessed in succession.

Using floppy disk drives, at this time, can become torture because you must constantly switch disks to change programs or data disks.

At this time, the small-computer user probably wishes he had a hard disk drive to accommodate at least his highly-used programs and files, especially because of the high-density storage potential and because of the speed of program or data access. Hard-disk drives spin at 3,600 rpm and information on them literally leaps onto the screen.

However, the user also probably can't justify a hard disk on the grounds of expense, so he must remain with a dual-drive system.

Super high-density disks solve this quandary because they offer prodigious amounts of storage and are less expensive than hard disk drives. So, this type of drive is a good way point in the move to the hard drive.

Unless the computer user is willing to invest in a costly streaming tape cartridge drive, then he must back up his hard disk with floppy diskettes. On the IBM PC, that will take about 28 standard diskettes and require the better part of an afternoon. With a super high-density disk, however, it takes only four diskettes to back up the hard disk and it's a much speedier proposition. The super high-density disk has a transfer rate of 500 kilobits per second.

So, from many viewpoints the super high-density disk makes sense. It's only a recent development, but it's likely the rest of the industry will soon follow suit.

www.americanradiohistory.com

PRINTER PROBLEMS II

Last month we examined parallel printers. Now serial printers come under the spotlight.

HERB FRIEDMAN

■More often than necessary, the best of intentions lead to even greater problems, frustrations, or outright disasters. The *RS-232C serial printer interface* is a classic example of how to make something that is inherently simple into something so complex that it is often beyond the ability of non-technical users.

How teletypewriters work

The original teletypewriters were mechanical marvels, that used the interruptions in a closed circuit—a current loop—to exchange information between several machines or printers. As shown in Figure 1, the teletypewriter consisted of two completely independent devices—a keyboard and a printer—though both units were generally housed in the same cabinet. The complete teletypewriter, consisting of a keyboard and printer was called a KSR—for Keyboard Send Receive. If the printer was housed in its own cabinet, it was called an RO—for Receive Only.

The loop current—called the *mark* (standby) current—was provided by a power supply or batteries. Depressing any key on the keyboard caused the motorized keyboard machinery to produce an interruption to the current loop—called a *space* which all machines in the loop recognized as the "start" signal for the next character. The time period used for the space interruption to the current was called a "bit." (It had nothing to do with the binary code.) Following the space, the machinery produced a series of five bits consisting of marks and spaces which represented characters. Each character was represented by its own specific pattern of marks and spaces, which the printers recognized as the character to be printed.

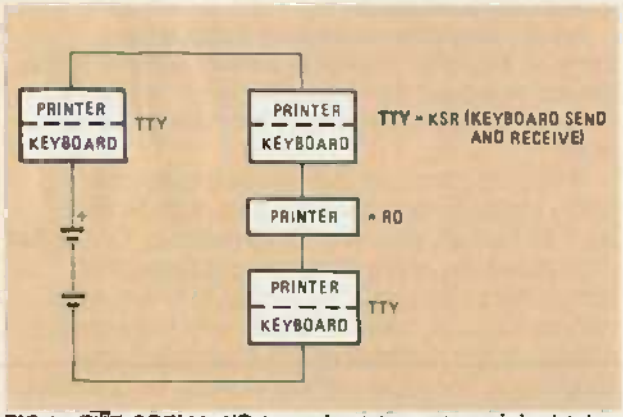

FIG.1—THE SERIAL I/O is derived from the original teletypewriter system, in which all elements were connected in series and responded to serial loop current interruptions that represented characters and control functions.

The bit timing is extremely critical. If the space and character bits weren't transmitted within a specific time period, the printing mechanisms got out of synchronization and produced random characters—"garbage." To insure that all machines started and ended together, after the five *character bits* were transmitted, the keyboard returned the current loop to the marking state (current flow), which the printers recognized as the "end of character" and "standby" for the next character. Because of "slop" (tolerances) in the mechanical system, the minimum length of time for marking current before the next character was started was standardized at the equivalent of 1.5 or 2.0 times the bit length. This was enough time for the machine to get ready to receive the next character. The time required for all the bits necessary to transmit one character—the start, character and stop bits—is called the *frame*.

Reliability

In order to transmit both upper and lower case characters and to provide for a quick-and-dirty way to test the reliability of the transmission, the number of character bits were eventually increased to eight: seven bits to produce the ASCII character set and control codes, and one bit—called the *parity bit*—for testing the reliability of the communications path. (Later, instead of the eighth bit being used to indicate parity, it became part of the character code for transmitting or printing graphic symbols.)

The mainframe computer and teletypewriter terminals that connected to a computer via modems were essentially a *communications system*. The same is true for the printers driven by modems which could print information originating at a mainframe computer or a KSR TTY terminal. (For example, many doctors had RO units (printers) that connected through a modem and a dedicated telephone line to a medical laboratory. Test results from a patient's blood samples—which had been sent to the laboratory—were instantly transmitted to the printer in the doctor's office.)

Notice that in every instance, except when the terminal is connected directly to the computer, there is

www.americanradiohistory.com

a modem before or after the TTY device—the whole system is meant for communications.

The RS-232C I/O is born.

While effective, the current loop was unweildy and lacked hardware handshaking, and so an "industry group" came up with the RS-232C I/O, an electronic replacement for the current loop. RS-232C substituted variations in a DC voltage level for the current loop and also provided special DC voltages for hardware handshaking, a means whereby one item of equiupment knows if another is turned on or ready to accept data, or capable of transmitting.

But the RS-232C standardization was meant for the mainframe—or dinosaur—age of computing, and so RS-232 was designed for communications. Its connections—shown in Table 1—are entirely communications-oriented.

TABLE 1

TERMINAL	NAME	FUNCTION
1	HGND1	Hardware Ground (often not used)
2	TX	Transmit. Data fed into modem or DCE device from computer or terminal.
3	RX	Receive. Data received by modem from the telephone line (to printer or terminal).
4	RTS	Request to Send (from DTE)
5	CTS	Clear to Send (DCE device ready)
6	DSR	Data Set Ready (DCE device ready)
7	GND	Common signal ground
8	CD	Carrier detect (Modem received carrier)
20	DTR	Data terminal or DTE ready
22	RD	Ring detector. (For auto-modems)

Even for communications, there is a serious problem. When using a current loop, anything connected into the loop will work as long as the *framing* is correct. Every printer in the loop will simultaneously print whatever is entered in a keyboard, and any keyboard can enter a character into the loop. But an electronic circuit using variations in DC voltage level must have seperate send and receive circuits. For example, if RS-232C terminal #2 is input, it's input for every piece of equipment, while terminal #3 is output for every piece of equipment. If terminal #2 of the keyboard is connected to terminal #2 of the printer, absolutely nothing will happen. In order to print, terminal #2 of the keyboard or modem (the output) must connect to terminal #3 (the input) of the printer.

Standards again.

This was understandable by everybody, but there are always people who believe "standards" should be standard even if they don't work. Since it was impossible to have a single set of connections serve as a "standard," the group created two sets of RS-232C connections: One called DCE for *Data Ccommunications Equipment*, the other DTE for *Data Terminal Equipment*. And the DTE connections mated with the DCE. Anything remotely resembling terminal equipment was considered DTE; anything that originated or passed data into or from a telephone line was considered DCE. A modem, being DCE, could be connected directly to a printer, which was DTE. Unfortunately, none of the connections allowed for the personal computer, and it is this lack of foresight that creates some of the worst interfacing problems with personal computers.

Consider this situation: Your computer has one serial I/O which is used for both the printer and the modem. Since the modem is DCE, the computer's serial must be DTE. Then what is the printer? DTE or DCE? By convention, a printer is DTE because it is meant to be fed by the modem. But we feed printers from personal computers. If the computer's output is DTE in order to drive the modem, it can't drive the printer, which is also DTE.

The hardware handshaking of the DTE computer is also intended for the modem; it expects to see a positive handshake voltage on terminals #4, #5, #6 or #8, or a combination of terminals, when the modem is ready to accept data. This is the exact opposite of what the printer needs because the printer was originally intended to work with the modem in place of the computer. The printer does not need a hardware handshake because it originates the handshake for the modem, or the printer provides a software handshake through pin #2. But if both the computer and printer are providing a handshake on the same terminals neither will know what's going on.

All this—the result of poor compromises and some manufacturers who seemingly go out of their way to make serial connections as difficult as possible—is the reason why what should be a simple printer-to-computer connection becomes a week-long nightmare.

Get the handshake right.

On the other hand, there are a few manufacturers, such as Smith-Corona (printers) and Kaypro and Radio Shack (computers) who go out of their way to make serial interfacing as uncomplicated as possible. For example, Smith-Corona's serial connections use the #20/#4 hardware handshake, meaning, that if you connect the printer's #20 or #4 terminal to the #20 or #4 terminal of any computer's serial I/O *intended for printers* it's all going to work. The serial printer I/O of Radio Shack's *Color Computer* is even easier. There is one single terminal that will work if connected to any printer handshake. Then there is IBM *PC* and its clones, which expect to see a modem connected to the serial I/O. If you use a printer, you must prewire the connections so the computer thinks it's connected to a modem. (Regardless what kind of connections are made between the computer and the printer, keep in mind that handshake polarity must be observed. Some printers provide for either a positive or negative handshake. Know what your computer needs and what the printer delivers before you buy.)

Table 2 shows some of the unusual wiring problems you may run across. All three computers, the IBM *PC*, the Kaypro *II* and the Texas Instruments *Professional* have RS-232C I/O intended for a modem, yet note how all three connect differently to a standard printer's

www.americanradiohistory.com

TABLE 2

IBM PC TERMINAL NO.	SERIAL PRINTER TERMINAL NO.
2	3
3	2
7	7
5	20
6, 8, 20	6

KAYPRO II TERMINAL NO.	SERIAL PRINTER TERMINAL NO.
2	3
3	2
5	20
6	4
7	7
20	6

T.I. PROFESSIONAL TERMINAL NO.	SERIAL PRINTER TERMINAL NO.
2	3
3	2
4-5 (short)	NC (No Connection)
6	20
7	7
8	4
20	6

RS-232C input (Diablo 620). Essentially, the connections trick the computer into thinking it's connected to a modem rather than a printer.

Getting it all together.

Any one mistake in serial interfacing, from the number of characters, stop or total bits, to the signal or handshake connections, can stop your printer cold—or cause it to print "garbage." But if you initially set up the printer in a specific order, giving attention to what appears to be the most insignificant details, you should be able to have it running at the first try. Just keep this one fact in mind at all times—regardless of the variations in connections, labelling or whatever, if *the printer* employs a DB-25 connector terminal #3 is always the data input. Do not get confused by DCE, DTE or any other nomenclature. If the printer was intended to work with a personal computer, it's looking for data on terminal #3. If it has a hardware handshake it's either #4, #20 or both, with the user selecting the one to use. If it has a software handshake (ETX/ACK or X-on/Xoff) the handshake comes from terminal #2. (There might or might not be other connections.) Inexpensive serial printers can generally work with only a three-wire connection; signal, ground and handshake.

First things first.

Serial printers have switches or a patch panel (small jumpers) that set the various parameters and functions. You must set them for the printer's baud rate and character bits. Baud rate is no problem: the computer's manual specifies the output baud rate or tells you how to program the computer for the desired baud rate. The number of character bits is something else. If the computer's serial output is programmed for eight bits, even if it is only using seven bits per character the printer must account for all eight bits. In some printers, if seven character bits are programmed, the eighth bit is always a parity bit: either on or off, but there is either a mark or space bit to fill the void. on the other hand, some printers don't recognize the eighth bit if the parity isn't specified as *even* or *odd*: if not specifically programmed for the eighth bit, the printer looks only for the seven bits between the start and stop bits. This throws the framing off and after the first or second character the printing is "garbage." You can never go wrong if you account for the parity bit. If the computer is specified as "seven bits no-parity" you must set the printer for 7 bits + parity off (8 bits total). You cannot add 7 + "no parity" and assume it equals 8 bits. Parity off on a 7 bit printer is a forced space or mark, the printer doesn't care which as long as the stop bit(s) follow at the correct time.

If you think this is confusing, some of the serial interfacing for a very popular computer as given in the set-up manual of a famous, highly-rated printer has been wrong in every printing. What generally happens is that after many futile hours of effort, the user telephones that printer manufacturer's service department and finally gets the correct switch settings over the phone. (No, I will not embarass them by mentioning names. The parity bit problem has happened to the best and worst of printer manufacturers.)

Part of the framing includes the stop bit(s). Normally, above 110 baud only one stop bit is used. However, there are computers that use two stop bits (the Radio Shack *Color Computer* is one of the more popular). Normally, the modem printer will function with only one stop bit because it frames only the first stop bit and accepts the voltage transition that takes place with the following start bit (the space) as the beginning of the next character. On the other hand, a few printers frame to the second stop bit, and you *must* set the computer to provide two stop bits.

The hardware handshake.

Except for an unbelievable blunder by one of the major foreign manufacturers, the serial hardware handshake for a printer with a DB-25 connector is always printer terminal #20 and/or #4: Usually, it's only #20. Software handshaking—the ETX/ACK or DC1/DC2 (which is also called X-on/X-off)—is always through printer terminal #2.

If your computer's RS-232C is specifically wired as a printer port (DCE) you simply bring the signal and handshake wires straight across, #2 to #2, #7 to #7, #20 to #20, etc. If the computer has an RS-232C I/O which is wired for DTE for connection to a modem, but which is software programmed for a printer, you have big trouble because the wiring at the computer's connector can vary from model to model.

Depending on the particular printer and computer being used, some of the connections might not be required or even exist. That's when the going gets sticky. Unless you have the detailed connections for a particular combination of printer and computer, you might never get the printer working if the computer does not have a true RS-232C printer I/O. Contact the manufacturer of the printer if you have any doubts. They usually can give you the connections over the phone.◀◍▶

www.americanradiohistory.com

COMPUTER-DESIGNED AUDIO NETWORKS

This program eliminates the hard work in designing impedance-matching networks and attenuators for audio systems.

FRANK GALDES

■Ever since the early days of the telephone, attenuator networks have been used to control sound levels and to match impedances. Technicians, hobbyists, and experimenters who work with audio equipment and circuitry often find that a particular piece of equipment has an input (or output) impedance or line level that does not meet their requirements. In many of those instances, a commercially manufactured attenuator network is not readily available to solve the problem. Of course, you don't need a commercial network—you can put one together yourself.

Only four networks—the T, H, L, and U—will be considered. The T network consists of three resistors connected in the form of a "T," as shown in Fig. 1-a. It is an unbalanced attenuator. When used between circuits of unequal impedance, it is often called a taper pad. The H-type attenuator is a balanced T pad. It consists of 5 resistors connected in the form of an "H," as shown in Fig. 1-b.

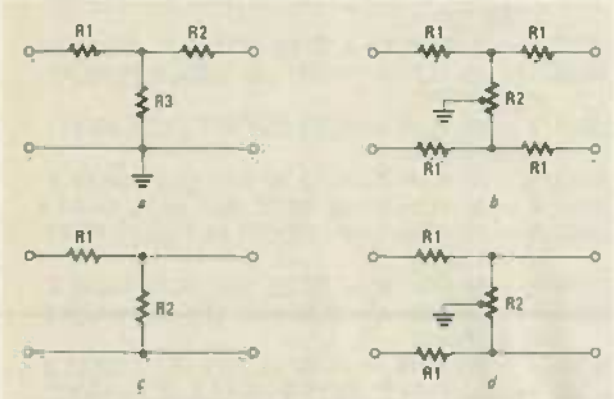

FIG. 1—THE FOUR ATTENUATOR TYPES that the program will help you design. Shown in *a* is a T attenuator, in *b* is an H-type, in *c* is an L-type, and in *d* is a U-type attenuator. Note that the tap on R2 (in *b* and *d*) is at the exact center of resistance.

An L-type attenuator, shown in Fig. 1-c, is perhaps the simplest form of attenuator, consisting of two resistive elements configured in the form of an "L." The L pad does not reflect the same impedance in both directions.

A U-type attenuator, shown in Fig. 1-d, is most often used matching a high impedance to a low impedance.

Before the era of personal computers or hand-held calculators, much time was spent using network formulas, dB charts, and possibly a slide rule to calculate the resistor values for one of those networks. Those calculations were time-consuming and tedious, especially for those not mathematically inclined.

The computer program shown in Table 1 will do all the lengthy calculations in seconds, after you choose one of the 4 networks, enter the line impedance, and the loss (in dB) desired (if applicable). It will then draw the circuit diagram showing the resistor values, the input and output impedances, and where the circuit may be grounded if necessary.

The program is written for the *TRS-80 Model III* with 16K, but it should be adaptable to other computers as well. Note that in the following program a bracket ([) indicates an exponent.

TABLE 1—AUDIO-NETWORK DESIGN

```
 5 CLS: PRINT
10 PRINT "DESIGN AN AUDIO LINE IMPEDANCE
   MATCHING NETWORK OR ATTENUATOR":
   PRINT: PRINT
15 PRINT " KIND", "Z IN/OUT",
   "CONFIGURATION", "SELECT ONE:":PRINT
20 PRINT " T", "EQUAL/TAPER",
   "UNBALANCED","1"
25 PRINT " H", "EQUAL/TAPER",
   "BALANCED","2"
```


www.americanradiohistory.com

```
 30 PRINT " L", "TAPER", "UNBALANCED", "3"
 35 PRINT " U", "TAPER", "BALANCED","4"
 40 PRINT
 45 INPUT"ENTER NUMBER FOR CIRCUIT
    DESIRED";S
 50 ON S GOTO 100, 200, 300, 400
 70 PRINT "ERROR -- DO OVER": GOTO 45
100 CLS: PRINT: PRINT: PRINT " INPUT AND
    OUTPUT IMPEDANCES ARE EQUAL.
    SYMMETRICAL:....1"
105 PRINT: PRINT " INPUT AND OUTPUT
    IMPEDANCES ARE NOT EQUAL, TAPER:....2"
110 PRINT: PRINT: INPUT "ENTER NUMBER FOR
    CIRCUIT DESIRED" ;N
115 ON N GOTO 120, 150: PRINT "ERROR = DO
    OVER": GOTO 110
120 CLS: GOSUB 510: CLS
125 RA=INT (Z*( (K-1)/K+1))):
    RC=INT(Z+K)/(K[2-1))):A=Z: B=Z
130 RA=RA+1: IF S = 2 THEN 205:CLS
135 T$="T": B$="UNBALANCED":
    I$="SYMMETRICAL": U$="MATCH
    IMPEDANCE AND REDUCE POWER LEVEL.
140 GOSUB 1000: GOSUB 1020: GOSUB: 1055
145 GOSUB 2000: GOSUB 2025: GOSUB 2025:
    GOTO 3000
150 CLS:GOSUB 500:GOSUB 530:GOSUB
    525:CLS
155 KA=(K-1)/(K+1):KB=(K[2-1)/(2*K):
    RC=INT((A+B)/(2*KB))
160 RA=INT(((((A+B)*KA)+(A--B))/2)
165 RB=INT(((((A+B)*KA)-(A-B))/2)
170 RC=RC+1:IF S = 2 THEN 250
175 T$="T": B$="UNBALANCED";I$="TAPER":
    U$=MATCH IMPEDANCE AND REDUCE
    POWER LEVEL"
180 GOSUB 1000:GOSUB 1025:GOSUB 1055
185 GOSUB 2000:GOSUB 2025:GOSUB 2055:
    GOTO 3000
200 GOTO 100
205 RA=INT (RA/2):RB=INT(RB/2)
218 CLS
215 T$="H": B$="BALANCED":
    I$="SYMMETRICAL":U$="MATCH
    IMPEDANCE AND REDUCE POWER LEVEL"
220 GOSUB 1000: GOSUB 1050
225 GOSUB 2000: GOSUB 2030: GOSUB 2055:
    GOTO 3000
250 RA=INT (RA/2): RB=INT(RB/2)
255 T$="H": B$="BALANCED":
    I$="TAPER":U$="MATCH UNEQUAL
    IMPEDANCES"
260 GOSUB 1000:GOSUB 1035:GOSUB1050
265 GOSUB 2000:GOSUB 2030:
    GOSUB 2055:GOTO 3000
300 CLS
305 GOSUB 500:GOSUB 530: DB=DB+1:
    GOSUB 525
310 RA=INT((A/SQR(A/B))*(((K*SQR(A/B))-1/K))
315 RC=INT((A/SQR(A/B))*(1/(K-SQR(A/B))))
320 T$="L":B$="UNBALANCED"; I$="TAPER":
    U$="MATCH UNEQUAL IMPEDANCE"
325 GOSUB 1000:GOSUB 1040:GOSUB 1055
330 GOSUB 2015:GOSUB 2025:GOSUB 2055:
    GOTO 3000
400 CLS
405 GOSUB 500: GOSUB 530: CLS:RO=B/A
410 RA=INT(A*((SQR(1-RO))/2))
415 RC=INT(A*(RO/SQR(1-RO))):RC=RC+1
420 T$="U": B$="BALANCED": I$= TAPER":
    U$="MATCH UNEQUAL IMPEDANCES"
425 GOSUB 1000:GOSUB 1045
430 GOSUB 2015:GOSUB 2045:GOSUB 2055:
    GOTO 3000
500 PRINT:PRINT:INPUT "ENTER LARGER OF
    TWO IMPEDANCES" ;A
505 INPUT "ENTER SMALLER OF TWO
    IMPEDANCES";B:RETURN
510 PRINT:PRINT INPUT"ENTER THE
    ATTENUATOR IMPEDANCE";Z
515 PRINT "ENTER THE REQUIRED LOSS IN DB"
520 INPUT"DB LOSS CAN BE 0.5 TO 30+ IN
    SOME CASES";DB
525 K=EXP((DB/20)/(LOG(2.71828)/LOG(10)))
    :RETURN
530 DB=CINT(ABS(20*(LOG(SQR(1/(A/B
    ((/(1+SQR(1-(1/(A/B)))))/LOG(10)))+1)
535 RETURN
1000 PRINT @ 83, "TYPE: "T$: PRINT @ 100,B$
1005 PRINT @ 164, "LOSS IN DB: "DB
1010 PRINT @ 147,I$
1015 PRINT @ 211, "USE: "U$:RETURN
1020 PRINT @ 338, RA: PRINT @ 355,RA: PRINT
    @ 450,A: PRINT @ 476,RC: PRINT
    @ 505,A:RETURN
1025 PRINT @ 338, RA: PRINT @ 355, RB: PRINT
    @ 450, A: PRINT @ 476, RC: PRINT @ 505,B:
    RETURN
1030 PRINT @ 338, RA: PRINT @ 355, RA: PRINT
    @ 450, A: PRINT @ 476, RC: PRINT @ 505, A;
    PRINT @ 594, RA: PRINT @ 611, RA:
    RETURN
1035 PRINT @ 338, RA: PRINT @ 355, RB: PRINT
    @ 450, A: PRINT @ 476, RC: PRINT @ 505, B:
    PRINT @ 594, RA: PRINT @ 611, RB:
    RETURN
1040 PRINT @ 338, RA: PRINT @ 450, A:PRINT @
    476, RC: PRINT @ 505, B: RETURN
1045 PRINT @ 338, RA: PRINT @ 450, A: PRINT @
    476, RC: PRINT @ 505, B: PRINT @ 594, RA:
    RETURN
1050 PRINT @ 770, "IF NECESSARY GROUND AT
    CENTER OF "RC" OHMS RESISTOR.":
    RETURN
1055 PRINT @ 770, IF NECESSARY LOWER LINE
    MAY BE GROUNDED": RETURN
2000 Y = 16: FOR X=4 TO 36: SET (X,Y): NEXT X
2005 Y = 16: FOR X=49 TO 70: SET (X,Y): NEXT X
2010 Y = 16: FOR X=85 TO 120: SET (X,Y): NEXT
    X: RETURN
2015 Y = 16: FOR X=4 TO 36: SET (X,Y): NEXT X
2020 Y = 16: FOR X=49 TO 120: SET (X,Y): NEXT
    X, RETURN
2025 Y = 28: FOR X=4 TO 120: SET (X,Y): NEXT
    X: RETURN
2030 Y = 28: FOR X=4 TO 36: SET (X,Y): NEXT X
2035 Y = 28: FOR X=49 TO 70: SET (X,Y): NEXT X
2040 Y = 28: FOR X=85 TO 120: SET (X,Y): NEXT
    X: RETURN
2045 Y = 28: FOR X=4 TO 36: SET (X,Y): NEXT X
2050 Y = 28: FOR X=49 TO 120: SET (X,Y): NEXT
    X: RETURN
2055 Y = 60: FOR Y=16 TO 19: SET (X,Y): NEXT Y
2060 Y = 60: FOR Y=24 TO 28: SET (X,Y): NEXT
    Y: RETURN
3000 PRINT: PRINT: INPUT "PRESS <ENTER> TO
    START NEW CALCULATION.";:GOTO 5
3010 END
```


www.americanradiohistory.com

TELE-TOLL TIMER

continued from page 64

edges so that the filter stays in place.) Now feed the telephone and supply cords through the hole in the panel and strip away some insulation. The telephone cord will have four color-coded leads; clip off the yellow and black leads (they are not needed), and solder the red and green leads to the points indicated in the parts-placement diagram of Fig. 8.

Using a piece of hook-up wire, solder one end to the fuse holder and the other to the main board as shown in the parts-placement diagram. Solder one side of the line cord to the free end of the fuse holder and the other to the board. Then mount the holder.

Install the boards in the cabinet. Figure 9 shows the installed unit as viewed from the top. Note that the regulator (IC8) is secured to the rear panel. That grounds the cabinet and also allows the cabinet to be used as a heat sink. Press-on letters can be used to label the project to improve it's appearance. Now, it's finally time to test the unit.

Testing and use

Verifying the operation of the unit is easy. Simply plug T1 into any nearby AC outlet. The display should light showing "000," and then start counting. If it doesn't, first check the power supply and the wiring of IC1. Once you get the correct readout, insert the modular plug into your telephone jack. The elapsed time shown on the display should then freeze and, after about 20 seconds, go out. If it doesn't, again check the IC1 wiring. If everything is OK, your telephone timer is ready for use.

Now, anytime the phone is picked up, the display will light and the unit will begin counting. By periodically checking the display (during your conversation), it's easy to hold down the time you spend on the phone—just think about how much each minute costs as you are reminded by bright LED's about just how much time you're spending talking (or listening)!

We should note that, in addition to timing phone calls, the unit is great for other timing tasks around the house as well. To use the unit as a simple timer, just disconnect the telephone plug and it starts counting. To reset the timer, unplug T1 and plug it in again when you are ready to start timing. Of course, it's also easy enough to add a manual reset switch for that purpose.

As a side note, try timing the next sales call you get. You'll be amazed at how long some of them last—five minutes or more. Surely there are better things to do with your time than listen to sales pitches over the phone! **R-E**

SEE YOUR DEALER TODAY

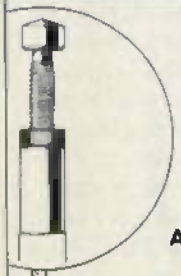

FROM

'Firestik' ANTENNAS ACCESSORIES

HERE'S A TIP THAT'S PERFECT!

AM/FM AUTO RADIO AND CB

'Firestik' II

GOLDEN SERIES

BARE-HANDS TUNABLE
"NO TOOLS NEEDED"
HIGH PERFORMANCE ANTENNAS

ALSO ANTENNAS FOR
CORDLESS TELEPHONES
MONITOR SCANNERS

Dealer & Distributor Inquiries Invited
SEND FOR FREE CATALOG

'Firestik' Antenna Company
2614 East Adams/Phoenix, AZ 85034

Name _____
Street _____
City _____
State _____ Zip _____

Serving the CB and Communications Market Since 1962

5-YEAR REPLACEMENT WARRANTY

CIRCLE 40 ON FREE INFORMATION CARD

VIEW 8 TRACES ON YOUR SINGLE OR DUAL TRACE SCOPE WITH THIS LOW COST DEVICE!!

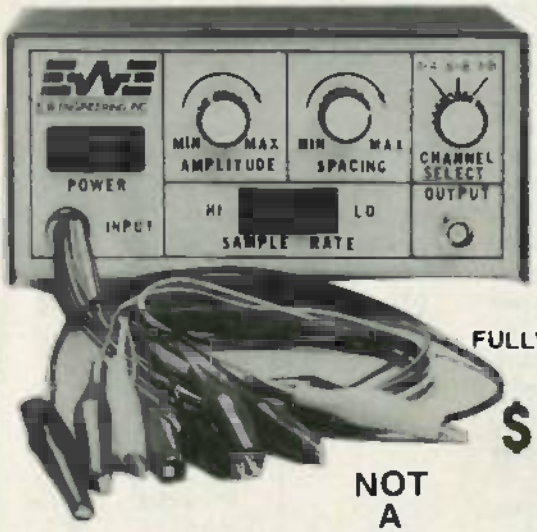

Now you no longer have to spend thousands on an expensive multi-trace oscilloscope – our single trace Hitachi scope combined with this module will allow you to view up to 8 simultaneously occuring analog or digital (or both) signals in their real time and amplitude relationship. The MPX 101 may be used on any oscilloscope, whether single, dual or multiple traces. Its low cost makes it a particular favorite for designers, testers, hobbyists and repairmen who want to compare and analyze displayed signals in a timing diagram format. The controls on the front panel of the metal case allow you to vary amplitude and spacing of the displayed signals.

MODEL MPX101
FULLY ASSEMBLED & TESTED!

NOT A KIT

$99.88

FULL 1 YEAR REPLACEMENT WARRANTY

– Made In The United States –

SPECIFICATIONS

Inputs: 8 signals plus ground via 9 input leads terminated with alligator clips
Bandwidth: ± 1dB to 5 MHz
Impedance: 10.9 K
Input Voltage: ± 5V peak (diode clamped to ± 5 Volt supplies)
Output: Staircase waveform summed with input signals, 0-800 mV full scale
Step Amplitude: Variable 0 to 150 mV/ step
Signal Voltage: Variable 0 to 150 mV/step @ 5V Input
Multiplex Rate: Switch selectable, 40 KHz or 4 KHz
Impedance: 50 Ohms
Power: 105-135 VAC @ 1 V a
Dimensions: 6.25" x 3.25" x 4.75" (WxHxD)
Operating Temperature: 0-40°C
Weight: 1 lb. 10.5 oz.
Warranty: one year full replacement warranty from date of purchase
Lighted on/off power switch
Wood grain finished metal case

DISTRIBUTOR AND REPRESENTATIVE INQUIRIES INVITED

E.W. ENGINEERING, INC.

VISA, MASTERCARD, AMEX TELEPHONE ORDERS ACCEPTED!
6 Herman Drive, E. Granby, CT 06026 □ 203/651-0285

CIRCLE 82 ON FREE INFORMATION CARD

www.americanradiohistory.com

DESIGNER'S NOTEBOOK

Motor speed control

ROBERT GROSSBLATT

SMALL DC MOTORS, LIKE THOSE USUally found in toys, can be really handy things to keep around. They can be used in a variety of applications where the circuit you're designing has to move something other than just electrons. Those motors are great for control applications or just about anything else you can think of that doesn't require a great deal of precision.

However, those small DC motors have their own set of problems. For one, the motor's speed is notoriously dependent on the applied voltage. But that drawback can be turned into a benefit with the simple addition of a rheostat or potentiometer to make the motor speed variable. However, anyone who's ever tried making a motor-speed control using that principle, soon discovers that it's terribly unreliable, and it's an inefficient way to go about things.

No matter how small the motor, you still have to deal with the fact that they all have a certain amount of inertia, however small. That means that regulating really slow speeds with just a potentiometer is almost impossible. It usually requires that you get the motor going first and then back the potentiometer off until you achieve the desired speed.

Not only that, but if the motor draws a substantial amount of current, you're going to find that standard potentiometers won't be able to handle the power requirements: They'll start smoking and that will be the end of that. More expensive potentiometers can be used, but you'll still have the same low-speed problems. Obviously, there has to be a better way—and there is!

Controlling DC motors

Another way of controlling the speed of a DC motor is shown in Fig. 1. Here instead of controlling the motor by varying the voltage, we simply apply a constant voltage and vary the duty cycle. All that means is that we'll control the amount of time the motor is on and allow the applied voltage to remain constant. By doing things that way, the inertia of the motor can be made to work on our behalf because it will keep the motor turning until the next pulse is applied to "kick" it along. Therefore, how fast the motor turns depends on the controlling oscillator.

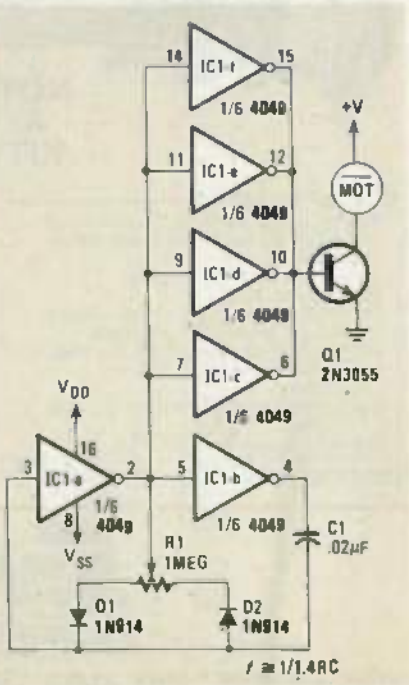

FIG. 1

Now, there are many ways to build an oscillator that can be used to control a motor. We've already seen that oscillator design is a wide open field and just about any combination of circuit building blocks can be used. Transistors, logic gates, 555 timers, and so on can be used to form the basis of a perfectly workable circuit. Each has it's own advantages and disadvantages.

Figure 1 shows an oscillator circuit that may be used in motor-speed control applications: It is by no means the absolute last word in—or the best approach to—solving the problem. It is, however, one way to go about it and is perfectly workable in a wide variety of applications. In any event, that circuit will show you the basic method to follow in designing a circuit that is capable of handling your particular requirements.

Higher precision means using a more precise oscillator and adding a crystal to the circuit to lock-in the frequency. Heavier motors will need a "beefier" output stage than the single transistor shown in Fig. 1. However, that circuit shows the basic approach to follow (you may not find it necessary to go any further).

As shown, two inverters—IC1-a and IC1-b (each ⅙ of a 4049 hex inverter)—are used to make a simple oscillator whose frequency is approximately given by:

$$f = 1/1.4RC$$

Where R is the value of the potentiometer.

The basic circuit shown is one that you've seen a million times and have probably used just as

www.americanradiohistory.com

often as a convenient clocking circuit. By adding the two diodes (D1 and D2), we can split the charging of the capacitor and thereby control the positive and negative parts of the cycle—D1 controls the positive and D2 controls the negative.

The time the circuit puts out a high and turns on the motor is controlled by the value of the left part of potentiometer R1 and the low-time is controlled by the right part of potentiometer. Regardless of how the potentiometer is set, the motor will always "see" the maximum voltage and as a result, the motor is less likely to stall at low speeds. You'll also find that the motor will start turning at a much slower speed than it would if the control was achieved by varying the voltage applied to it.

Although the transistor in our example is a 2N3055, any transistor that can handle the power requirements of the motor will do. If the motor is really "chunky," you might have to make a Darlington or add another stage to the output. Ganging the four remaining gates in the IC provides enough power to drive even a 2N3055, however, other applications may require other components. Although you can use any CMOS gate that can be made to oscillate, the 4049 is heftier than most of the others. But then, the final decision of circuit elements is yours, since only you know what your needs are.

There are several improvements on the basic circuit that come to mind almost immediately: They include using a crystal oscillator, adding a keyboard for speed-selection, or adding a digital display (which offers some interesting possibilities since all you have to do is count pulses and do a bit of arithmetic). Just as with all the circuits discussed in this column, remember that what we have described here is only a starting point.

You can elaborate on the circuit as much as you want to make it as versatile as you need. The only thing I ask is that you let me know what you've done—there's a lot of people out there who are interested. R-E

ELECTRONIC COMPONENTS

160 PAGE
FREE CATALOG

MANUFACTURERS OF QUALITY ELECTRONIC COMPONENTS
• BATTERY CLIPS & HOLDERS
• CABLE SETS • CONNECTORS • CAPACITORS
• DISPLAYS • LEDs • FUSES • JACKS & PLUGS
• KNOBS • LAMPS • POTENTIOMETERS
• RF COILS • RELAYS • RESISTORS
• SWITCHES • SEMICONDUCTORS • SPEAKERS
• TEST EQUIPMENT • TRANSFORMERS • TOOLS
• WIRE & CABLE
OVER 15,000 DIFFERENT ITEMS IN STOCK!

MOUSER ELECTRONICS
11433 WOODSIDE AVE. SANTEE CA 92071
PHONE (619) 449-2222 TWX 910-331-1175

CIRCLE 84 ON FREE INFORMATION CARD

SAVE BY BUILDING OUR RACK MOUNT STUDIO EQUIPMENT

QUADRAFUZZ — for separate frequency bands of distortion are mixed for the smoothest fuzz you've ever heard. no. 6720 ..... $39.88

HYPERFLANGE/CHORUS — the cleanest, widest range, most versatile flanger anywhere at any price. no. 6750 ..... $149.95

VOCODER — unmatched performance in a versatile, low cost rack package. no. 6710 ..... $99.95

HOT SPRINGS — user's agree, short of studio plate systems, you won't find a better reverb at any price. no. 6740 ..... $59.95

ADD $3 SHIPPING FOR EACH KIT ORDERED

Innovative, cost effective designs by Craig Anderton in easy to assemble kits from:

B&A Electronics, Inc.
Direct mail orders and inquiries to: Dept. 11R
1020 W. Wilshire, Oklahoma City, OK 73116 (405) 843-9674
Ask for your free catalog.
CHARGE TO VISA OR MC TOLL-FREE
1-800-654-8657 9AM to 5PM CST MON-FRI

CIRCLE 53 ON FREE INFORMATION CARD

FREE

McIntosh

STEREO CATALOG and FM DIRECTORY

Get all the newest and latest information on the new McIntosh stereo equipment in the McIntosh catalog. In addition you will receive an FM station directory that covers all of North America.

SEND TODAY!

McIntosh Laboratory Inc. RE
East Side Station P.O. Box 96
Binghamton, N.Y. 13904-0098

NAME _____

ADDRESS _____

CITY _____ STATE ___ ZIP _____

If you are in a hurry for your catalog please send the coupon to McIntosh.
For non rush service send the Reader Service Card to the magazine.

CIRCLE 93 ON FREE INFORMATION CARD

www.americanradiohistory.com

DRAWING BOARD

ROBERT GROSSBLATT

Making the 4089 do useful things

ONE OF THE NICEST THINGS ABOUT designing logic circuits is that they're, well, so logical. All you need do is figure out what you want the circuit to do, work out a flow chart or block diagram of the unit, find the parts, and that's that.

Well, to be truthful about it, there's a bit more to it than that (as we all know), but the creative work can all be done on paper. Once the circuit has been breadboarded, there are always certain minor technical problems to be taken care of—like the unit doesn't work. But that's circuit *hacking*, not circuit *design*.

Anybody who's been following our discussion on rate multipliers and has breadboarded the circuit we worked out last time, should've found the 4089 to be really simple to use.

In our last discussion of rate multipliers, we left out part of the circuit—the display—because, as previously stated, you can use any counter arrangement that you're familiar with. All you need is a circuit that's able to count and display the number of digits you expect to see in your answer.

This month we'll add the display circuitry and also take a look at what must be done to make our circuit do useful things. We'll begin our discussion with the display circuit.

The display

Before we get into our discussion, here's a little advice that can save you plenty of trouble in the long run. One of the best habits to get into when designing is to keep a notebook containing schematics of often-used circuits. (The "Designer's Notebook" is a good example of the type of circuits you should keep handy.) Remember Grossblatt's 15th law: *Never trust your memory!*

FIG. 1

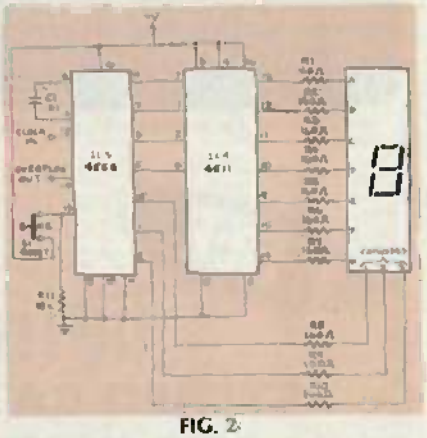

FIG. 2

A counter-display combination is used almost as often as a clock circuit and, therefore, is a natural addition to your files. With that out of the way, let's get to it!

In the example we used for the circuit last time around, we were multiplying 14 times 67. That means we'll need 3 digits (to display 938). Since we'll be counting three digits and using CMOS logic, the 4553 decade counter/multiplexer is a good choice. We will couple it to a standard 4511 decoder driver.

Figure 1 shows the pinouts for both those IC's. You should be familiar with the 4511 (Fig.1-a) since we used it to drive the displays in the keyboard encoder we designed about a year or so ago (February, March, and April, 1983). It's a "plain vanilla" decoder/driver for common-cathode displays.

The 4553 (Fig. 1-b) is a mainstream device that has all the circuitry needed to count up to 999 on board, as well as the multiplexing logic to directly handle three digits. The IC also contains three cascaded synchronous-counters whose outputs time-share pins 5, 6, 7, and 9.

The individual digits are turned on by using the three DISPLAY-ENABLE pins (1, 2, and 15). The RESET, LATCH-ENABLE, and CHIP-ENABLE pins are self explanatory (they're the same as similar controls found on other IC's). Pins 3 and 4 are the external-world connections for the timing capacitor used by the on-board, low-frequency multiplexing oscillator.

Although you may find the 4553 a bit on the expensive side—usually about three or four dollars by mail order—it's a good choice because takes the place of a whole handful of IC's. The savings in board complexity, power consumption, and bench time make it more than worth the extra cost.

Figure 2 is the schematic for the display portion of the rate-multiplier demonstration circuit we started last month. Because the parts count is low, designing a printed circuit board for it is a snap. (You should be able to fit everything on a small, single-sided board.)

www.americanradiohistory.com

By coupling the circuit in Fig. 2 to the one we worked out last month, you'll have yourself a complete demonstrator for a rate multiplier. Admittedly, last month's circuit isn't the most useful circuit in the world, since it's hard-wired to multiply two particular numbers together. But we'll talk about how to make it a little more versatile in a little bit.

We've already seen how easy it is to do multiplication, but what about division? Well, believe it or not, adapting our circuit to do division is simple. But first, let's go through a quick run down on the theory behind doing multiplication. The rate multiplier takes an input clock and gives us two different kinds of outputs—the base rate and the multiplied rate.

The relation between the two is controlled by a 4-bit word (number) presented to the IC's data or weighted inputs. The multiplied rate will be equal to the product of the base rate and the binary word. As mentioned in previous discussions, doing multiplication is really just successive addition. We keep track of the base-rate pulses and count the multiplied-rate pulses.

When we continue, we will take a look at what steps we have to follow to get the device to perform division. R-E

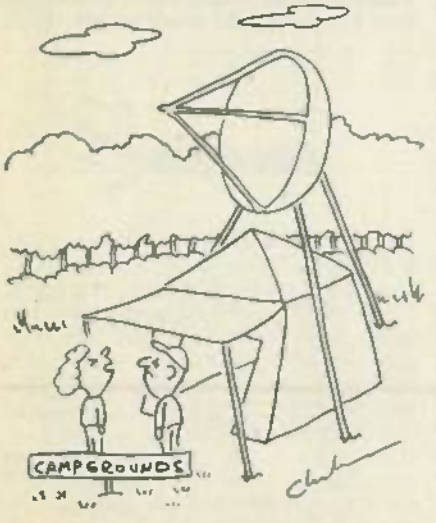

"People will think we came here to watch television."

WERSI KEYBOARD-SYMPHONY

The latest in technology for absolutely authentic sounds, incredibly easy playing features and big savings by doing the final assembly yourself.

Ask for a sound demo today. Call 1-800-233-3865 or send in the coupon. (incl. $ 2 shipping charge)

Pianostar S 2000
- the real piano feeling -

Alpha DX 300
- the musical giant that fits -

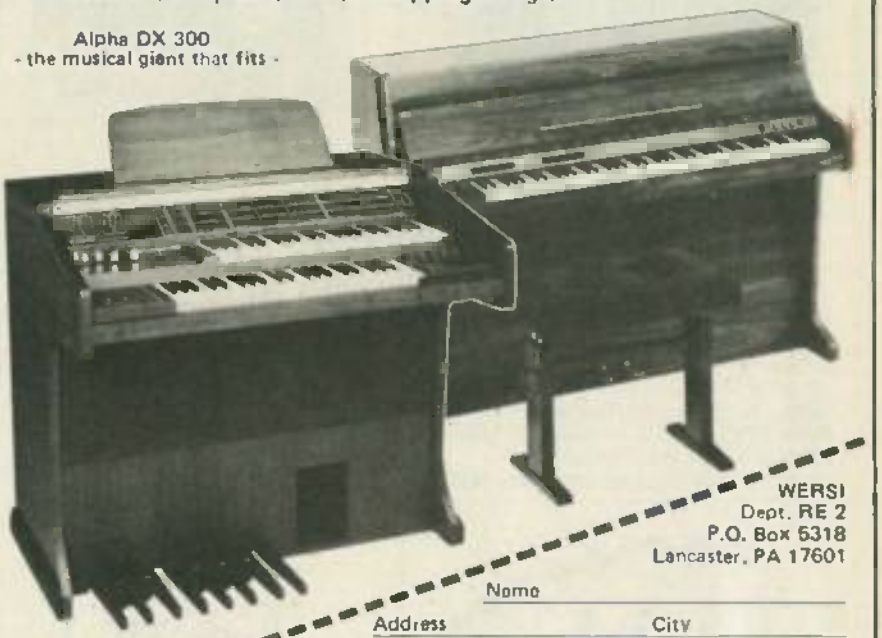

WERSI
Dept. RE 2
P.O. Box 5318
Lancaster, PA 17601

Name
Address City
State Zip Phone

CIRCLE 59 ON FREE INFORMATION CARD

SUPER LONG PLAY TAPE RECORDERS

10 Hour Model — $95.00*
14 Hour Model — $159.00*

Modified Panasonic Slimline. High quality, AC-DC Recorders provide 5 or 7 continuous hours of quality recording & playback on each side of cassette for a total of 10 or 14 hours depending on model. Built-in features include • Voice level control. • Digital counter, etc. TDK DC 180 Cassette Furnished

PHONE RECORDING ADAPTER

Records calls automatically. All Solid state connects to your telephone jack and tape recorder. Starts recording when phone is lifted. Stops when you hang up. $24.50* FCC APPROVED

VOX VOICE ACTIVATED CONTROL SWITCH

Solid state. Self contained. Adjustable sensitivity. Voices or other sounds automatically activate and control recorder. Uses either recorder or remote mike. $24.95*

*Add for ship & hdlg. Phone Adapter & Vox $1.50 ea. Recorders $4.00 ea. Cal. Res. add tax. Mail order, VISA M/C, COD's OK. Money Back Guarantee. Qty. disc. avail., Dealer inquiries invited. Free data

AMC SALES INC. Dept A 9335 Lubec St., Box 928, Downey, CA 90421 (213) 869-8519

CIRCLE 67 ON FREE INFORMATION CARD

Be an FCC LICENSED ELECTRONIC TECHNICIAN!

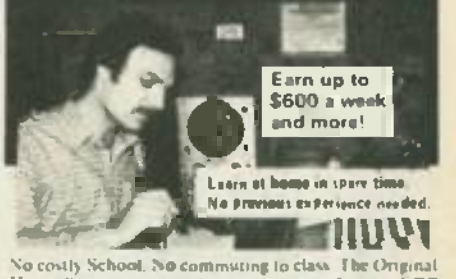

No costly School. No commuting to class. The Original Home-Study course that prepares you for the FCC Radiotelephone license exam in your spare time! An FCC Government license is your "ticket" to thousands of exciting jobs in Communications, Radio & TV, Mobile two-way, Microwave, Computers, Radar, Aerospace and more. You don't need a college degree to qualify, but you do need an FCC License. No need to quit your job or go to school! You learn how to pass the FCC License exam at home at your own pace with this easy-to-understand, proven course. It's easy, fast and low cost! GUARANTEED PASS. You get your FCC License or money refunded. Write for free details. Soon you could be on your way to being one of the highest workers in the electronics field. Send for FREE facts now. MAIL COUPON TODAY!

COMMAND PRODUCTIONS
FCC LICENSE TRAINING, Dept. 90
P.O. Box 2223, San Francisco, CA 94126

Rush FREE facts on how I can get my FCC License in spare time. No obligation. No salesmen will call.

NAME
ADDRESS
CITY STATE ZIP

CIRCLE 68 ON FREE INFORMATION CARD

www.americanradiohistory.com

Radio-Electronics mini-ADS

THE MEAN LITTLE KIT New compact kit of electronic tools. Includes 7 screwdrivers, adjustable wrench, 2 pair pliers, wire stripper, knife, alignment tool, stainless rule, hex-key set, scissors, 2-flexible files, burnisher, soldering iron, solder aid, solder and de-soldering braid. Highest quality padded zipper case. Send check or charge Bank-Americard, Mastercarge, or American Express. The *JTK-6* sells for $95.00—**JENSEN TOOLS INC., 7815 S. 46th Street, Phoenix, Arizona 85040, (602) 968-6231.**

CIRCLE 69 ON FREE INFORMATION CARD

California-DC Regulated Switching Power supply +5v dc @ 5 amp + 12v dc @ 2 amp +12v dc @ 1.8 amp −12v dc @ .5 amp 115-230v ac input, fused, EMI filtered. Removable DC Power Harness and Schematics included. 7.4" × 6.2" × 1.7" ht. Visa/MC/M.O./check: when clears. $37.50 ea. (Free shipping in U.S.) **1-800-327-7182/1-305-869-9292. Power Plus, 469 W. S.R. 436, Altamonte Springs, Fla. 32714.** (Call for quantity price).

CIRCLE 8 ON FREE INFORMATION CARD

CALL NOW AND RESERVE YOUR SPACE

- 6 × rate $650 per each insertion.
- Reaches 225,016 readers.
- Fast reader service cycle.
- Short lead time for the placement of ads.
- We typeset and layout the ad at no additional charge.

Call **212-777-6400** to reserve space. Ask for Arline Fishman. Limited number of pages available. Mail materials to: mini-ADS, RADIO-ELECTRONICS, 200 Park Ave. South, New York, NY 10003.

APPLIANCE REPAIR HANDBOOKS—13 volumes by service experts; easy-to-understand diagrams, illustrations. For major appliances (air conditioners, refrigerators, washers, dryers, microwaves, etc.), elec. housewares, personal-care appliances. Basics of solid state, setting up shop, test instruments. $2.65 to $5.90 each. Free brochure. **APPLIANCE SERVICE, PO Box 789, Lombard, IL 60148. 1-(312) 932-9550.**

CIRCLE 92 ON FREE INFORMATION CARD

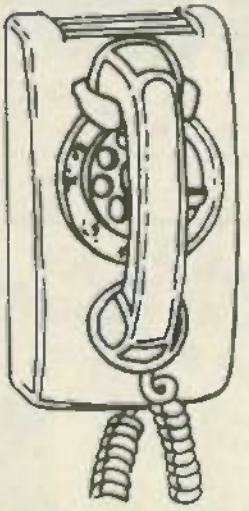

CALL NOW AND RESERVE YOUR SPACE

- 6 × rate $650 per each insertion.
- Reaches 225,016 readers.
- Fast reader service cycle.
- Short lead time for the placement of ads.
- We typeset and layout the ad at not additional charge.

Call **212-777-6400** to reserve space. Ask for Arline Fishman. Limited number of pages available. Mail materials to: mini-ADS, RADIO-ELECTRONICS, 200 Park Ave. South, New York, NY 10003.

ELECTRO IMPORTING CO. CATALOG. This reprint of the historic 176-page catalog No. 20 gives you an accurate look at the state of electronics in 1918. Contains everything from a Zinc Spark Gap to a 1000-Mile Receiving Outfit. You can get your own copy of this modern antique, profusely illustrated, for only $4.95 plus $1.00 P&H. Order yours from **R-E BOOKSTORE, Radio-Electronics, 200 Park Avenue South, New York, NY 10003.**

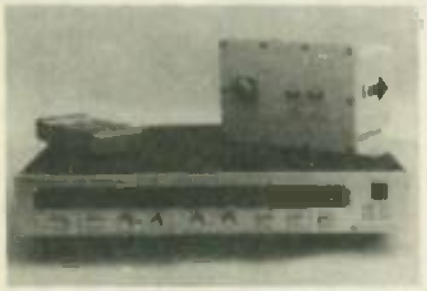

SATELLITE TELEVISION RECEIVER SEMIKIT with dual conversion downconverter. Features infrared remote control tuning, AFC, SAW filter, RF or video output, stereo output, Polorator controls, LED channel & tuning indicators. Install six factory assembled circuit boards to complete. **Semikit $400.00.** Completed downconverter add $100. Completed receiver and downconverter add $150. **JAMES WALTER SATELLITE RECEIVER, 2697 Nickel, San Pablo, CA 94806. Tel 415-724-0587.**

CIRCLE 44 ON FREE INFORMATION CARD

SATELLITE CONTROL CABLE—NEMAL ELECTRONICS has designed a new series of combination cables for TVRO installations. These cables provide all necessary wires for signal, motor and receiver power and sense circuits together in one direct burial jacket. **TYPE-1** RG-59 + 9 conductor (2-18gu) $495/1000', **TYPE-2** RG-59 + 11 conductor (2-12gu) $689/1000', **TYPE-3** dual RG-59 + 11 conductor (2-12gu) $879/1000', all made with milspec RG59, 96% copper shield, tinned drain wires. Over 500 types of cable, connectors, SMATV products in stock. Authorized distributor Kings-Amphenol-Columbia. **NEMAL ELECTRONICS Inc., 12240 N.E. 14th Ave., N. Miami, FL 33161 (305) 893-3924.**

CIRCLE 96 ON FREE INFORMATION CARD

www.americanradiohistory.com

Radio-Electronics mini-ADS

FREE 1984 ELECTRONIC TOOL & INSTRUMENT CATALOG is packed with over 5,000 quality technical products for assembling, testing and repairing electronic equipment. All products fully illustrated with photographs, detailed descriptions and pricing to allow for easy ordering by phone or mail. Most orders are shipped within 24 hours. 100% satisfaction guarantee. **CONTACT EAST, 7 Cypress Drive, Burlington, MA 01803. (617)272-5051.**

CIRCLE 50 ON FREE INFORMATION CARD

SUBSCRIPTION TV MANUAL. This information packed book details the methods used by subscription TV companies to scramble and descramble video signals. Covers the Sinewave, Gated Pulse, SSAVI system, and the methods used by most cable companies. Includes circuit schematics, theory, and trouble shooting hints. **Only $12.95** plus $2.00 first class P&H. **ELEPHANT ELECTRONICS INC., (formally Random Access) Box 41770-R, Phoenix, AZ 85080.**

CIRCLE 31 ON FREE INFORMATION CARD

TUNE "THE HIDDEN SIGNALS" ON SATELLITE TV —"Secret signals on the birds". A new technical book covering the reception of: stereo subcarriers - telephone channels, - world news service, -teleprinter news, - radio channels, - stock market services - teletext - single channel per carrier • plus many other satellite hidden signals. The equipment, how it can be used, etc. Fully illustrated, just published. **$14.95 plus S & H. Universal Electronics, Inc., 4555 Groves Road - Suite 3-C, Columbus, Ohio 43232.**

CIRCLE 17 ON FREE INFORMATION CARD

TIMEX/SINCLAIR 1000, 1500, 2068, ZX81, **SPECTRUM** Hardware & Software for all computers: **PRTR I/F**—A Centronics parallel printer interface. Order PRTIF: $50. **EPROMMER**—Programs 2716, 2732, 2764's Order EPRMR: $75. **ASM/DSM**—A full featured assembler/disassembler. Order ASMDSM: $40. **TEXTEDIT**—A very complete editor, including 64-column mode. Order EDIT: $40. When ordering, specify type of computer. Cash, check, or C.O.D. only. Send to: **Research Service Laboratories, P.O. Box 19124, OKC, OK 73144.**

CIRCLE 10 ON FREE INFORMATION CARD

CONVERT YOUR TV
TO A HIGH QUALITY MONITOR

USE WITH COMPUTERS, VCR's & CAMERAS

TRVM kit permits Dual Mode operation on transformer B&W or Color sets. • Hi-resolution Direct Video • Up to 80 characters per line • Wide bandwidth • Easy installation

34.95 TRVM

DVM-1 Hot Chassis kit with Audio 34.95

• Isolation Devices
• Mac Lisa Hardware & Software

AMP Inc.
Box 411, Los Angeles, CA 90028
(213) 466-5533

CIRCLE 70 ON FREE INFORMATION CARD

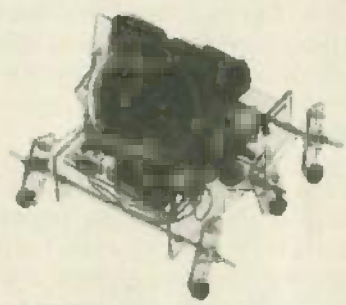

ROBOT KIT - EXCITING, FUN, EDUCATIONAL. The AVOIDER senses objects in its path and turns to avoid them. This kit aquaints you with infrared sensors, gear drive trains, leg motion linkage and much more. PC brain board factory wired and tested. Precision parts assemble in 1 to 2 evenings. **$49.95 plus $3.50 shipping. BUYUS, INC. Dept RE114, 10 White Birch Dr., Ossining, NY 10562. VISA or MasterCard (914) 762-4799.**

CIRCLE 85 ON FREE INFORMATION CARD

CALL NOW AND RESERVE YOUR SPACE

- 6 × rate $650 per each insertion.
- Reaches 225,016 readers.
- Fast reader service cycle.
- Short lead time for the placement of ads.
- We typeset and layout the ad at no additional charge.

Call 212-777-6400 to reserve space. Ask for Arline Fishman. Limited number of pages available. Mail materials to: mini-ADS, RADIO-ELECTRONICS, 200 Park Ave. South, New York, NY 10003.

TELTONE'S TRK-957 KIT makes breadboarding a low-power, central office quality DTMF detection system easy and inexpensive. The included M-957 receiver decodes 12 or 16 digits and operates from 5 to 12V dc. Its sensitivity, wide dynamic range, noise immunity, and low power consumption are ideal for telephone switching, computer and remote control applications. Only $24.75. **To order, call: TELTONE, 1-800-227-3800, etx. 1130.**

CIRCLE 73 ON FREE INFORMATION CARD

RECEIVE SNOW FREE UHF PICTURES. Manufacturer of DX Satellite Receivers now offers the ultimate UHF reception system. Excellent reception to 160 miles or more. System comes with 114 element modulated quad YAGI antenna, 39 db L.N.A. (booster). Reception where others fail! 1 year warranty. 30 day refund. **$199.95** + shipping VISA-MC. Specify channels. Order now. **DX TELE LABS, 6601 E. Clinton St., Scottsdale, AZ 85254** 602-998-3966.

CIRCLE 89 ON FREE INFORMATION CARD

www.americanradiohistory.com

COMMUNICATIONS CORNER

HERB FRIEDMAN
COMMUNICATIONS EDITOR

Mobile digital-communications systems

AS DIGITAL DEVICES WORK THEIR WAY into more and more communications systems, they are usually applied within the context of a complete operating package. That is, if they provide data or communications exchange, they do 100% of the work. But you shouldn't think that computerization *necessarily* excludes voice—it can serve to enhance what is essentially voice communication.

An example of that is the application of computers to radio-taxi dispatching, whereby digital information is transmitted through the same equipment that carries voice communications. The digital data, in such an instance, is the trip charges determined by a computer that has been programmed according to the voice information that the dispatcher receives from the driver.

How it works

Figure 1 shows the communications system. It's really a UHF radio with a computerized taximeter in the vehicle and a computer at the central station. The computerized meter has a digital display and a microprocessor that monitors waiting time and *trunks*. (Trunks being the number of suitcases or parcels handled by the driver or loaded by the passenger.) The waiting time at each stop is determined by a clock within the meter; when the wheels stop turning, the clock starts running. The total number of trunks for which there is a charge is entered by the driver, if possible. If the meter does not have provisions for entering trunk data, it could be supplied to the dispatcher by the driver through the voice channel; the dispatcher would then enter that information into the central computer.

When the driver picks up a passenger, he radios his starting location and the passenger's end the destination to the dispatcher. The dispatcher then enters the driver's location and destination into his terminal, which is connected to a computer that's been pre-programmed with every street address in town and the surrounding area.

The computer calculates the basic mileage charge and also automatically transmits that information (in digital form) to the taxi, where it is passed on to the meter. The mileage charge serves as a base rate to which waiting and trunk charges are added. At the end of the trip, the computer in the meter calculates the waiting-time and trunk charges, and adds them to the trip charge. The total cost of the trip would then be displayed on the meter's digital readout. Depending on the sophistication of the system, the taximeter might automatically transmit the total charges back to the central computer.

Obviously, the computerized part of the system is no problem. It doesn't take advanced technology to transmit information from the

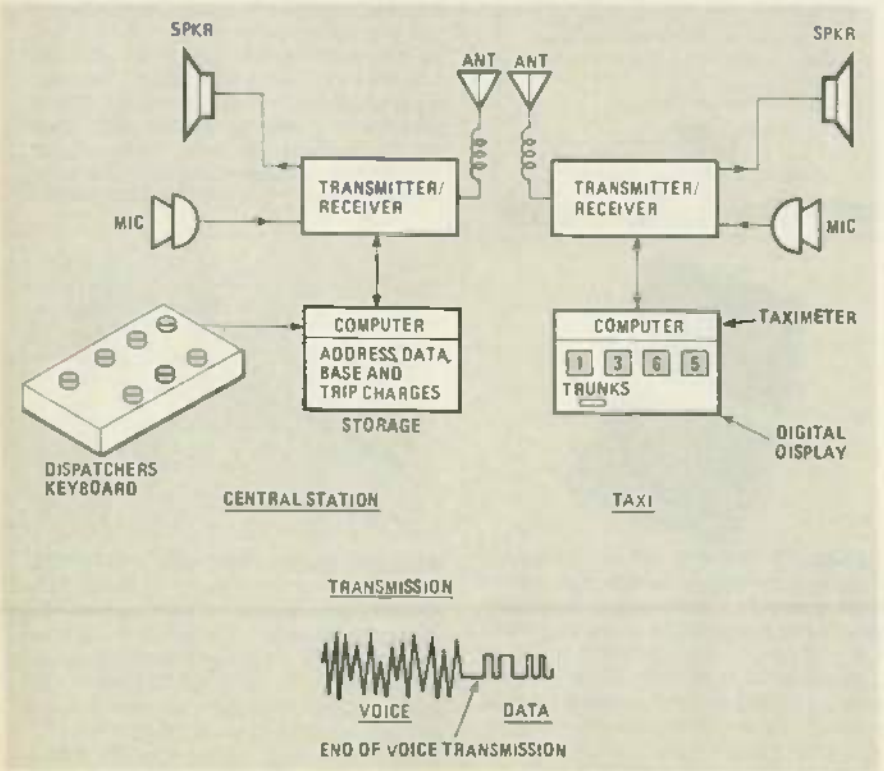

FIG. 1

www.americanradiohistory.com

taxi or the central computer and then manipulate the data in any way necessary. Here the problem is really in integrating the computer and voice channels. Noise, fading, and other characteristics of mobile radio usually do not interfere with voice communications because the operator can ask for a repeat of the transmission (or simply fill in the holes with his own judgment, based on knowledge and experience). Voice systems are only designed to transmit about 80% of the intelligence with the brain filling in the remainder.

Computers, unfortunately, cannot fill in the blanks from experience. If the central station transmits the data for a $12.50 trip-charge and the data doesn't get into the taximeter, nothing is going to work correctly. Then there's the problem of shared channels. If the computer transmission is automatic, it must be certain the channel is clear.

Because we are dealing with less than a byte of data, (8 bits can represent a charge of $255—and that's a pretty large taxi fare) OK, so now we're dealing with an extremely short data-transmission (on the order of 7 to 30 milliseconds), even if the sequence is repeated several times because of a checksum error. Thus, it's possible to easily squeeze the data between the time the operator stops talking and the carrier drops out; all that's needed is the length of time it takes to take a breath to piggyback the data on the voice channel. Therefore, we do not need a clear channel specifically for data transmission; if it was clear for voice it will be clear for data. The only problem we would have appending the data to the end of the voice transmission is knowing when the chit-chat was over.

In the interval between the voice and carrier drop-out, we could easily add digital data to just about any voice system. What we need is a gizmo that knows when the voice transmission is over and will then signal a computer to "go." That can easily be done by something as simple as monitoring the push-to-talk switch on the transmitter. R-E

the essential A/D connection

189.95

- 8 single-ended channels/8 bit ± 1 LSB; Adjustable built-in reference 2.5-5 volts
- Connects to any RS-232 serial port/baud rate adjustable 300-19.2K/driver software provided for most makes
- Easily expanded to provide digital control outputs
- Ideal for hobbyists, labs and schools desiring low cost multi-channel analog data conversion
- Price includes the AD-1 with 90-day warranty, driver software, manual and full after sale support

For immediate action:
1-800-643-4343

OZARK Peripherals

Caldwell, Justiss & Co., Inc.
P.O. Box 520, Fayetteville, AR 72702

CIRCLE 78 ON FREE INFORMATION CARD

CRYSTALS

32.768khz	1.85
1.0mhz	3.85
1.8432	3.85
2.0	2.85
2.097152	2.85
2.4576	2.85
3.2768	2.85
3.579545	2.85
4.0	2.85
5.0	2.85
5.0688	2.85
5.185	2.85
5.7143	2.85
6.0	2.85
6.144	2.85
6.5536	2.85
8.0	2.85
10.0	2.85
10.738635	2.85
14.31818	2.85
15.0	2.85
16.0	2.85
17.430	2.85
18.0	2.85
18.432	2.85
20.0	2.85
22.1184	2.85
32.0	2.85

OSCILLATORS

1Mhz	9.6768	19.6608
2.4576	10.000	20.000
2.7648	10.240	20.100
3.120	13.230	23.6725
3.6864	14.000	24.00
4.000	14.31818	25.000
4.032	14.175	28.636
4.9152	14.7456	28.824
5.000	15.000	29.496
5.0668	18.000	30.000
8.000	18.257	32.000
8.338	16.384	35.488
7.168	18.000	40.000
8.000	18.432	80.000
9.216	18.6624	80.000
9.218	19.3536	

PRICE EACH
1 ..... $18.95
10 ..... $13.95
25 ..... $ 9.95

I/C SOCKETS

8 pin ST	12	20 pin ST	29
14 pin ST	14	24 pin ST	29
16 pin ST	16	28 pin ST	39
18 pin ST	19	40 pin ST	46

DIP SWITCHES

MS4	$ 79
MS6	89
MS8	95
MS10	1.29

800-341-4468

World Distributors, Inc.
709 N. Memorial Parkway
Huntsville, Alabama 35801
(205) 539-0441
TLX 810-726-2135 810-726-2174

TERMS: Shipping & Handling Charge $2.50
Min. Charge Order $15.00

CIRCLE 13 ON FREE INFORMATION CARD

CIRCLE 64 ON FREE INFORMATION CARD

www.americanradiohistory.com

EKI
ELECTRONIC KITS INTERNATIONAL, INC.
(Formerly PPG Electronics)

NEW!
EKI
MICRO-MENTOR ™

COMPLETE COURSE WITH MICROPROCESSOR SYSTEM KIT

DISCOUNTS AVAILABLE TO EDUCATORS

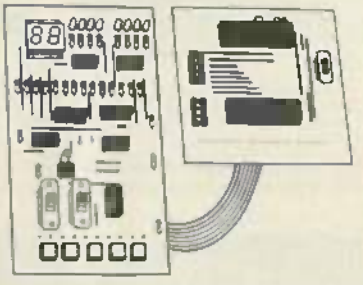

OVER 50 KITS AVAILABLE

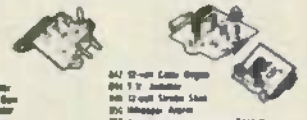

KIT #

FREE
CATALOG OF ALL KITS
Available nationwide at your local electronics store.
(Or send $1.00 shipping & handling to address below.)

EKI ELECTRONIC KITS
INTERNATIONAL, INC.
791 RED ROCK ROAD
ST. GEORGE, UTAH 84770
Call TOLL FREE
1-800-453-1708
For store nearest you.

Special Prices for Educators

CIRCLE 58 ON FREE INFORMATION CARD

SERVICE CLINIC

JACK OARR,
SERVICE EDITOR

Why do things the hard way?

THERE'S AN OLD LATIN SAYING THAT goes, "Essentia non sunt praeter necessitatem." All it means is *don't make things harder on yourself than you have to.* (In other words, do everything the easiest way!) In my own shop and several others, I've noticed that many technicians have a tendency to do things the hard way. They (and that includes myself) take a simple task and make it harder than it should be. However, that can be remedied by taking a little time (at the beginning of each job) to look for an easy way.

Troubleshooting shortcuts

Finding the easy way to solve a problem isn't always a simple proposition. It requires that you first do a little brain work and then pay strict attention to detail. (Translation: Look before you leap!)

For example, let's suppose you have a dead stereo. The hard way to fix it is to jump right in and take detailed voltage readings of every stage. But the easy way is to feed an audio signal to the input of the unit and use a scope to trace the signal through the many stages to find out where it stops.

Once you have found the malfunctioning stage, it is a simple matter to locate the cause by taking voltage measurements. A quick check of the emitter voltage of all transistors in a particular stage should point you in the right direction.

Figure 1 shows a schematic of a TV audio stage, which we'll use for our discussion. (Although that schematic is taken from a TV set, the principle that we'll discuss applies to stereo's as well.)

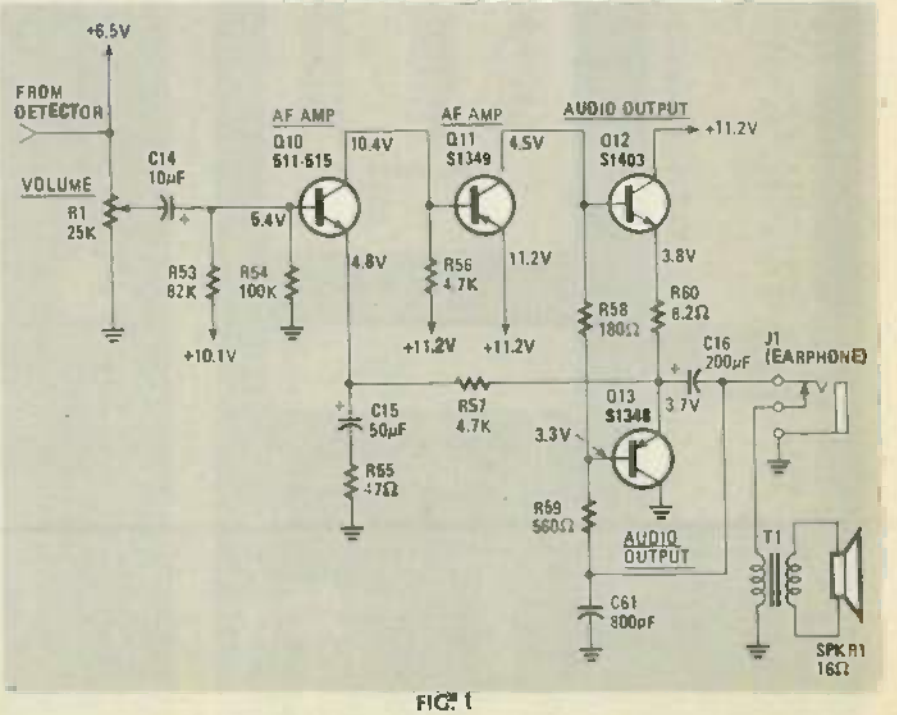

FIG. 1

www.americanradiohistory.com

Let's say, for instance, that you measure the voltage across the emitter resistor of transistor Q12 (see Fig. 1) and find it to be zero when it should be 3.8 volts. You already know that a signal is being applied to the base of the transistor. That simple voltage measurement should have told you that the transistor is not drawing any current because the emitter voltage is usually the drop across the emitter resistor.

Looking at the other side of the coin, what if there is no emitter resistor (as is the case with Q11)? A little thought should tell you to read the voltage drop across the load resistor (or any resistor that carries the collector current). If you find that there is no voltage drop, but the voltage is present, suspect an open transistor.

A mind-boggling problem

Here's another one for you: I didn't see this one myself, but I heard about it from a usually reliable source. The complaint was that there were several "jailbars" on a TV screen (20 of them, to be exact). The actual cause of the symptom was a broken ground on the coax that carries the signal from the tuner to the input of the IF. The cure is simple enough: Fix the ground and the symptom disappears. But, the thing that puzzled me was the number of bars!

The standard jailbar symptom, of course, comes from the 4–5 "rings" on the baseline of the horizontal pulse. They are at the flyback frequency, maybe 45–60 kHz. But why 20 bars? Twenty bars would mean that the frequency was up somewhere around 3 kHz, but where would we get that?

Taking a guess at it, I suspect that the waveform of the solid-state horizontal stage may have generated it somehow by developing some sort of ringing on each transition of the signal (or something like that). But I never did find out. If any of you have run across that symptom and have managed to pinpoint the cause, I will be only too happy to print it and give you full credit for it. R.E

Qualitone

MONTHLY SPECIALS
MINIMUM ORDER $35.00

40 CHANNEL BLOCK CONVERTER
No. Q33
Fine Tuning Knob
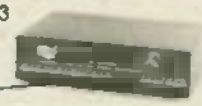
12.90 EA.

75/300 OHM MATCHING TRANSFORMER
No. Q34

40¢ EA.
MULTIPLES OF 10

TWO WAY UV SPLITTER
No. Q35
WITH GROUNDING BLOCK

75¢ EA.

WE SELL TO THE DEALER ONLY!
C.O.D. ORDERS - 800-431-2490
FOR FULL LINE 164 PAGE CATALOG
PLEASE USE BUSINESS CARD
OR LETTERHEAD

QUALITONE INDUSTRIES INC.
DEPT. C - 696 LOCUST ST. - BOX 214
MT. VERNON, NEW YORK 10552

CABLE CONVERTER PRICE SLASHERS

- 60 Channel Capacity
- P.L.L. Tuning
- 6 Channel Memory
- TV On-Off Feature
- Infra-Red Wireless Remote Control

ONLY $59.95
FACTORY REFURBISHED

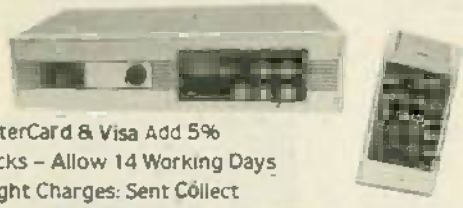

- MasterCard & Visa Add 5%
- Checks – Allow 14 Working Days
- Freight Charges: Sent Collect
- Order 20 or More – Freight Prepaid
- Special Price on New Factory Fresh Units – $69.95
- Warranty Not Valid After 15 Days From Receipt

OTHER MODELS ALSO AVAILABLE
Jerrold JRX-3 $49.95*
Jerrold RSC-3 $39.95*
Jerrold DRX-3 $69.95*
*Reconditioned Units With 30 Day Warranty

Phoenix Electronics
1 Midwood
Allendale, NJ 07401
(201)848-8229

RENAU ELECTRONIC LABORATORY

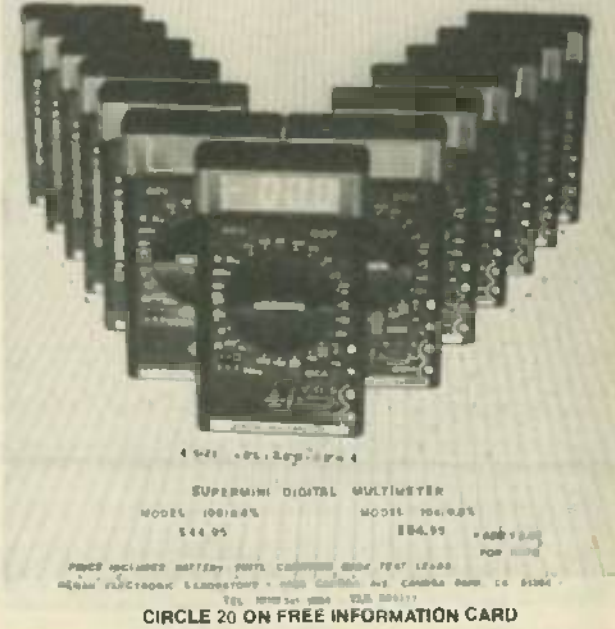

CIRCLE 20 ON FREE INFORMATION CARD

www.americanradiohistory.com

MARKET CENTER

FOR SALE

CABLE-TV Secrets—the outlaw publication the cable companies tried to ban. HBO, Movie Channel, Showtime, descramblers, converters, etc. Suppliers list included. $8.95. **CABLE FACTS**, Box 711-R, Pataskala, OH 43062.

RESISTORS ¼W&½W5% 3 cents. 1% metalfilms, precision custom wirewounds. $1.00 refundable to: **JR INDUSTRIES**, 5834-B Swancreek, Toledo, OH 43614.

FREE catalog featuring scanner accessories, carrier subcarrier detectors, voice scramblers, unusual kits. **CAPRI ELECTRONICS**, Route 1R, Canon, GA 30520.

TOKO COIL SET (four) $8.00. **BF085 substitute** transistor $2.00. **High quality PCB** with plated holes and reflow solder $12.00. Or all for only $20.00. **JIM RHODES**, 1025 Ransome Lane, Kingsport, TN 37660.

WHOLESALE F-59 cable connector $80.00/1000. Free MATV catalog SASE. (212) 897-0509. **D&WR**, 68-12,110 St., Flushing, NY 11375.

THE Intelligence Library—Restricted technical information & books on electronic surveillance, surveillance-device schematics, lock-picking, investigation, weapons, identification documents, covert sciences, etc. The best selection available. Free brochures. **MENTOR**, (Dept. Z), 135-53 No. Blvd., Flushing, NY 11354.

CABLE-TV equipment, notch filters for "beeping" channels. Information $1.00. **GOLDCOAST**, PO Box 63/6025 RE, Margate, FL 33063.

RF parts/Motorola transistors. MRF454 $16.00, MRF455 $12.00. Catalog available. **RF PARTS CO.**, 1320-4 Grand, San Marcos, CA 92069. (619) 744-0720.

CABLE CONVERTERS & DESCRAMBLERS
HAMLIN OAK JERROLD
SCIENTIFIC SYLVANIA ZENITH
ALL TYPES OF CABLE TV EQUIPMENT
MICROWAVE ANTENNAS & ACCESSORIES
— FREE ILLUSTRATED BROCHURE —
— CALL OR WRITE —
H M R SALES
221 E. CAMELBACK #1
PHOENIX, AZ 85012
(602) 993-0398

MILITARY radios: CPRC-26 infantry manpack radio, compact, transmits-receives 46-54 MHz FM, 6 channels, with battery box, antenna, crystal, handset: $22.50 apiece, $42.50/pair, good condition. R-390A premier communications receiver, .5-30 MHz shortwave, amateur frequencies, AM-CW-SSB, meters sealed (Government removed, operation unaffected), fair condition: $115.00 not checked; $175.00 checked. Shipping charges collect. **BAYTRONICS**, Box 591, Sandusky, OH 44870.

Govt. SURPLUS ELECTRONIC EQUIPMENT CATALOG
New ITEMS . . . New BARGAINS!
FREE SEND TODAY FOR FREE COPY OF CATALOG WS-84 AND SUPPLEMENT • ADDRESS: DEPT RE
FAIR RADIO SALES
1016 E. EUREKA • Box 1105 • LIMA, OHIO • 45802

To run your own classified ad, put one word on each of the lines below and send this form along with your check for $2.50 per word (minimum 15 words) to:
Radio-Electronics, 200 Park Avenue South, N.Y., N.Y. 10003

ORDER FORM

PLEASE INDICATE In which category of classified advertising you wish your ad to appear. For special headings, there is a surcharge of $20.00.

( ) Plans/Kits ( ) Business Opportunities ( ) For Sale
( ) Education/Instruction ( ) Wanted ( ) Satellite Television
( ) _____

Special Category: $20.00

PLEASE PRINT EACH WORD SEPARATELY, IN BLOCK LETTERS.

1	2	3	4	5
6	7	8	9	10
11	12	13	14	15
16	17	18	19	20
21	22	23	24	25
26	27	28	29	30
31	32	33	34	35

PLEASE INCLUDE FOR OUR FILES YOUR PERMANENT ADDRESS AND PHONE NUMBER.

CLASSIFIED COMMERCIAL RATE for firms or individuals offering comercial products or services) **$2.50 per word prepaid (no charge for zip code)...MINIMUM 15 WORDS.** 5% discount for 6 issues, 10% for 12 issues within one year, if prepaid.

NON-COMMERCIAL RATE (for individuals who want to buy or sell a personal item) $2.00 per word prepaid, no minimum.

ONLY FIRST WORD AND NAME set in bold caps. Additional bold face (not available as all caps) at 25¢ per word. All copy subject to publisher's approval. **ADVERTISEMENTS USING P.O. BOX ADDRESS WILL NOT BE ACCEPTED UNTIL ADVERTISER SUPPLIES PUBLISHER WITH PERMANENT ADDRESS AND PHONE NUMBER.** Copy to be in our hands on the 20th of the third month preceding the date of the issue (i.e., August issue closes May 20th). When normal closing date falls on Saturday, Sunday, or a holiday, issue closes on preceding working day.

ELECTRONIC Surveillance: Incredible books reveal secret technical information. Send SASE for details: **A.T.I.S.**, 61 Gatchell, Buffalo, NY 14212.

NEWEST cable-TV facts. Manual includes: theory, schematics of popular descramblers and converters, secret techniques and more. $11.00 cash. Free CATV equipment catalog. **ELECTRON**, Box 169, 17 No. State Street, Room 1222, Chicago, IL 60602.

LOWEST prices on many surplus items. Free flyer. **ELECTRONIX LTD.**, 3214 South Norton, Sioux Falls, SD 57105.

CORDLESS phone owners. Increase distance, reduce static on 1.7/49MHz phones. Details $1.00 refundable. **HP PHONES**, Box 273, Mesa, AZ 85201.

GATED-Sync Pulse instruction booklet. Don't be left out due to the advancing technology in video scrambling techniques. Learn by doing. Complete descrambling circuits included. For additional information, send SASE to **SOKOLOWSKI**, 97-20 221 Street, Queens Village, NY 11429.

UP to $500.00 per month. Sell computer software in your home. Write to: **COMPUTER SERVICES**, PO Box 7748, Tucson, AZ 85725.

RADAR JAMMER!

• Causes speed radar guns to read out either: —a percentage of your true speed, or whatever speed you dial in
• Activated by your Escort and most other detectors
• Especially effective against instant-on radar
• Operates on both X and K bands (not FCC approved)
• MONEY-BACK GUARANTEE, if not satisfied
WARNING: The device described in this literature is not legal for use against police radar.
Complete literature & plans package, send $14.95 to:
Philips Instrument Design Co. Inc.
9513 S.W. Barbur Blvd. #109S, Portland, OR 97219
VISA and M/C order line: (503) 626-6764

www.americanradiohistory.com

DELUXE cable/UHF converters. Zenith, SSAVI-1—$199.95. Zenith Cable—$229.95. Jerrold, Oak and others available. Dealers wanted. $2.00 catalog—**UNITED ELECTRONIC SUPPLY**, Box 1323, Elgin, IL 60121-0119. (312) 697-0600.

PICTURE flyer lists quality electronics surplus at low prices. Since 1970. Send for the last 3 issues. **STAR-TRONICS**, Box 683, McMinnville, OR 97128.

COCO owners—Free color computer software and hardware catalogue. **SPECTRUM**, Box 9866, San Jose, CA 95157-0866.

BREAKTHROUGH! Circuit quadruples solar cell voltage! 3 cell circuit unit $19.95. **ROSE**, POB 7464, Chula Vista, CA 92012.

INDIVIDUAL photofact folders. No. 1 to no. 1400, $3.00 postpaid. **LBT**, 414 Chestnut Lane, East Meadow, NY 11554.

9-CODE telephone scrambler, several new unscramblers for scanners, telephone and scanner accessories, tone encoders/decoders. All factory built. Free catalog. **KRYSTAL KITS**, PO Box 445, Bentonville, AR 72712. (501) 273-5340.

THE BEST PLACE to BUY, SELL or TRADE NEW and USED EQUIPMENT
NUTS & VOLTS MAGAZINE
BOX 1111-E • PLACENTIA, CA 92670
(714) 632-7721
Join Thousands of Readers Nationwide Every Month
ONE YEAR U.S. SUBSCRIPTIONS
$18.00 - 3rd Class • $15.00 - 1st Class
$31.00 - Lifetime - 3rd Class

CANADIANS. Pay-TV and satellite descramblers for all areas. Send $1.00 for details to **F.T. ELECTRONICS**, Box 2126, Niagara Falls, NY 14302.

ELECTRONICS test equipment. Catalog 25 cents. **EF ELECTRONICS**, 10 Afton, Aurora, IL 60538.

ENERGY saver. Save $ from your energy cost. Send $3.00, refunded. **COMPUTER-PRODUCTS**, 246 W. Garfield, Freeport, IL 61032.

COMPUTER display enhancer only $49.50. Visa accepted, (201) 627-0290, **COMPONENTS CORP.**, Denville, NJ 07834.

CHANNEL 3—60dB notch filter 63.5MHz. $32.00. **CROSLEY**, Dept. 763, Box 840, Champlain, NY 12919.

IC's at low prices! 74LS374, 74LS245, MC6800 $1.95! MC1488, MC1489 2/99 cents! LM741 TO5 or minidip 5/99 cents! 5 volt 2716, Z80A-SIO, Z80A-PIO, 6802 $1.95! TMS2716 99 cents! Guaranteed IC's removed from sockets. Pay by MasterCard, Visa. Free catalog. **ERM**, 27 Water St., Wakefield, Mass 01880. (617) 246-3550.

UHF Descramblers. Gated, sinewave, Zenith. Low prices! Free information. Catalog $1.00. Dealers wanted! Visa/MasterCard. AIS SATELLITE, Box 1226-S, Dublin, PA 18917, (215) 249-9411.

RECONDITIONED test equipment. $1.00 for catalog. **JAMES WALTER TEST EQUIPMENT**, 2697 Nickel, San Pablo, CA 94806.

A SINGER'S DREAM!

REMOVES VOCALS FROM RECORDS!
Now You can sing with the world's best bands! The **Thompson Vocal Eliminator** can remove most or virtually all of a lead vocal from a standard stereo record and leave the background!
Write or call for a free brochure and demo record.
LT Sound, Dept. R-1, P.O. Box 338, Stone Mountain, GA 30086. (404) 493-1258

BIGGEST TI-99/4A selection. Newest exciting software and hardware bargains. Hard to get items. Send for free catalog. Fast service. **DYNA**, Box 690, Hicksville, NY 11801.

WANTED: Old RCA, Cunningham, Western Electric, tubes, amplifier, speakers, McIntosh, Marantz, Tannoy, Altec, JBL. (713) 728-4343, **MAURY CORB**, 11122 Atwell, Houston, TX 77096.

TOP-quality imported, domestic kits, surplus, discount electronics, computer componets. Free catalog. **TEKTRASONIX**, 175 Fifth Ave., Suite 3194, N.Y., NY 10010.

CABLE-television facts and secrets. Now you can get the informative publication that CATV companies have been unsuccessfully trying to get banned for 15 years. Movie Channel, HBO, and Showtime converters, etc. Send $8.75 to: **CABFAX**, P.O. Box 091196, Bexley, OH 43209.

WRITE FOR McGEE'S
SPEAKER & ELECTRONICS CATALOG
1001 BARGAINS IN SPEAKERS
Tel.: 1 (816) 842 5092
1901 MCGEE STREET KANSAS CITY, MO. 64108

LATEST bug-detection equipment for home or office. Literature, $1.00. **CLIFTON**, Box 220-X, Miami, FL 33168.

BRADFORD parts 50% off—"JOE," **TROY TV PARTS**, 76 Second Ave., Troy, NY 12180

Active

The One Stop Electronic Shop!

Call Toll FREE 1-800-343-0874

In the United States:

Mail Orders
P.O. Box 8000
Westborough, Mass.
01581
(Mass) (617) 366-0500

Boston
133 Flanders Road
Westborough, Mass.
01581
(617) 366-9684

Seattle
13107 Northup Way
Bellevue, Wash.
98004
(206) 881-8191

In Canada:

Montréal
5651 Rue Ferrier
Montréal, Québec
H4P 1N1
(514) 731-7441

Toronto
14 Carlton Street
Toronto, Ontario
M5B 1K5
(416) 977-7692

Downsview
86 St. Regis Cr. N.
Downsview, Ontario
M3J 1Y8
(416) 630-0400

Ottawa
1023 Merivale Road
Ottawa, Ontario
K1Z 6A6
(613) 728-7900

Calgary
3220-5th Ave. N.E.
Bay 2
Calgary, Alberta
T2A 5N1
(403) 235-5300

Vancouver
3070 Kingsway
Vancouver, B.C.
V5R 5J7
(604) 438-3321

Visit your nearest Active store, call, write or circle the Reader Service Card for your copy of Active's new catalog.

CIRCLE 77 ON FREE INFORMATION CARD

www.americanradiohistory.com

TECNICA 140 channel cable converter fully remote sound and video unit only $149.00. **Jerrold** LCC58 converter only $79.00. **Jerrold** DRZ450 converter 90 channel auto tuning only $89.00. All units carry full manfacturers warranty specials while they last. For catalog send $3.00. Thanks. **REDCOAT ELECTRONICS**, 104-20 68th Drive, Forest Hills, NY 11375. (212) 459-5088.

TUBES, new, unused. Send self-addressed, stamped envelope for list. **FALA ELECTRONICS**, Box 1376-2, Milwaukee, WI 53201.

FREE Pay-TV reception. "How-To" book. HBO, Showtime, Cinemax. $4.95. **DIPTRONICS**, Box 80 (R3), Lake Hiawatha, NJ 07034.

CABLE-TV converters and descramblers. Low prices, dealers wanted. Send $5.00 for catalog. **R & M DISTRIBUTORS**, Box 266-1, Boston, MA 02190. (617) 871-5838.

CONVERTERS all types for all systems. Lowest prices anywhere, quantity discounts, dealer inquiries accepted. Send $1.00 for catalog. **PG VIDEO CORP.**, PO Box 296, Latham, NY 12110. (518) 274-6593.

CABLE-TV products. Jerrold, Hamlin, and Oak converters. Send $3.00 for information. **ADDITIONAL OUTLET CORP.**, 1041 W. Commercial Blvd., Ft. Lauderdale, FL 33309.

AUTOMOTIVE Security Catalog. 1984, 24-page color catalog, $2.00. **ASE**, Dept. 1, PO Box 382, Plainview, NY 11803.

PLANS AND KITS

PRINTED-circuit boards. Quick prototypes, production, design, reflow solder. Send print or description for quote to **KIT CIRCUITS**, Box 235, Clawson, MI 48017.

CRYSTAL radios! Plans! Kits! Plans and catalog $3.00. **COUNTRY CRAFTS INC.**, Box 310, Edgewood, NM 87015.

DESCRAMBLER kits repaired for February's issue $24.00 parts & labor, $2.50 S&H, for details send $1.00 (offer void in Massachusetts.) **NORTH EASTON ELECTRONICS**, PO Box 534, North Easton, MA 02356.

FREE KIT Catalog

FUNCTION GENERATOR KIT $59.95
Auto-Ranging Cap-meter kit $79.95

Phone 209-772-2076

Write or Phone for FREE CATALOG

contains TEST & EXPERIMENTER'S EQUIP.

DAGE SCIENTIFIC INSTRUMENTS
BOX 144 VALLEY SPRINGS CA 95252

CATALOG: Hobby, CB broadcasting! Linears, transmitters, bugs, scramblers, downconverters, antennas, modifications, more! **PANAXIS**, Box 130-F11, Paradise, CA 95969.

DESIGN your regulated DC power supply. Practical procedure—$10.00. Or I will design to your specs. Free quote, **JADKO**, Box 397, Calimesa, CA 92320.

COMMODORE 64 owners protect your investment with V-Guard Crowbar Kit $14.95 assembled $24.95, or send $1.00 for details and parts list. **IRC**, Box 60, Mason, OH 45040.

Z-80 control board—assemble with your parts. Takes up to **8K EPROM, 16K RAM.** Bare board $29.95. Send $5.00 for schematic/parts list—refunded with first board order. **OMNI SYSTEMS**, PO Box 29347, Minneapolis, MN 55430.

DESCRAMBLER plans. New design decodes gated sync suppressed signals—newest pilotless method. Circuit boards, most parts from Radio Shack. Detailed theory, drawings, schematics, instructions $14.95 plus $2.00 shipping. **DIRIJO CORP.** Box 212, Lowell, NC 28098.

DIGITAL Klock kit plays 1-of-12 different melodies on the quarter hour. Displays time, date, and other features. Send $2.00 for complete assembly and plans and pricing to **KERBER KLOCK KO.**, 36117 Hillcrest, Eastlake, OH 44094.

SPEECH synthesizer—unlimited vocabulary. Schematics and programs for Apple, VIC, Comm 64, TRS80, and color computer, $6.00. **Talking Clock** for VIC, Comm 64, $3.00. All Radio Shack parts. **MICROTALK**, 39 Raymond St., Providence, RI 02908.

CABLE-TV converters: Jerrold, Hamlin, SB-3, AN-3, Mini-Code, Zenith & more. UHF converters: Deluxe II sinewave kits 595.00, gated pulse add'on $70.00. Complete units $195.00 with gated pulse $255.00. (Quantity discounts.) Repairs of all converters & cable boxes. Send SASE (54 cents postage) or call for info. 1 (312) 637-4408. **HIGGINS ELECTRONICS**, 6014 W. Nelson, Chicago, IL 60634.

PROJECTION TV...Convert your TV to project 7 foot picture...Results comparable to $2,500.00 projectors...Total cost less than $30.00...Plans and 8" lens $19.95...Illustrated information free. **MACROCOMA-GC**, Washington Crossing, PA 18977. Creditcard orders 24 hours, (215) 736-3979.

HI-FI speaker kits, auto speaker systems and speaker components from the world's finest manufacturers. For beginners and experts. Free literature. **A & S SPEAKERS**, Box 7462R, Denver, CO 80207 (303) 399-8609.

COMPUTER—laser disk interface, build your own. Schematics, parts list and sample program $12.00. **IRATA**, 2562 East Glade, Mesa, AZ 85204.

QUALITY printed-circuit boards, 15 cents sq-in. Free drilling. Quantity discounts. **INTERNATIONAL ENTERPRISE**, 6452 Hazel Circle, Simi Valley, CA 93063.

DELUXE II sine wave descrambler board owners, improve reception distance, picture quality and stability with 8 circuit revisions $9.95. A pulse suppressed descrambler design for the above board $7.95. **G & M**, Box 335, Rising Sun, MD 21911.

NEW! Multi-function kit with impressive sound quality. Converts mono to stereo, or enhances stereo with two distinct modes. Gives 3 dB. Gain between 30-20KHz. $39.95 plus $2.50. California add 6.5%. **SINETRON**, PO Box 661571, Sacramento, CA 95866.

hobbyist DREAM COME TRUE
PERFECT TRAINING TOOL
low cost lab EQUIPMENT

SAVE MONEY TIME

Use ProtoMate $xxx.xx
AN UNIQUE design aid
COMBINING multiple EQUIPMENTS

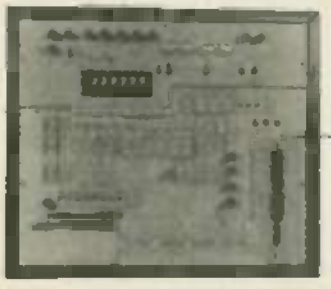

Size 13¾ in X 15¾ in X 3 in

FEATURES ARE:
- 2 FUNCTION GENERATORS AM, FM
- VOLTAGE TO FREQUENCY CONVERTER
- DC VOLTMETER
- ±12V, +5V POWER SUPPLIES
- FREQUENCY COUNTER
- PERIOD COUNTER
- PRESETABLE DECIMAL COUNTER
- CRYSTAL OSCILLATOR
- INTERFACE DRIVERS
- LOGIC PROBE
- 5 WAY GENERAL PURPOSE TERMINALS (OPT)
- 10 OP AMPS
- CONSTANT CURRENT SOURCE

DEALERS INQUIRIES WELCOME
CA residents add 6½% sale tax
add shipping charge $5 ups / $8 ups blue

ER ELECTRON RESEARCH
P.O. BOX 23008 SANJOSE CA 95153
TEL: 408-224-8206
420 CONESTOGA WAY, SAN JOSE, CA 95138

CIRCLE 22 ON FREE INFORMATION CARD

SATELLITE TELEVISION

UNSCRAMBLE secret satellite channels watch all the good stuff. Plans $19.95—kits $169.95—complete units $395.00—Details and order forms $3.00. **SCRAMCO**, 8688 Royal Drive, Noblesville, IN 46060.

GEARMOTORS for motorized satellite antenna projects, 110VAC, 10RPM: $32.50 plus $4.00 shipping. Actuators 36VDC, 18": $139.00 plus $10.00 shipping. **TEM**, 22518 97th, Corcoran, MN 55374. (612) 498-8014.

SATELLITE TV! Lowest prices, absolutely complete systems! Major brands. Free information. Complete installation/programming guide $3.00. Dealers wanted. Visa/MasterCard. **AIS SATELLITE**, Box 1226-R, Dublin, PA 18917, (215) 249-9411.

Satellite Descramblers

For West Star 5
COMSTAR D4
Movies Movies Movies

Send $5.00 for information
Modern Technology
P.O. Box 419 D1
Boston, Ma. 02186
(617) 871-5838

www.americanradiohistory.com

ADVANCED COMPUTER PRODUCTS

SEND $2.00 FOR 1984 CATALOG

RAM UP-GRADES

64K D RAM (4164-200nS)

9 pcs for $50.00

16K D RAM (4116-200nS)

8 pcs for $12.95

REPEAT OF SELL-OUT

58 Key Unencoded Keyboard

$19.95 ea.

This is a new 58 key terminal Keyboard manufactured by a major manufacturer. It is uncoded with 5PST keys unattached to any PC board. Solid molded plastic base measures 11" x 4"

Unencoded Key Pad

15 key Keypad with 1-10 keys and 5th, minus, (-), (.) and (+) only **$9.95** ea.

STEPPER MOTOR

Operates by applying 12VDC + and direction and step reversing polarity for square signal. Uses +12VDC. Clock Was Received. Rated 3 ROM at 4 P.P.S. with a 5 degree stepping angle

ACP Price **$3.95**

10 for $34.95

RS232 SIGNAL TESTER

COEX RS232 LINE TESTER (7) LED Indicators Only **$24.95**

Other Styles Also Available

UV "EPROM" ERASER

Model DE-4 **$89.95**

Holds 4 EPROMS at a time

Model S-52T $325.00

CONNECTORS

DB25P (RS232)	$2.95
DB25S Female	3.25
Hood	1.45
Set with Hood, Sets	6.95
75 50 S-T, Apple	3.95
25-50 W/W, Apple	4.95
31/62 S-T, IBM	4.95
31/62 W/W, IBM	5.95
50-100 W/W, S-100 Connector	4.95
50-100 S/T, S-100 Connector	5.95

CORCOM FILTER

Popular CORCOM Filter

6 amps **$4.95**

Compatible Line Cord Add $3.00

SWITCHER SPECIAL

by ASTEC

Originally designed for the Apple II+

- 5 @ 6.0A
- 5 @ 2.5A
- +12 @ 2.5A
- -12 @ .3A

only **$49.95**

MISC HI-TECH

MM5740AAC	9.95	3341FIFO	$4.75
AY5 2376	13.75	2513-001UC	9.50
AY5 3600	13.75	2513-002U,C	9.50
UPD7201	29.95	7107CPL	11.50
ULN2003	2.25		

WE STOCK 74HC & 74C CMOS

PALS

PAL10H8	$3.75	PAL14L4	$3.95
PAL12H6	3.95	PAL16L8	9.95
PAL14H4	3.95	PAL16R8	7.75
PAL10L8	3.95	PAL16R6	7.75
PAL12L6	3.95	PAL16R4	7.75

FONCTION GEN

MC4024	$3.75	LM566	$1.95
8038	3.75	XR2206	3.75

UARTS USARTS

AY5-1013A	$3.95	2350	$8.75
AY5-1014A	6.75	8250	12.50
AY5-1015	6.75	8402	7.75
TR1602A	3.75	8403	8.75

BAUD RATE GEN

MC14411	$11.50	COM5018	$15.95
BR1941	10.50	COM8116	11.95
34702	12.75	MM5307	11.95

SOUND CHIPS

76477	$3.50	MC3340	$1.95
76488	5.00	SC-01 Votrax	39.95
76489	8.50	DT1050	
AY38910	8.95	Digitalker	34.95
AY38912	12.50	MM54104	14.95

CRT CONTROLLERS

6845	$14.75	8275	$34.95
68B45	17.50	7220	99.50
6847	11.50	COM5027	17.95
HD46505SP	15.75	COM5037	22.00
MC1372	6.75	8350	39.95
TMS9918	39.95	9845	21.50

DATA ACQUISITION

DAC01	$5.95	ADC0800	$15.25
DAC08	7.50	ADC0804	3.95
DAC100	7.50	ADC0808	4.95
DAC0800	4.95	ADC0817	9.95
DAC0808	2.95	MC3470	4.95
DAC1020	8.95	1408L8	1.50
DAC1022	5.95	1408L6	2.95
F8708	4.95	DAC88EX	6.95

DISK SUPPORT

1691	$16.95	2791	$49.50
1771	16.00	2793	49.50
1791	22.95	2795	56.50
1793	25.95	2797	56.50
1795	21.95	6843	31.50
1797	44.50	8272	36.00
2143	19.95	UPD765A	39.00

INTERFACE

75189	$1.10	8795	6.95
75189	1.19	8796	8.95
8726	1.75	8797	9.95
8T28	1.85	8798	8.95
8T31	2.75	75150	1.50
8630	3.75	75154	1.50
8637	3.75		

CLOCK CHIPS

MM5369	$3.50	MM58174	$10.95
MM58167	11.95	MSM5832	3.95

OSCILLATORS

1.000	$10.95	8.000	$10.95
1.8432	10.95	10.000	10.95
2.000	10.95	12.000	10.95
4.000	10.95	18.000	10.95
5.000	10.95	18.432	10.95
5.0688	10.95	19.6608	10.95
6.000	10.95	20.000	10.95
6.144	10.95	22.1184	10.95

ZERO INSERT SOCKETS

14PIN21F	$0.75	24PIN21F	$2.95
16PIN21F	5.95	28PIN21F	8.50
18PIN21F	7.75	40PIN21F	10.75
20PIN21F	7.95	64PIN21F	19.95

MICROPROCESSORS

WE STOCK IN DEPTH
CALL FOR VOLUME PRICING

EPROMS

2708	$4.75	2732	$4.75	2764-250	$7.75
2708	3.95	2732-250	5.95	2764-200	10.95
2758	4.95	2732-200	8.95	68764	29.95
2716	3.95	2732A	6.75	68766	21.95
2716-1	5.75	2732A	8.75	27128	27.95
TMS2716	7.50	2732A-2	13.95	27256-3	14.95
TMS2516	5.75	2764	6.75	68A09	19.95
TMS2532	5.75				

STATIC RAMS

2101	$2.75	2147	$4.75	5516	$11.95
2102-1	.89	2016-200	4.95	6116-4	4.95
2102L-4	1.29	2016-150	5.95	6116-2	6.75
2102L-2	1.49	2016-100	6.95	6116LP-4	5.50
2111	2.75	4044-4	3.95	6116LP2	10.95
2112	2.95	4044-2	8.50	2B132	32.50
2114	1.49	4118	8.95	HM6264	47.50
2114L-2	1.89	5814	3.50	6167	8.95

DYNAMIC RAMS

MK4027	$1.89	4116-200	$1.49
UPD410	8.95	4164-200	5.95
UPD411	4.95	4164-150	6.75
MM5290	2.95	MC6605	6.50
MM5290	1.49	TMS4164-15	6.50
MM5298	1.49	41256	79.95

WE STOCK MOST OBSOLETE RAMS. CALL FOR YOUR HARD TO FIND PARTS

8000 SUPPORT

8155	$8.95	8238	$4.75	8271	$74.95
8156	8.95	8243	8.50	8272	37.50
8202	23.50	8250	10.50	8275	34.95
8203	39.50	8251	5.95	8279	8.95
8205	3.25	8251A	9.95	8279-5	9.95
8212	1.95	8253	6.50	8282	7.95
8214	4.50	8253-5	8.95	8283	7.95
8216	3.95	8255	5.95	8284	7.95
8224	2.20	8255A	8.95	8288	7.95
8226	2.75	8257	7.25	8287	7.95
8228	3.35	8257-5	8.95	8288	24.95
8237	16.50	8259	7.25	8289	44.50
8237-5	21.50	8259-5	37.50		

6500 SUPPORT

6520	$4.25	6532	$8.75	6545A	$26.50
6522	6.75	6532A	11.75	6551	11.50
6522A	8.50	6545	21.50	65516	12.95

6800 SUPPORT

6810	$2.75	68B40	$17.95	68B50	$6.75
68B10	6.75	6843	31.50	6852	6.50
6820	4.25	6844	25.00	6860	7.75
6821	3.75	6845	14.75	8875	6.25
68B21	6.75	68B45	17.50	6880	2.65
6839	12.50	6847	12.75	68047	22.95
6840	12.50	6850	3.50	68488	19.50

Z-80 SUPPORT

Z80CTC	$3.75	Z80DART	$16.75	Z80ABIO	$19.95
Z80ACTC	4.75	Z80ADART	18.95	Z80BIO	11.95
Z80BCTC	9.75	Z80BDART	19.95	Z80ABIO-2	12.95
Z80PIO	5.95	Z80BIO	11.95	Z80BBIO-2	26.95
Z80APIO	6.75	Z80ABIO	13.95	Z80SIO	11.50
Z80BPIO	12.50	Z80BIO-1	11.95	Z80ASIO-2	12.95

SOCKETS

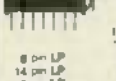

LOW PROFILE SOCKETS (TIN)

	1-24	25-49	50-100
8 pin LP	.16	.15	.14
14 pin LP	.20	.18	.16
16 pin LP	.22	.21	.20
18 pin LP	.29	.28	.27
20 pin LP	.34	.32	.30
22 pin LP	.29	.27	.24
24 pin LP	.38	.37	.35
28 pin LP	.45	.44	.43
40 pin LP	.38	.36	.35

3L WIREWRAP SOCKETS (GOLD)

	1-24	25-49	50-100
8 pin WW	.66	.64	.63
90 pin WW (TP)	.68	.63	.58
14 pin WW	.75	.73	.67
16 pin WW	.80	.77	.70
12 pin WW	.95	.90	.81
20 pin WW	1.15	1.08	.98
22 pin WW	1.45	1.35	1.23
24 pin WW	1.36	1.28	1.14
28 pin WW	1.80	1.63	1.38
40 pin WW	2.20	2.01	1.88

LINEAR

555	$.95	LM1458N	$1.00
556	1.49	LM1458CN-N	.49
709 D.I.	1.49	MC1488N	.99
LM108AH	2.95	MC1489N	.99
LM300H	.89	LM1496M	.89
LM301CN	.35	LM1596N	1.50
LM304H	1.39	LM1620N	.95
LM305H	1.00	LM1850N	.95
LM308H	3.75	LM1889N	3.10
LM307CN	.29	LM2111N	1.75
LM308CN	.89	LM2900N	.99
LM308K	1.49	LM2901N	2.50
LM310CN	1.25	LM2917N	2.95
LM311DCN	.89	CA3013T	2.19
LM318H	5.75	CA3018T	1.89
LM317T	1.79	CA3021T	2.49
LM318CN	1.49	CA3023T	2.99
LM318N	1.25	CA3035T	2.75
LM320K-XX	1.39	CA3039T	1.79
LM330T-XX	1.39	CA3046N	1.29
LM340H-XX	1.25	LM3053N	1.49
LM223K	4.95	CA3068N	2.19
LM324N	.89	CA3080N	3.19
LM337K	5.95	CA3082N	4.95
LM338K	6.95	LM3065N	1.49
LM339N	.95	CA3080T	1.29
LM340K-XX	1.75	CA3081N	1.69
LM340T-XX	1.75	CA3082N	1.99
LM340H-XX	1.25	CA3083N	1.56
LM344N	1.89	CA3086N	.89
LM348N	1.39	CA3088N	2.99
LM358N	5.00	CA3089N	5.49
LM362CN	.99	CA3097N	1.99
LM365N	2.49	CA3130T	1.39
LM372N	1.95	CA3140T	1.19
LM376N	3.75	CA3146N	2.49
LM377N	2.75	CA3160T	1.19
LM380CN-N	1.25	CA3180N	1.95
LM381N	5.75	CA3410N	.89
LM383T	1.95	MC3423N	5.49
LM386N	1.25	MC3480N	3.95
LM387N	1.49	SG3524N	3.99
LM389N	1.95	CA3600N	3.39
NE531V-T	3.75	LM3800N	.99
NE555V	.39	LM3805N	9.19
NE556N	.89	LM3909N	.89
NE561T	19.95	LM3914N	3.75
NE565N-N	1.25	LM3915N	3.95
NE566N-V	1.75	LM3916N	3.75
NE567V-N	1.50	RC4151N	2.95
NE5534N	2.75	RC4136N	1.19
LM702H	1.89	RC4151N	3.79
LM709N-N	.79	RC4194TK	6.95
LM710N-N	.79	RC4195TK	5.49
LM711N-N	.89	ULN2001	1.25
LM715N	1.95	ULN2003	1.50
LM723N-N	.89	SN75450N	.89
LM733N-N	.89	SN75451N	.35
LM739N	1.15	SN75452N	.49
LM741CN-N	.33	SN75453N	.49
LM741CN-14	.18	SN75454N	.49
LM747N-N	.75	SN75491N	.89
LM748N-N	.89	SN75492N	.89
LM760CN	2.89	SN75493N	.89
LM1310N	1.89	SN75494N	.89
MC1330	1.09	TL494CN	4.20
MC1350	1.95	TL498CP	1.65
MC1358	1.75	TL497	9.95

74S00

74S00	$.39	74S124	$3.99	74S344	$2.99
74S02	.43	74S133	.54	74S251	1.35
74S03	.43	74S134	.85	74S253	1.35
74S04	.88	74S135	1.15	74S257	1.29
74S05	.52	74S138	1.05	74S258	1.39
74S08	.49	74S139	1.95	74S280	.79
74S09	.49	74S140	1.39	74S288	2.79
74S10	.42	74S140	.73	74S287	2.99
74S11	.42	74S151	1.29	74S288	2.85
74S15	.42	74S153	1.29	74S373	3.10
74S20	.42	74S157	1.09	74S374	3.19
74S22	.42	74S158	1.29	74S387	2.75
74S30	.42	74S160	2.79	74S471	7.95
74S32	.49	74S174	1.49	74S472	7.95
74S38	1.19	74S175	1.49	74S473	7.99
74S40	.49	74S188	2.89	74S474	9.95
74S51	.42	74S194	1.89	74S475	8.95
74S64	.49	74S195	1.89	74S570	5.75
74S65	.46	74S196	1.89	74S571	5.75
74S74	.89	74S240	2.75	74S572	6.95
74S86	.72	74S241	2.79	74S573	8.95
74S112	.78	74S242	2.99	74S640	2.89
74S113	.72	74S243	2.99	74S641	2.99
74S114	.72				

DIP SWITCHES

2 Position	$.99	7 Position	$1.39
4 Position	1.19	8 Position	1.49
6 Position	1.29	9 Position	1.65
6 Position	1.35	10 Position	1.69

MUFFIN® FAN

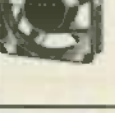

The dependable, low cost, largest selling fan for commercial cooling applications

- 105cfm free air delivery
- 4.68" sq. x 1.89" deep
- Weight - 17 oz.

SPECIAL PURCHASE

$9.50 ea.

★ CRYSTALS ★

32.768KHz	$1.95	2.4576	$2.95	5.7143	$2.95	14.318MHz	$2.95
1.000MHz	3.75	3.2768MHz	2.95	6.000MHz	2.95	16.000MHz	2.95
1.8432MHz	3.75	3.5795MHz	1.95	6.144MHz	2.95	18.000MHz	2.95
2.000MHz	2.95	4.000MHz	2.95	6.5536MHz	2.95	18.000MHz	2.95
2.0108MHz	2.95	5.000MHz	2.95	8.000MHz	2.95	19.432MHz	2.95
2.097152MHz	2.95	5.0688MHz	2.95	10.000MHz	2.95	32.000MHz	2.95

74LS00

74LS00	$.26	74LS113	$.39	74LS245	$2.99
74LS01	.25	74LS114	.39	74LS247	1.19
74LS02	.28	74LS122	.69	74LS248	1.19
74LS03	.25	74LS123	1.19	74LS249	1.19
74LS04	.69	74LS124	2.75	74LS251	1.49
74LS05	.25	74LS125	.69	74LS253	1.49
74LS08	.25	74LS126	.49	74LS257	.99
74LS09	.25	74LS132	.89	74LS258	.99
74LS10	.25	74LS136	.49	74LS259	2.89
74LS11	.39	74LS138	.99	74LS260	.69
74LS12	.33	74LS139	.99	74LS261	2.49
74LS13	.39	74LS145	1.25	74LS266	.99
74LS14	.89	74LS148	1.49	74LS273	1.75
74LS15	.33	74LS151	.89	74LS275	9.49
74LS20	.25	74LS153	.89	74LS279	.99
74LS21	.29	74LS156	1.79	74LS283	.89
74LS22	.29	74LS157	1.19	74LS290	.99
74LS26	.29	74LS158	1.49	74LS293	.99
74LS27	.29	74LS160	1.49	74LS295	1.19
74LS28	.29	74LS166	1.49	74LS298	1.19
74LS30	.25	74LS168	1.49	74LS324	1.19
74LS32	.28	74LS169	1.49	74LS352	1.19
74LS33	.35	74LS170	1.49	74LS353	1.19
74LS37	.35	74LS173	1.49	74LS363	1.49
74LS38	.39	74LS174	.89	74LS365	.99
74LS40	.25	74LS175	.89	74LS366	.99
74LS42	.89	74LS181	2.49	74LS367	.99
74LS47	.79	74LS189	1.19	74LS368	.99
74LS48	.79	74LS190	1.19	74LS373	1.95
74LS51	.25	74LS191	1.19	74LS374	1.95
74LS54	.25	74LS192	1.19	74LS375	.89
74LS55	.25	74LS193	1.19	74LS377	1.95
74LS73	.29	74LS194	1.19	74LS378	1.95
74LS74	.29	74LS195	.95	74LS379	1.95
74LS75	.29	74LS196	1.19	74LS381	1.95
74LS76	.29	74LS197	1.19	74LS382	1.95
74LS78	.45	74LS221	1.39	74LS386	.49
74LS83	.49	74LS240	1.49	74LS390	1.95
74LS85	.89	74LS241	1.49	74LS393	1.95
74LS86	.29	74LS242	1.49	74LS395	1.95
74LS90	.49	74LS243	1.49	74LS398	2.95
74LS92	.49	74LS244	1.49	74LS399	1.95
74LS93	.49	74LS245	2.99	74LS670	2.95
74LS95	.79	74LS249	1.89	74LS682	1.89
74LS96	.89	74LS240	1.99	74LS683	1.99
74LS107	.39	74LS243	1.99	74LS867	1.69
74LS109	.39	74LS244	1.99	74LS868	1.69
74LS112	.39	74LS27521	3.95	74LS27568	4.95

CMOS

4000	$.29	4037	$1.95	4081	$2.95
4001	.24	4040	.79	4083	.45
4002	.24	4041	.79	4084	2.95
4006	.79	4042	.85	4085	2.79
4007	.25	4043	.85	4093	1.95
4008	.85	4044	.89	14408	12.95
4009	.39	4046	.80	14408	12.95
4010	.39	4047	.89	14410	12.95
4011	.24	4048	.89	14412	12.95
4012	.24	4049	.39	14415	6.95
4013	.35	4050	.34	14418	4.95
4014	.79	4051	.79	4501	.39
4015	.89	4052	.79	4502	.85
4016	.39	4053	.79	4503	.85
4017	.85	4055	2.95	4505	6.95
4018	.79	4056	2.95	4506	.79
4019	.39	4058	9.25	4507	.95
4020	.89	4060	.85	4508	1.25
4021	.89	4066	.39	4510	.79
4022	.89	4068	.39	4511	.79
4023	.25	4070	.39	4512	.79
4024	.59	4071	.39	4514	1.19
4025	.39	4072	.29	4516	1.79
4027	.45	4073	.39	4516	1.45
4028	.85	4075	.29	4518	.85
4029	.79	4078	.75	4520	.79
4030	.45	4077	.35	4566	.95
4031	3.25	4078	.35	4536	.89
4032	2.15	4081	.29	4566	2.89
4034	1.81	4082	.29	80C95	1.50
4035	.79	4086	.95	80C97	1.39

TERMS: MO, Cashier's Check, Bank Wire. Personal checks allow 2 weeks for processing. Include Drivers License and credit card #'s. We ACCEPT C.O.D. and 3% service charge. Add 3% shipping & handling or $2.50 whichever is greater. Add 10% for foreign orders or US Parcel Post. Include Telephone number. NO CODs. Prices subject to change without notice. Some items subject to prior sale. We reserve the right to substitute manufacturer. Prices good now only.

TOLL FREE
800-854-8230
TWX
910-595-1565

Mail Order: P.O. Box 17329 Irvine, CA 92713
Retail: 13108 E. Edinger, Santa Ana, CA 92705
(714) 558-8813
542 W. Trimble, San Jose, CA 95131
(408) 946-7010

CIRCLE 80 ON FREE INFORMATION CARD

www.americanradiohistory.com

MULTI channel microwave antennas, highest quality, low prices, dealers welcome. D.T. compact $38.00, PT-1 $48.00, SR-1 $65.00, D.T. grid $69.00, PTS-33 $75.00, all units complete. **DAISY TENNA**, Box 42010, Phoenix, AZ 85080, (1-800) 874-9033.

SATELLITE-TV receiver breakthrough! Build your own system and save! Instruction manuals, schematics, circuit boards! Send stamped envelope: XANDI, Box 25647, Dept. 21E, Tempe, AZ 85282.

ENJOY SATELLITE TV

Save money with easy, guaranteed, do-it-yourself antenna plans / kits. Electronic knowledge not necessary. Send $1.00 for catalog or $8.95 for 1984 "Consumer Guide to Satellite Television."

GFI-D9
Box 9108
Missoula, MT 59807

BUSINESS OPPORTUNITIES

64K 6502/Z80 dual processor computer US$420.00. Hundreds Apple-compatible softwares. Details US$1.00. **RELIANT**, PO Box 33610, Sheungwan, Hong Kong.

BIG PROFITS

ELECTRONIC ASSEMBLY BUSINESS

Start home spare time investment knowledge or experience unnecessary. BIG DEMAND assembling electronic devices. Sales handled by professionals. Unusual business opportunity.

FREE: Complete illustrated literature
BARTA RE-O Box 248
Walnut Creek, Calif. 94597

BUY direct from Taiwan/Hong Kong. Details $1.00. Refundable. **TONY COLUCCI**, 56 Central Blvd., Merrick, NY 11566.

MECHANICALLY inclined individuals desiring ownership of small electronics manufacturing business—without investment. Write: **BUSINESSES**, 92-R, Brighton 11th, Brooklyn, NY 11235.

PROJECTION TV.. Make $$$'s assembling projectors...Easy...Results comparable to $2,500.00 projectors...Your total cost less than $20.00... **Plans, 8" lens & dealer's information $17.50**... Illustrated information **free... MACROCOMA GCX**, Washington Crossing, PA 18977. Creditcard orders 24 hours (215) 736-2880.

YOUR own radio station! AM, FM, cable, licensed, unlicensed, transmitter kits! Write: **BROADCASTING** Box 130-F11, Paradise, CA 95969.

BURGLAR alarm business booming. Tremendous employment-business opportunities. Get in now. Information $2.00. SECURITY, PO Box 1456-A, Grand Rapids, MI 49501.

PICTURE tube rebuilding equipment. Buy, sell, new/used machinery. Full training. **CHICAGO TELEVISION**, 633 North Semoran Blvd., Orlando, FL 32807, (305) 281-1260.

NEWSLETTERS

ELECTRONIC SYSTEMS NEWSLETTER is a monthly publication written especially for the electronics hobbyist/experimenter. Fascinating projects, new ideas, sources. Free details. **AF PUBLISHING**, Dept. R2, PO Box 524, So. Hadley, MA 01075.

EDUCATION & INSTRUCTION

F.C.C. General Radiotelephone license. Home study. Fast, inexpensive! "Free" details. **COMMAND**, D-91, Box 2223, San Francisco, CA 94126.

Get Your 2-Year ASSOCIATE DEGREE in ELECTRONICS TECHNOLOGY

No previous experience necessary... Train at home in spare time for exciting opportunities in fast-growing space-age industries. Automation, Aerospace, Cable-TV, Electronic Circuitry, Computers, and much more. No need to quit your job. Instructors are as close as your telephone ... we **pay the bill**. Send for free facts, color brochure. No salesman will call. **CDE Electronics Center**, Dept. DE-0A4 Scranton, PA 18515

REEL-TO-REEL TAPES

AMPEX professional series open reel tape, 1800-or 2400-feet on 7-inch reels, used once. Case of 40, $45.00. 10½ x 3600 feet and cassettes available. MasterCard/Visa. **VALTECH ELECTRONICS**, Box 6-RE, Richboro, PA 18954 (215) 322-4866.

SINE WAVE PROBLEMS

HOW (are they affecting your box?) **The Strike Back Mode**, $6.00, includes countermeasures. **Problem Manual** includes trouble shooting, alignment, antenna connections, theory, improvements, $8.00. Both, $12.00. **SIGNAL** Box 2512-R, Culver City, CA 90231.

GRAPHIC EQUALIZERS, ETC.

NOISE eliminators, expanders, power meters, others. Twelve-24 bands/channel equalizers from $89.00 Kit see R-E 5-6/78, 2/80, 3-4/81. Catalog: **SSS**, 856R Lynnrose, Santa Rosa, CA 95404. (707) 546-3895.

CABLE TV

DEALERS wanted: Channel 2, 3, and 4 notch filters. **Money back guarantee.** Send $15.00 for sample and quantity price list. Specify channel(s). **LEE KURTZ**, PO Box 291394, Davie, FL 33329.

INVENTORS!

IDEAS have value! Ever think of an idea, forget it, and see it later on the market? Many people don't forget, act quickly, and are rewarded by American industry. Write down your idea! We offer free disclosure registration and initial consultation regarding your idea's potential value. Call or write without delay for your free information package. **AMERICAN INVENTORS CORPORATION**, 82 Broad Street, Dept. RE, Westfield, MA 01088, (413) 568-3753. A fee based marketing company. Offices coast to coast.

UHF CONVERTERS/SATELLITE EQUIPMENT BY L.S.R. ENG.

CONVERTER kits with AGC and sound for TV (VCR recordable): Deluxe III Sinewave, $79.95 (wooden cabinet $12.50 extra). Digital Z/FV-5 video inversion **(includes cabinet) $175.00. Sinewave adaptor for Z/FV-5 (video inversion) $49.95. Adaptors for Deluxe III; Z/FV $49.95. Gated pulse $39.95. (New!) Sinewave unjammer switch! $19.95. Stops interference. (New!) Antenna blocking filter! $19.95, stops broadcasting. Sinewave IN-TV kits (I.F.), economy $39.95, DLX $49.95. 90%-assembled kits available,** add 30% to cost for assembly. **Apartment-sized satellite TVRO system $795.00,** up to 156 ch., **completely assembled, tested and guaranteed. 2 full years! Quantity discounts. Minimum order: $25.00. Free shipping! Payment: cashiers check, money order, Visa or MasterCard. L.S.R. ENGINEERING**, Dept. RE., Box 6075, Chicago IL 60680. Orders toll free: 1-(800) 432-1422. Information: 1-(312) 764-4330.

BEC Electronics

P.O. BOX 461244R
GARLAND, TX. 75046
(214) 487-9031

TERMS
- COD MINIMUM $20.00 + ADD $2.50 FOR COD'S
- UPS DELIVERY ADDRESS MUST ACCOMPANY ALL COD ORDERS
- $1.00 HANDLING ON ORDERS UNDER $10.00
- ADD 6% FOR SHIPPING
- TEXAS RESIDENTS ADD 5% STATE SALES TAX
- ALL FOREIGN ORDERS ADD 25% FOR SHIPPING (CANADA ADD 10%) NO FOREIGN COD'S
- CALL (214) 487-9031 TO PLACE CREDIT CARD OR COD ORDER

VISA MasterCard

OVER 45,000 SOLD SINCE 1977! SOUND EFFECTS KIT

This unit uses the TI 76477 IC and after the easy assembly is completed you will be able to reproduce almost any sound you want! Quality PC board and **all necessary components are provided. All** you need to add is a speaker. The circuitry of the kit provides you with a **Pulse Generator, MUX Oscillator & Comparator** to make more complex sounds & snap Programming examples provided to help you get used to using the unit.

18.50 ea.
2/34.50

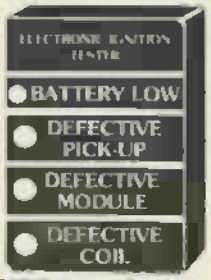

THE BEST DEAL!

This hand held Automotive Tester checks and tests the functions listed below easily and quickly. The original manufacturer sold over a million units in 1983 at 19.95 each. Instructions and charts are printed on the back of each unit. This tester will save hours of frustration and pay for itself the first time used! Units are all new, 100% guaranteed for 90 days from date of purchase.

TESTS: Battery Condition, Pick-up Coil, Ignition Module, and HV Coil

11.88 each ➡ **ORDER AS-25**

PAY 18.50 FOR BOTH!

Special SUPER MUSIC MAKER KIT 27.95

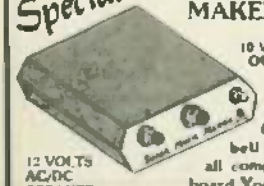

10 WATTS OUTPUT!

INCLUDES CASE & ROM CHIP ORDER KSM-03

12 VOLTS AC/DC
SPEAKER NOT INCLUDED

This popular kit is great for **car horns** or **doorbell applications. We** include all components and quality PC board. You'll love our easy to follow assembly instructions. The package price includes the kit, case w/front panel tune selection switches, and a preprogrammed 2708 memory chip (ROM) with 35 additional tunes, (60 total). **Additional ROM's are available for 9.95 to 14.95 ea.** (Listing sent with order). **Order Now! Offer expires March 30, 1984!** 12VAC transformer is available. **Order TN-20 2.50 ea.**

WINDSHIELD WIPER DELAY

Complete assembled PC card with IC, relay, and control with schematic. Complete with custom molded plastic case with bracket and hardware. **Special introductory price!** 3.95
Order: AS-01

LM1800 Audio IF & Separate 2W Audio output ICL-1800 .99
TDA1002 2W Audio output **Order: ICL-1002 1.25**
LM301 Linear 8 pin Op Amp **Order: ICL-01A .39**
CD 4433 Counter & 7 seg decoder/driver IC Hours **Order: ICL-4433 .69**

TELEPHONE RINGER SEMI KIT

Contains special ML8204 tone ringer IC and components to build a pleasant tone ringer for your phone. 5 pgs. of specs and circuits. **Order: KTR-01S 2.50**
PC Board for above **Order: PCB-01 2.00**

TRANSFORMER

24 VAC @ 2A
12 VAC @ 1A
6 VAC @ 2A
Completely Shielded
115 VAC Primary
7.50 ea 10/68.50
ORDER: TN-30

OUR PRODUCT CATALOG IS CRAMMED WITH NEAT GOODIES! SEND for it! (UNBANK FOR 1ST ORDER. FREE W/ORDER

www.americanradiohistory.com

HANDY

NEW!

The complete MICROCOMPUTER BREADBOARDING SOURCE at the lowest prices ANYWHERE!

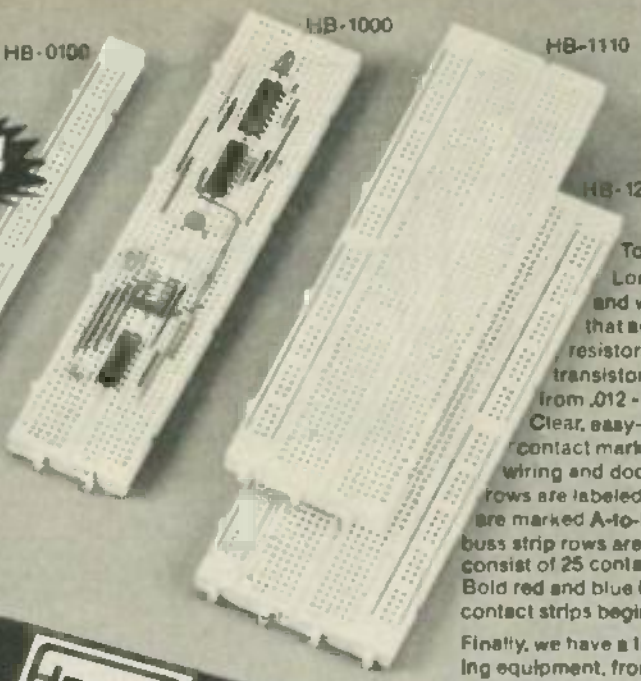

To all these add:
Long Life, low resistance and wide range contacts that accept combinations of resistors, capacitors, diodes, transistors, I.C.s, etc. with leads from .012 - .032" or 20 - 29 AWG. Clear, easy-to-read-and-identify contact markings simplify layout, wiring and documentation. Socket rows are labeled 1-to-64, and columns are marked A-to-E and F-to-J. Mating buss strip rows are labeled A-to-D and consist of 25 contacts each. Bold red and blue lines show where contact strips begin and end.

Finally, we have a full line of breadboarding equipment, from discrete sockets and buss strips to multi-board assemblies, available at comparable lower-than-low prices.

Just look at all these EXTRAS built into every HANDY test socket and buss strip...

- **Total contact labeling...** simplifies circuit design/layout
- **Self-adhesive backing...** for one-step simplified alignment and mounting
- **Full 9 14-Pin I.C. Capacity**
- **Expands both horizontally and vertically...** interlocks can't break or twist off
- **High temperature plastic housing...** to 80° C... no warping or melting ever!
- **Prices always up to 25% less than other leading brands**

Here's how to order...

HANDY Sockets and Buss Strips

Part Number	Socket Strips	Buss Strips	Ground Plate	Tie Points	14 pin IC's	Price
HB-0100	N/A	1	no	100	N/A	2.25
HB-1000	1	N/A	no	640	9	9.95
HB-1110	1	1	yes	740	9	11.95
HB-1210	1	2	yes	840	9	13.95

HANDY Breadboard Assemblies

Part Number	Socket Strips	Buss Strips	Binding Posts	Tie Points	14 pin IC's	Price
HB-2112	2	1	2	1380	18	24.95
HB-2312	2	3	3	1980	18	31.00
HB-3514	3	5	4	2420	27	47.95
HB-4714	4	7	4	3260	36	63.95

Mail Orders: Please add $3 (Canada & Int'l add $5) to cover cost of shipping/handling. **Charge Cards:** (Min. $15) Please include Acct. No., Exp. Date, Bank No. (M/C only) and your signature. **Checks:** Drawn in U.S. Dollars on U.S. banks only. **Connecticut Residents:** Add 7½% Sales Tax.

To order...call 1-800-34-HANDY
...charge with VISA or MasterCard.
All items off-the-shelf for immediate Shipment!

HANDY

a division of RSP Electronics Corp.

7 Business Park Drive • P.O. Box 699 • Branford, CT 06405
(203) 488-6603 • TWX: (910) 997-0684
Easy Link Mail Box: 62537580 • CompuServe: 71346, 1070
U.S. and Canadian Distributor inquiries welcomed

CIRCLE 43 ON FREE INFORMATION CARD

www.americanradiohistory.com

CIRCLE 34 ON FREE INFORMATION CARD

CB EQUIPMENT

PALOMAR Pride electronics—exclusive repair facility. Service—update—improvements on these and similar equipment. **PALOMAR-PRIDE REPAIR**, 1320-4 Grand, San Marcos, CA 92069 (619) 744-0720.

CB MODIFICATIONS

Increase channels, range, privacy! We specialize in frequency expanders, speech processors, FM converters, PLL & slider tricks, how-to books, plans, kits. Expert mail-in repairs & conversions. 16-page catalog $2.

CBC INTERNATIONAL, P.O. BOX 31500RE, PHOENIX, AZ 85046 (602) 996-8700

WANTED

INVENTIONS, ideas, new products wanted for presentation to industry and exhibition at national technology exposition. **Call 1-800-528-6050**, Arizona 1-800-352-0458, X831.

OLD tubes: 2A3, 10's, 45's, 50's, 80's, 81's, 211, 242, 845, VT-52, VT-62. **WESTERN ELECTRIC EQUIPMENTS** (818) 576-2642, David, POB 832, M-Park, CA 91754

SCANNERS

SCANNERS—discount prices Bearcat BC-100 $279.99; Bearcat 210XL $214.99; Bearcat 300 $335.99; Regency MX3000 $186.99; JIL SX100 $138.99; JIL SX200 $269.99; Bearcat 20/20 $275.99; Spectrum radar detector $214.99; plus $3.00 shipping. Free discount catalog. Lowest prices anywhere on scanners, radar detectors, marine radios, two-way accessories. **SCANNER WORLD**, 10-RE New Scotland, Albany, NY 12208 (518) 436-9606.

HOME ROBOTS

BUILD your own personal robot. World's largest supplier of kits, parts, publications. Catalog/photos $5.00 refundable. Design Handbook $10.00 ppd. **ROBOT SHOP**, Dept. 10, PO Box 582, El Toro, CA 92630.

APPLE SOFTWARE

ELECTRONICS made easy for Apple II users with Mentor, the proven theoretical circuit design package. Excellent learning aid too. $174.95, **KORSMEYER ELECTRONIC DESIGN, INC.**, 5701 Prescott, Lincoln, NE 68506, (402) 483-2238.

ELECTRONICS, PHYSICS, PSYCHIC PHENOMENA

PSYCHIC phenomena explained, learn to read minds, develop a photographic memory and more. No.1 $3.50. How U.F.O.s work. Produces spiraling lines of electricity, artifical gravity. No.2 $3.50. How to transmute the elements, the secrets been around since 1899. No.3 $4.00. Prophecies of Nostradamus over 80 prophecies, two showing the destruction of the M.X., explains biblical, mythological mysteries, best interpretations around. No.4 $10.00. Many electronics kits, modulated door lock, ruby crystal laser, electronic bug devices, just a few. Free catalog. No COD, or charge cards. Add $2.00 postage, handling. **MIKE REILLY**, 3520 SE 5th Ave., Cape Coral, FL 33904.

DATE SAFE TALISMAN TRADING & IND. INC.

5¼" diskette box holds 50 diskettes only $15.99 two $30.00, includes shipping. 6.5 sales tax California residents. Send money order **5601 SLAVSON AVENUE**, Suite 212, Culver City, CA 90230.

NEW ORLEANS AND WM. B. ALLEN

UP TO
25% OFF
ON
LARGEST FULL LINE INVENTORY OF
HAND HELD METERS
FOR EXAMPLE

FLUKE 73	$ 175
FLUKE 75	$ 88
FLUKE 77	$115
FLUKE 8020B	$170
FLUKE 8021B	$139
FLUKE 8022B	$126
FLUKE 8024B	$174
SOAR SX220	$ 22
SOAR ME540	$ 44

AS CLOSE AS YOUR TELEPHONE
CALL TOLL FREE FOR SAME DAY SHIPMENT ON
DISCOUNT PRICED TEST EQUIPMENT
18 LEADING MANUFACTURERS IN INSTRUMENTATION INCLUDING HUNTRON

UP TO
28.5% OFF
ON
HITACHI SCOPES
SAVE UP TO $480

V212	20MHz (SAVE $164)	$ 451
V222	20MHz (SAVE $191)	$ 524
V422	40MHz (SAVE $248)	$ 679
V650F	60MHz (SAVE $257)	$ 938
V209	20MHz (SAVE $250)	$ 692
V1050F	100MHz (SAVE $343)	$1252
V089	Vectorscope (SAVE $480)	$1204
V099	Waveform (SAVE $468)	$ 882

All Prices Include FREE $50 Probe

WM. B. ALLEN SUPPLY CO.
ALLEN SQUARE
300 BLOCK NORTH RAMPART, NEW ORLEANS, LA 70112

CALL TOLL FREE
800 535-9593
LOUISIANA 800 462-9520

CIRCLE 56 ON FREE INFORMATION CARD

www.americanradiohistory.com

WE HAVE QUALITY PARTS, DISCOUNT PRICES AND *FAST* SHIPPING!

TRANSFORMERS

120 volt primaries

5.6 VOLTS @ 750 MA	$2.00
6 VOLTS @ 100 MA	$1.25
12 VCT @ 200 MA	$2.00
16 V. @ 800 MA	$3.50
16 VOLTS @ 1 AMP	$4.50
24 VOLTS @ 250 MA	$2.50
24 VCT @ 1 AMP	$4.50
42 VCT @ 1.2 AMP	$4.50

WALL TRANSFORMER

ALL ARE 115 VAC PLUG IN

4 VDC @ 70 MA	$2.00
6 VDC @ 100 MA	$2.50
9 VDC @ 500 MA	$5.00
15 VAC @ 300 MA	$3.00
16.8 VAC @ 10 VA	$3.50
17 VAC @ 800 MA	$4.00

SPRING LEVER TERMINALS

TWO COLOR CODED TERMINALS ON A STURDY 2 3/4" × 3 3/4" BAKELITE PLATE

GREAT FOR SPEAKER ENCLOSURES OR POWER SUPPLIES

$1.00 EACH 10 FOR $9.00

RS-232 EXTENTION

9 LINE CONNECTED. LINES 1 THROUGH 8 & 20. DB25 MALE TO FEMALE. 10 FEET SHIELDED.

$11.00 EACH

MULTI-SWITCHES

3 STATION NON-INTERLOCKING

3 - 2PDT SWITCHES, EACH OPERATES INDEPENDENTLY

1¾" BETWEEN MOUNTING CENTERS

$1.75 EACH

5 STATION INTERLOCKING

MADE BY ALPS

3 - 2PDT AND 2 - 6PDT

SWITCHES ON FULLY INTERLOCKING ASSEMBLY

3¼" BETWEEN MOUNTING CENTERS

$2.50 EACH

5 STATION NON-INTERLOCKING

SAME AS ABOVE, EXCEPT EACH SWITCH OPERATES INDEPENDENTLY

$2.50 EACH

2 CHANNEL LIGHT ORGAN

EASILY HOOKS INTO STEREO SPEAKERS AND ALLOWS 110 VAC LIGHTS TO DANCE WITH MUSIC. TWO SEPARATE 110 VAC OUTPUTS FOR HIGH AND LOW FREQUENCY AUDIO SIGNALS. USE TWO ORGANS FOR STEREO

$6.50 PER UNIT

COLOR LIGHT STRING AVAILABLE $1.75 EA

MIKE CONNECTOR

5 CONDUCTOR IN-LINE PLUG AND CHASSIS MOUNT JACK. TWIST LOCK STYLE. SAME AS SWITCHCRAFT 12CL5M

$2.00 PER SET

METER

0 - 15 V.D.C.

THIS 2 3/4" SQUARE METER MEASURES 0-15 VDC

$4.50 EACH

SUB-MINIATURE D TYPE CONNECTOR

SOLDER TYPE SUB MINIATURE CONNECTORS USED FOR COMPUTER HOOK UPS

DB-15 PLUG	$2.75
DB-15 SOCKET	$4.00
DB-15 HOOD	$1.50
DB-25 PLUG	$2.75
DB-25 SOCKET	$3.50
DB-25 HOOD	$1.25

"PARALLEL" PRINTER CONNECTOR

SOLDER STYLE 36 PIN MALE USED ON "PARALLEL" DATA CABLES

$5.50 EACH

I.D.C. MALE

WILL PRESS FIT ON STANDARD RIBBON CABLE.

$5.00 EACH

7 CONDUCTOR RIBBON CABLE

SPECTRA STRIP RED MARKER STRIP. 28 GA STRANDED WIRE

$5.00 PER ROLL (100 FT.)

COMMUNICATION MICROPHONE

NEW C.B. STYLE MIKE WITH PUSH S.P.D.T. SWITCH

$5.00 EACH

PUSHBUTTON POWER SWITCH

DOUBLE POLE POWER SWITCH PUSH ON PUSH OFF

$1.00 EACH

NEON W/ RESISTOR

DIRECT OPERATION FROM 120 VOLT

7 for $1.00

120V INDICATOR

NEON INDICATOR RATED 120 V 1/3 W. MOUNTS IN 5/16" HOLE. RED LENS

75¢ EACH

10 FOR $7.00

100 FOR $66.00

8 TRACK RECORD/PLAY TAPE DECK

MORSE MODEL 94 A

8 TRACK RECORD WITH AUTO STOP. NOT FULLY FUNCTIONAL. REMOVED FROM ASSEMBLY LINE FOR MINOR PROBLEMS. IDEAL FOR PARTS. EACH UNIT CONTAINS SWITCHES, LIGHTS, TAPE MOTOR, BELT, WHEELS, PULLEYS, PRE AMPS, TAPE HEADS, ETC.

"SPECIAL PRICE" $4.00 EACH

10 for $35.00

2K 10 TURN

MULTI TURN POT

SPECTROL #MOD 534-7161

$5.00 EACH

EDGE CONNECTORS

ALL ARE .156" SPACING

10 PIN EDGE CONNECTOR

1RW #50-10A20 $2.00 EACH

18/36 GOLD

SOLDER EYELET $2.00 EACH

22/44 TIN

P.C. STYLE. NO MOUNTING EARS

$1.50 EACH 10 FOR $14.00

22/44 GOLD

P.C. STYLE $2.00 EACH 10 FOR $18.00

28/56 GOLD

28/56 GOLD PLATED CONTACTS. .156 CONTACT SPACING.

$2.50 EACH 10 FOR $22.00

SWITCHES

MINI-PUSH BUTTON

S.P.S.T. MOMENTARY NORMALLY OPEN

¼" BUSHING

35¢ EACH

10 FOR $3.25

100 FOR $30.00

SPECIFY COLOR

RED BLACK WHITE

GREEN YELLOW

SOLID STATE BUZZER

STAR #SMB 06

6 VDC

TTL COMPATIBLE

$1.00 EACH

10 FOR $9.00

SOLID STATE RELAY

HEINEMANN ELECTRIC #HE 5A 240—5 AMP CONTROL 3.3ZVDC LOAD 240VAC 5 AMPS SIZE 2" × 1" × ¾" HIGH

$5.00 10 FOR $45.00

NEW LARGER! 48 PAGE CATALOG

FREE! FREE! FREE! SEND FOR NEW LARGER! 48 PAGE CATALOG FREE! FREE! FREE!

LINE CORDS

TWO WIRE

6 18ga TWO WIRE

3 FOR $1.00

THREE WIRE

18 INCH 18ga THREE WIRE

2 for $1.00

6 FOOT 18ga THREE WIRE

$2.00 EACH

SOLDERING IRON STAND

SPRING STEEL IRON HOLDER ON WEIGHTED BASE

$3.00 EACH

TRANSISTORS

2N706	8 for $1.00
2N2222A	4 for $1.00
PN2222	8 for $1.00
2N2904	4 for $1.00
2N2905	4 for $1.00
2N2907	4 for $1.00

KEY ASSEMBLY

5 KEY

$1.00 EACH

CONTAINS 5 SINGLE-POLE NORMALLY OPEN SWITCHES. MEASURES 3 3/4" LONG

6 KEY

$1.25 EACH

CONTAINS 6 SINGLE-POLE NORMALLY OPEN SWITCHES. MEASURES 4 1/4" LONG

BATTERY OPERATED SMOKE DETECTOR

BRK MODEL #-7 79R UL APPROVED

9 VOLT BATTERY OPERATION FOR CEILING OR WALL MOUNT

$8.00 EACH 2 FOR $15.00

POWER SUPPLY W/ PRE-AMP

THIS SUPPLY WAS USED TO POWER AN 8 TRACK/CASSETTE UNIT. IT WILL SUPPLY APPROX 18 VDC AND INCLUDES A SMALL PRE-AMP TO BOOST SIGNAL LEVEL. RCA PLUGS FOR LINE IN/OUT

$4.50 EACH

ROTARY SWITCH

1 POLE 6 POSITION

1¼" DIA x 1½" HIGH

75¢ EACH 10 for $6.00

RELAYS

MINIATURE 6 VDC RELAY

SUPER SMALL SPDT RELAY. GOLD COBALT CONTACTS.

RATED 1 AMP AT 30 VDC. HIGHLY SENSITIVE. TTL DIRECT DRIVE POSSIBLE. OPERATES FROM 4.5 TO 6 V. COIL RES 220 OHM

1 3/16" × 13/32" × 7/16"

AROMAT # RSD-6V

$1.50 EACH 10 FOR $13.50

13 VDC RELAY

CONTACT S.P.N.C. 10 AMP @ 120 VAC. ENERGIZE COIL TO OPEN CONTACT. COIL 13 VDC 650 OHMS

SPECIAL PRICE $1.00 EACH

4 PDT RELAY

- 14 pin style
- 3 amp contacts
- 24 volt d.c. or 120 volt a.c. coil
- Used but fully tested

$1.75 EACH

specify coil voltage

LARGE QUANTITIES AVAILABLE

SOCKETS FOR RELAY 14P 49¢

COMPUTER GRADE CAPACITORS

2,000 mfd. 200 VDC 1 3/4" DIA - 5" HIGH	$2.00
3,500 mfd. 40 VDC 1 3/8" DIA - 3 3/4" HIGH	$1.00
6,400 mfd. 60 VDC 1 3/8" DIA - 4 1/4" HIGH	$2.50
22,000 mfd. 40 VDC 2" DIA - 6" HIGH	$3.00
31,000 mfd. 15 VDC 1 3/4" DIA - 4" HIGH	$2.50
72,000 mfd. 15 VDC 2" DIA - 4 3/8" HIGH	$3.50
185,000 mfd. 6 VDC 2 1/2" DIA - 4 1/2" HIGH	$1.50

CLAMPS TO FIT CAPACITORS 50¢ ea.

SLIDE POTS

100K linear tape

2" LONG

1 5/8" TRAVEL 75¢ EACH

500K linear taper

2 7/8" LONG

1 3/4" TRAVEL 75¢ EACH

DUAL 100K audio taper

3 1/2" LONG

2 1/2" TRAVEL $1.50 EACH

CRYSTALS

CASE STYLE HC33/U

2 MHZ	COLORBURST 3579.545 KC
$3.50 EACH	$1.00 EACH

METAL OXIDE VARISTOR

G.E. #V822A12

50 VOLTS NOMINAL D.C. VOLTAGE. 5/8" DIAMETER

2 FOR $1.00

MINIATURE TOGGLE SWITCHES

ALL ARE RATED 5 AMPS @ 125 VAC

S.P.D.T. (on-on) P.C. STYLE NON-THREADED BUSHING 75¢ EACH 10 FOR $7.00

S.P.D.T. (on-on) SOLDER LUG TERMINALS $1.00 EACH 10 FOR $9.00 100 FOR $80.00

S.P.D.T. (on-off-on) SOLDER LUG TERMINALS $1.00 EACH 10 FOR $9.00 100 FOR $80.00

S.P.D.T. (on-off-on) NON-THREADED BUSHING P.C. STYLE 75¢ EACH 10 FOR $7.00

S.P.D.T. (on-on) P.C. LUGS THREADED BUSHING $1.00 EACH 10 FOR $9.00 100 FOR $80.00

D.P.D.T. (on-on) SOLDER LUG TERMINALS $2.00 EACH 10 FOR $18.00 100 FOR $160.00

L.E.D.'S

STANDARD JUMBO DIFFUSED

RED 10 FOR $1.50

GREEN 10 FOR $2.00

YELLOW 10 FOR $2.00

FLASHER LED

5 VOLT OPERATION

RED JUMBO SIZE

$1.00 EACH

BI POLAR LED

2 FOR $1.70

SUB MINI LED

.070" - .090"

RED 10 FOR $1.00

200 FOR $18.00

GREEN 10 FOR $1.50

LED HOLDERS

TWO PIECE HOLDER FOR JUMBO LED

10 FOR 65¢ 200 FOR $10.00

CLEAR CLIPLITE HOLDER

MAKE LED A FANCY INDICATOR LIGHT

4 FOR $1.00

PHOTO-FLASH CAPACITORS

170 MFD 330 VOLT

1 1/8" × 7/8"

2 FOR $1.00 10 FOR $7.00

750 MFD 330 VOLT

2" HIGH × 1 1/4" DIA

$1.25 EACH 10 FOR $11.00

TOLL FREE ORDERS ONLY

1-800-826-5432

(ORDER ONLY)

IN CALIFORNIA 1-800-258-6666

ALASKA, HAWAII OR INFORMATION (213) 380-8000

ALL ELECTRONICS CORP.

ALL ELECTRONICS CORP.

905 S. Vermont Ave. P.O. BOX 20406 Los Angeles, Calif. 90006

QUANTITIES LIMITED

MINIMUM ORDER $10.00

USA $2.50 SHIPPING

FOREIGN ORDERS INCLUDE SUFFICIENT SHIPPING

CALIF. RES. ADD 6 1/2%

NO C.O.D.'S

CIRCLE 12 ON FREE INFORMATION CARD

www.americanradiohistory.com

MICROPROCESSOR COMPONENTS

7400

74LS

74S/PROMS

CMOS

LINEAR

MICROPROCESSOR CHIPS

Z80, Z80A, Z80B, Z8000 SERIES

6500/6800/6900 SERIES

8080 SERIES

DISK CONTROLLERS

SPECIAL FUNCTION

STATIC RAMS

PROMS / EPROMS

DATA ACQUISITION

LOW PROFILE (TIN) SOCKETS

SOLDERTAIL STANDARD (TIN)

SOLDERTAIL (GOLD) STANDARD

WIRE WRAP SOCKETS (GOLD) LEVEL #3

$10.00 Minimum Order — U.S. Funds Only
California Residents Add 6½% Sales Tax
Shipping — Add 5% Plus $1.50 Insurance
Send S.A.S.E. for Monthly Sales Flyer!

Spec Sheets — 30¢ each
Send $1.00 Postage for your FREE 1984 JAMECO CATALOG
Prices Subject to Change

MasterCard

Jameco ELECTRONICS

VISA

1355 SHOREWAY ROAD, BELMONT, CA 94002
11/84 PHONE ORDERS WELCOME — (415) 592-8097 Telex: 176043

Digitalker™

DT1050 — Applications: Teaching aids, appliances, clocks, automotive, telecommunications, language translations, etc.

The DT1050 is a standard DIGITALKER kit consisting of 137 separate and useful words, 7 tones, and 5 different silence durations. The words and tones have been stored digitally in memory, making it possible to output single words or words concatenated into phrases or even sentences. The "voice" output of the DT1050 is a highly intelligible male voice. Female and children's voices can be synthesized. The vocabulary is chosen so that it is applicable to many products and markets.

The DT1050 consists of a Speech Processor Chip, MM54104 (40 pin) and two (2) Speech ROMs MM52164SSN1 and MM52164SN2 (24 pin) along with a master word list and a recommended schematic diagram on the application sheet.

DT1050 Digitalker® ..... $34.95 ea.
MM54104 Processor Chip ..... $14.95 ea.

DT1057 - Expands the DT1050 vocabulary from 137 to over 250 words. Includes 2 ROMs and specs.
Part No. DT1057 ..... $24.95 ea.

INTERSIL

30009 1983 INTERSIL Data Book $9.95

74HC High Speed CMOS

74C - CMOS

LINEAR

30003 1982 Nat. Linear Data Book $11.95

CIRCLE 41 ON FREE INFORMATION CARD

www.americanradiohistory.com

Commodore

RS232 ADAPTER FOR VIC-20 AND COMMODORE 64

The JE232CM allows connection of standard serial RS232 printers, modems, etc. to your VIC-20 and C-64. A 4-pole switch allows the inversion of the 4 control lines. Complete installation and operation instructions included.

• Plugs into User Port • Provides Standard RS232 signal levels • Uses 5 signals (Transmit, Receive, Clear to Send, Request to Send, Data Terminal Ready, Data Set Ready).

JE232CM $39.95

VOICE SYNTHESIZER FOR APPLE AND COMMODORE

JE520CM

• Over 250 word vocabulary - allophone allows the formation of many thousands more • Built-in amplifier, speaker, volume control, and audio jack • Recreates a clear, natural daily voice • Plug-in user ready with documentation and sample software • Case size: 7¼"L x 3¼"W x 1-3/8"H

APPLICATIONS: • Security Warning • Telecommunications • Teaching • Handicap Aid • Instrumentation • Games

The JE520 VOICE SYNTHESIZER will plug right into your computer and allow you to enhance almost any application. Utilizing National Semiconductor's DIGITALKER™ Speech Processor IC (with four custom memory chips), the JE520 compresses natural speech into digital memory, including the original inflections and emphases. The result is an extremely clear, natural vocalization.

Part No.	Description	Price
JE520CM	For Commodore 64 & VIC-20	$114.95
JE520AP	For Apple II, II+, and IIe	$149.95

JE664 EPROM PROGRAMMER

8K to 64K EPROM$ — 24 & 28 Pin Packages

Completely Self-Contained — Requires No Additional System for Operation

• Programs and validates EPROMs • Checks for properly erased EPROMs • Emulates PROMs or EPROMs • RS232C Computer interface for editing and program loading • Loads data into RAM by keyboard • Changes data in RAM by keyboard • Loads RAM from an EPROM • Compares EPROMs for content differences • Copies EPROMs • Power input: 115VAC, 60Hz, less than 10W power consumption • Enclosure: Color-coordinated, light tan panels with anodized gold accents in matte finish • Size: 13¾"L x 8¾"D x 3¾"H • Weight: 6½ lbs.

The JE664 EPROM Programmer simplifies and expedites every EPROM task at a fraction of the cost of other systems. Just connect the JE664 between the 8 to 64K RAM of your computer and the EPROM you wish to program or duplicate. Then, using the keyboard and display of your computer, you can easily and quickly program, duplicate, verify, and compare EPROMs. The JE664's ability to be controlled by your computer frees the user's full capabilities for other tasks. Or, if you prefer, the JE664 can be programmed quickly and easily without a computer. Simply select the desired EPROM type and address range, and the JE664 will automatically program the EPROM. The JE664 checks DATA and ADDRESS of each EPROM it programs. A "DISPLAY EPROM DATA" button displays the DATA stored from RAM sent to EPROM and is displayed in both hexadecimal and binary code. The front panel features 4 convenient operating modes. The JE664 Programmer includes our JE664 Jumper Module for added flexibility.

JE664-A EPROM Programmer $995.00

Assembled & Tested (Includes JE664A Manual)

JE664-RS232C INTERFACE OPTION — The RS232C Interface Option expands computer access to the JE664's RAM. This allows the computer to manipulate, store and operate EPROM data in and from the JE664 as external program storage is supplied in HEXADEC for CP/M computers. Documentation is provided to assist the software in other computers with an RS232 port. 1200 Baud, 8-bit word, odd parity and 2 stop bits.

FOR A LIMITED TIME A SAMPLE OF SOFTWARE WRITTEN IN BASIC FOR THE TRS-80® MODEL I, LEVEL II COMPUTER WILL ALSO BE PROVIDED

JE664-ARS EPROM Prog. w/RS232 Option $1195.00

Assembled & Tested (Includes JE664A Manual)

EPROM JUMPER MODULES — The JE664's JUMPER MODULE (Patent Pending) makes it a plug-in module that you use the JE664 to the proper programming pulses to the EPROM and configures the EPROM socket connections for that selected EPROM.

Jumper No.	Notes	Factory Setting	Typical Applications
J1		J1B	2708, 2716, 2732, 2764, 27128, 27256, 27512, 2564, 68764, 68766
J2		J2A	2716, 2732, 2764, 27128, 27256, 27512, 2564, 68764, 68766
J3		J3A	2732, 2764, 27128, 27256, 27512, 2564, 68764, 68766
J4		J4A	2764, 27128, 27256, 27512, 2564, 68764, 68766
J5		J5A	27128, 27256, 27512, 2564, 68764, 68766
J6		J6A	27256, 27512, 2564, 68764, 68766
J7		J7A	27512, 2564, 68764, 68766
J8		J8A	2564, 68764, 68766
J9		J9A	68764, 68766
J10		J10A	68766

ProModem 1200

Intelligent 300/1200 Baud Telephone Modem with Real Time Clock/Calendar

The ProModem™ is a Bell 212A (300/1200 baud) intelligent stand-alone modem • Full featured expandable modem • Standard features include Auto Answer and Auto Dial, Help Commands, Programmable Intelligent Dialing, Touch Tone™ and Pulse Dialing & More • Hayes command set compatible plus an additional extended command set • Shown w/alphanumeric display option.

PM1200. . . . . $374.95

KEYBOARDS

13¾"L x 4¾"W x 1¾"H

Mitsumi 54-Key Unencoded All-Purpose Keyboard

• SPST keyswitches • 20 pin ribbon cable connection • Low profile keys • Features cursor controls, control, caps (lock), function, enter and shift keys • Color (keycaps): grey • Wt. 1 lb. • Pinout included

KB54. . . . . $14.95

New!

19-9/16"L x 6¾"W x 1¾"H

76-Key Serial ASCII Keyboard

• Simple serial interface • SPST mechanical switching • Operates in upper and lower case • Five user function keys: F1-F5 • Six finger edge card connection • Color (keys): tan • Weight: 2 lbs. • Data incl.

KB76. . . . . $29.95

Nationally Known Manufacturer!

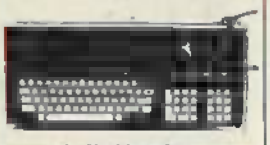

21¾"L x 9.8" W x 3¾"H

106-Key Serial ASCII Keyboard

• 8-bit serial ASCII (12-bit data structure — requires 3 instruction bits and 1 sync bit) • The terminals were designed to be daisy chained around a central host computer and used as individual work stations • Hall effect switching • Numeric and cursor keypad • 16 user definable keys • 80" interface cable with 9-pin sub-miniature connector • 7 LED function displays • Security lock • N-key rollover • Automatic key repeat function • Color (case): white with black panel — (key caps): grey and blue Weight: 8½ lbs. • Data included

KB139. . . . . $48.95

New!

14¾"L x 5¾"W x 1¾"H

68-Key Keyboard with Numeric Keypad for Apple II and II+

• Plugs directly into Apple II or II+ motherboard with 16-pin ribbon cable connect • 26 spec. func. • Color (keys): white/grey • Wt. 2 lbs. • Enclosures available

KB-A68. . . . . $79.95

POWER SUPPLIES

TRANSACTION TECHNOLOGY, INC. 5VDC @ 1 AMP Regulated Power Supply

• Output +5VDC @ 1.0 amp (also +30VDC regulated) • Input: 115VAC, 60 Hz • Two-tone (black/beige) self-enclosed case • 6 foot, 3-conductor black power cord • Size: 6¼"L x 7"W x 2¼"H • Weight: 3 lbs.

PS51194. . . . . $14.95

Power/Mate Corp. REGULATED POWER SUPPLY

• Input: 105-125/210-250 VAC at 47-63 Hz • Line regulation: ±0.05% • Three mounting surfaces • Overvoltage protection • UL recognized • CSA certified

Part No.	Output	Size	Weight	Price
EMA5/6B	5V@3A/6V@2.5A	4¾"L x 4"W x 2¼"H	2 lbs.	$29.95
EMA5/6C	5V@4A/6V@5A	5¾"L x 4¾"W x 2¼"H	4 lbs.	$39.95

POWER SUPPLY +5VDC @ 7.5 AMP, 12VDC @ 1.5 AMP SWITCHING

• Input: 115VAC, 50-60Hz @ 3 amp/220VAC, 2Ø0 @ 1.4 amp • Two 10W Molex supply select switches (115/220VAC) • Output: 5VDC @ 7.5 amps, 12VDC @ 1.5 amps • 6 foot black power cord • Size: 11¾"L x 13¾"W x 3¾"H • Weight: 6 lbs.

PS94VOS. $34.95

KEPCO/TDK 4-OUTPUT SWITCHING POWER SUPPLY

• Ideal for disk drive needs of CRT terminals, microcomputers and video games • Input: 115/230VAC, 50/60Hz • Output: +5V @ 5 Amp, +12V @ 1.8 Amp, +12V @ 2 Amp, -12V @ 0.5 Amp • UL recognized • CSA certified • Size: 7¾"L x 6-3/16"W x 1¾"H • Weight: 2 lbs.

MRM 174KF. $59.95

New!

POWER PAC INC. REGULATED POWER SUPPLY

• Perfect for computer systems • Output: +5VDC @ 11 Amps, -5VDC @ 1 Amp, +12VDC @ 2 Amps, -12VDC @ 0.5 Amp and +24VDC @ 3 Amps • Over-voltage protection • Size: 12¾"L x 4¾"W x 4½"H • Weight: 17 lbs. • Spec incl.

PS2922. . . . . $69.95

4-CHANNEL SWITCHING POWER SUPPLY

• Microprocessor controlled, terminal, medical equipment and process control applications • Input: 90-130VAC, 47-440Hz • Output: +5VDC @ 5A, -5VDC @ 1A, +12VDC @ 1A, -12VDC @ 1A • Line regulations: ±0.2% • Ripple: 30mV p-p • Load regulation: ±1% • Overcurrent protection • Aux 5V main output • 10Hz • Size: 4¾"L x 1½"W x 4-15/16"H • Weight: 1½ lbs.

FCS-604A. . . . . $69.95 each

Switching Power Supply for APPLE II, II+ & IIe™

• Can drive four floppy disk drives and up to eight expansion cards • Short circuit and overload protection • Fits inside Apple computer • Fully regulated +5V @ 5A, +12V @ 1.5A, -5V @ .5A, -12V @ .5A • Direct plug-in power cord included • Size: 9¾"L x 3½"W x 2¾"H • Weight: 2 lbs.

KHP4007. . . . . $59.95

$10.00 Minimum Order — U.S. Funds Only
California Residents Add 6½% Sales Tax
Shipping — Add 5% plus $1.50 Insurance
Send S.A.S.E. for Monthly Sales Flyer!

Spec Sheets — 30¢ each
Send $1.00 Postage for your *FREE 1984 JAMECO CATALOG*
Prices Subject to Change

MasterCard

Jameco ELECTRONICS

VISA

1355 SHOREWAY ROAD, BELMONT, CA 94002
11/84 *PHONE ORDERS WELCOME — (415) 592-8097 Telex: 176043*

Fiberoptics

NEW! The EDU-LINK Learning Kit

The EDU-LINK fiber optic system is a low-cost, TTL compatible data transmission system designed specifically as an educational tool for students and engineers working in many different industries. Includes: transmitter PCB, a receiver PCB, one meter of plastic optic fiber, and all the necessary electrical hardware • Complete step-by-step instructions, theory of operation, and tutorial information are included.

ELK-1. . . . . *ONLY* $19.95

APPLE ACCESSORIES

5¼" APPLE™ Direct Plug-In Compatible Disk Drive and Controller Card

The ADD-514 Disk Drive uses Shugart SA390 mechanics 143K formatted storage • 35 tracks • Compatible with Apple Controller & ACC-1 Controller • The drive comes complete with connector and cable — just plug into your disk controller card • Size: 6"L x 3½"W x 8-9/16"D • Weight: 4½ lbs.

ADD-514 (Disk Drive). $179.95
ACC-1 (Controller Card). . . . . $ 49.95

Also Available...
JE864 (80 Col. + 64K RAM for IIe). . . . . $ 99.95
JE614 (Numeric/Aux. Keypad for IIe). . . . . $ 59.95
F051APC (Apple Compat. ½-Ht. Drive). . . . $189.95

DATASHIELD® Surge Protector

• Eliminates voltage spikes and EMI-RFI noise before it can damage your equipment or cause data loss • 6 month warranty • Power dissipation (100 microseconds) 1,000,000 watts • 6 sockets • 6 foot power cord • Normal line voltage indicator light • Brown out/black out reset switch • Weight: 2 lbs.

Model 100. . . . . $69.95

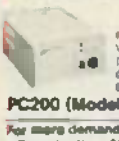

DATASHIELD® Back-Up Power Source

Provides up to 30 minutes of continuous 120 VAC 60Hz power to your computer system (load dependent) when you have a black out or voltage sag • Output rating: 200 watts • Six outlets surge protected • Weight: 24 lbs.

PC200 (Model 200). $299.95

For more demanding systems (e.g. with hard disks)
• Output rating: 300 watts

XT300. . . . . $399.95

IBM MEMORY EXPANSION KIT COMPAQ COMPATIBILITY

SAVE HUNDREDS OF $$$ BY UPGRADING MEMORY BOARDS YOURSELF!

Most of the popular memory boards allow you to add an additional 64K, 128K, 192K, or 256K. The IBM64K RAM with populate these boards in one byte increments. The kit is simple to install — just insert the nine 64K RAM chips in the provided sockets and set the two groups of switches. Directions are included.

IBM64K (Nine 200ns 64K RAMs). . . . $43.95

TRS-80 MEMORY EXPANSION KIT

TRS-80 to 16K, 32K, or 48K

**Model I —	From 4K to 16K Requires [1] One Kit
Model III —	From 4K to 48K Requires [3] Three Kits
Color —	From 4K to 16K Requires [1] One Kit

**Model I equipped with Expansion Board can be easily upgraded to 48K by changing the 16K RAM chips to 64K RAM chips. Directions are included.

TRS-16KJ *200ns for Color & Model III $8.95
TRS-16K6 *250ns for Model I $6.95

TRS-80 Color 32K or 64K Conversion Kit

Easy to install kits comes complete with 8 pcs. 4164-2 (200ns) 64K dynamic RAMs and conversion documentation. Converts TRS-80 color computers with D, E, ET, F and NC circuit boards to 32K. Also converts TRS-80 color computer II to 64K. Flex DOS or OS-9 required to utilize full 64K RAM on all computers.

TRS-64K2. . . . . $38.95

UV-EPROM Eraser

Erases 2708, 2716, 2732, 2764, 2K×8, 2532, 8864. Erases up to 8 chips within 1+ minutes (1 chip in 37 minutes). Maintains constant brightness distance of one inch. Special conductive foam floor eliminates static build-up. Built-in safety lock to prevent UV exposure. Compact — only 9.06" x 5.75" x 2.69". Complete with holding tray for 7 chips.

DE-4 UV-EPROM Eraser . . . $79.95
UVS-11EL Replacement Bulb . . $16.95

CIRCLE 41 ON FREE INFORMATION CARD

www.americanradiohistory.com

PARTIAL LISTING ONLY- PLEASE CALL OR WRITE FOR FREE CATALOG.

STATIC RAMS

2112	256x4	(450ns)	2.99
2114	1024x4	(450ns)	8/9.95
2114-25	1024x4	(250ns)	8/10.95
2114L-4	1024x4	(450ns)(LP)	8/12.95
2114L-3	1024x4	(300ns)(LP)	8/13.45
2114L-2	1024x4	(200ns)(LP)	8/13.95
TMM2018-200	2048x8	(200ns)	4.15
TMM2018-150	2048x8	(150ns)	4.95
TMM2016-100	2048x8	(100ns)	6.15
HM6116-4	2048x8	(200ns)(cmos)	4.75
HM6116-3	2048x8	(150ns)(cmos)	4.95
HM6116LP-4	2048x8	(200ns)(cmos)(LP)	5.95
HM6116LP-3	2048x8	(150ns)(cmos)(LP)	6.95
HM6264P-15	8192x8	(150ns)(cmos)(LP)	39.95

LP = Low Power

DYNAMIC RAMS

4116-250	16384x1	(250ns)	8/7.95
4116-200	16384x1	(200ns)	8/12.95
4116-150	16384x1	(150ns)	8/14.55
4164-200	65536x1	(200ns)(5v)	9/44.95
4164-150	65536x1	(150ns)(5v)	9/49.00
TMS4164	65536x1	(150ns)(5v)	8.95

5v = Single 5 Volt Supply

EPROMS

2708	1024x8	(450ns)	3.95
2716	2048x8	(450ns)(5v)	3.95
2716-1	2048x8	(350ns)(5v)	5.95
TMS2532	4096x8	(450ns)(5v)	5.95
2732	4096x8	(450ns)(5v)	4.95
2732-250	4096x8	(250ns)(5v)	8.95
2732-200	4096x8	(200ns)(5v)	11.95
2732A	4096x8	(250ns)(5v)(21vPGM)	9.95
2732A-2	4096x8	(200ns)(5v)(21vPGM)	13.95
2764	8192x8	(450ns)(5v)	6.95
2764-250	8192x8	(250ns)(5v)	7.95
2764-200	8192x8	(200ns)(5v)	18.95
27128-30	16384x8	(300ns)(5v)	22.95

5v = Single 5 Volt Supply
21vPGM = Program at 21 Volts

SPECTRONICS CORPORATION EPROM ERASERS

	Timer	Chip Capacity	Intensity (uW/Cm²)	
PE-14		9	8,000	83.00
PE-14T	X	9	8,000	119.00
PE-24T	X	9	9,600	175.00

8000

8035	5.95
8039	5.95
8080	3.95
8085	4.95
8085A-2	11.95
8087	175.00
8088	29.95
8155	6.95
8155-2	7.95
8156	6.95
8748	24.95
8755	24.95

8200

8203	39.95
8205	3.50
8212	1.80
8216	1.75
8228	3.49
8237-5	21.95
8243	4.45
8250	10.95
8251	4.49
8253	5.95
8253-5	7.95
8255	4.49
8255-5	5.25
8259	6.90
8259-5	7.50
8272	39.95
8275	29.95
8279	8.95
8282	8.50
8284	5.50
8286	6.50
8288	25.00

Z80

2.5 Mhz

Z80-CPU	3.95
Z80-CTC	3.95
Z80-PIO	3.95
Z80-SIO/0	11.95

4.0 Mhz

Z80A-CPU	4.49
Z80A-CTC	4.95
Z80A-DART	9.95
Z80A-PIO	4.49
Z80A-SIO/0	12.95

6.0 Mhz

Z80B-CPU	9.95

6500

6502	4.95
6520	4.35
6522	6.95
6532	9.95
6551	11.85
6502A	5.95
6522A	9.95
6551A	11.95

6800

68000	49.95
6800	2.95
6802	7.95
6809E	14.95
6809	11.95
6821	2.95
6845	14.95
6850	3.25
6883	22.95

DISK CONTR

1771	16.95
1791	24.95
1793	26.95
UPD765	39.95

INTERFACE

8T26	1.59
8T28	1.98
DM8131	2.95
DP8304	2.95

CLOCK CHIPS

MM5314	4.95
MM5369	3.95
MM58167	12.95
MSM5832	3.95

DATA ACQ

ADC0804	3.49
ADC0809	4.49
ADC0817	9.95
DAC0808	2.95
MC1408L8	2.95

SOUND CHIPS

76477	3.95
76488	6.95
AY3-8910	12.95
SSI263	19.95

74LS00

74LS00	.24	74LS157	.65
74LS01	.25	74LS158	.59
74LS02	.25	74LS160	.69
74LS03	.25	74LS161	.65
74LS04	.24	74LS163	.65
74LS05	.25	74LS164	.89
74LS08	.28	74LS165	.95
74LS09	.29	74LS166	1.95
74LS10	.25	74LS169	1.75
74LS11	.35	74LS173	.88
74LS12	.35	74LS174	.88
74LS13	.45	74LS191	.89
74LS14	.89	74LS192	.79
74LS20	.25	74LS193	.79
74LS21	.29	74LS194	.69
74LS26	.29	74LS195	.89
74LS27	.29	74LS197	.79
74LS32	.29	74LS221	.89
74LS33	.55	74LS240	.95
74LS37	.35	74LS241	.99
74LS38	.38	74LS242	.99
74LS40	.25	74LS243	.99
74LS42	.49	74LS244	1.29
74LS47	.75	74LS245	1.49
74LS51	.28	74LS251	.59
74LS73	.39	74LS253	.59
74LS74	.36	74LS257	.59
74LS75	.39	74LS258	.59
74LS76	.39	74LS259	2.75
74LS85	.89	74LS260	.59
74LS86	.39	74LS266	.55
74LS90	.55	74LS279	.49
74LS92	.55	74LS280	1.49
74LS93	.65	74LS283	.69
74LS107	.39	74LS290	.89
74LS109	.39	74LS293	.89
74LS112	.39	74LS299	1.74
74LS122	.45	74LS323	3.50
74LS123	.79	74LS365	.49
74LS124	2.90	74LS367	.45
74LS125	.49	74LS368	.48
74LS126	.49	74LS373	1.19
74LS132	.59	74LS374	1.39
74LS136	.39	74LS377	1.39
74LS138	.95	74LS390	1.19
74LS139	.55	74LS393	1.19
74LS145	1.20	74LS640	2.20
74LS148	1.35	74LS645	2.20
74LS151	.55	74LS670	1.49
74LS153	.55	74LS682	3.20
74LS154	1.90	74LS688	2.40
74LS155	.69	81LS95	1.49
74LS156	.69	25LS2521	2.80

7400

7400	.19	7492	.50
7401	.10	7493	.35
7402	.18	74100	1.75
7403	.19	74107	.30
7404	.19	74116	1.85
7405	.25	74121	.29
7406	.29	74122	.45
7407	.29	74123	.49
7408	.24	74125	.45
7409	.19	74126	.45
7410	.19	74132	.45
7411	.25	74145	.60
7413	.35	74148	1.20
7414	.49	74150	1.35
7416	.25	74151	.55
7417	.25	74153	.55
7420	.18	74154	1.25
7421	.35	74155	.75
7425	.29	74157	.55
7427	.29	74159	1.65
7430	.19	74161	.69
7432	.29	74163	.69
7437	.29	74164	.85
7438	.29	74165	.85
7442	.49	74166	1.00
7445	.69	74173	.75
7447	.96	74174	.89
7448	.69	74175	.89
7473	.34	74185	2.00
7474	.33	74192	.79
7475	.45	74193	.79
7476	.35	74194	.85
7483	.50	74259	2.25
7485	.59	74367	.65
7489	2.15	74388	.65
7490	.35	74393	1.35

74S00

74S00	.32		
74S02	.35		
74S04	.35		
74S05	.35		
74S08	.35		
74S10	.35		
74S11	.35		
74S20	.35		
74S32	.40		
74S37	.88		
74S74	.50		
74S86	.50		
74S112	.50		
74S124	2.75		
74S132	1.24		
74S133	.45		
74S138	.85		
74S139	.85		
74S140	.55		
74S151	.95		
74S153	.95		
74S157	.95		
74S158	.95		
74S161	1.95		
74S163	1.95		
74S174	.95		
74S175	.95		
74S240	2.20		
74S241	2.20		
74S244	2.20		
74S280	1.95		
74S287	1.90		
74S288	1.90		
74S373	2.45		
74S374	2.45		
74S471	4.95		

★★★★HIGH TECH★★★★

41256 262144x1 DYNAMIC RAM

- PIN COMPATABLE WITH 4164
- LOW POWER CONSUMPTION: 350mW ACTIVE 23mW STANDBY
- FAST/ 150-200ns VERSIONS AVAILABLE

150ns	200ns
$44.95	$39.95

★★★★SPOTLIGHT★★★★

CRYSTALS

32.768Khs	1.95
1.0Mhz	3.95
1.8432	3.95
2.0	2.95
2.4576	2.95
3.579545	2.95
4.0	2.95
5.0	2.95
5.0688	2.95
6.0	2.95
6.144	2.95
8.0	2.95
10.0	2.95
10.738635	2.95
14.31818	2.95
15.0	2.95
16.0	2.95
17.430	2.95
18.432	2.95
20.0	2.95

UARTS

AY5-1013	3.95
AY3-1015	6.95
TR1602	3.95
2651	8.95
IM6402	7.95

BIT-RATE GENERATORS

BR1941	11.95
4702	12.95
COM8116	10.95
14411	11.95

MISC.

3242	7.95
MC3470	4.95
AY5-3600PRO	11.95
HD485055P	15.95
CRT5027	19.95

LINEAR

TL084	2.19	NE564	2.95
LM301	.34	LM565	.99
LM307	.45	LM566	.49
LM308	.69	NE592	.98
LM309K	1.25	LM733	.98
LM310	1.75	LM741	.35
LM311	.64	LM747	.69
LM317T	1.19	LM1310	1.49
LM317K	3.95	MC1330	1.69
LM318	1.49	MC1372	6.85
LM323K	4.95	LM1458	.66
LM324	1.19	LM1488	.69
LM331	3.95	LM1489	.88
LM334	1.19	LM1496	.85
LM335	1.50	LM1800	2.37
LM336	1.75	LM1812	6.25
LM337T	1.95	LM1889	1.95
LM338K	6.95	ULN2003	2.49
LM339	.99	XR2006	3.75
LM348	.99	XR2211	5.25
LM350K	4.95	CA3146	1.85
LF351	.60	LM3900	.59
LF353	1.00	LM3911	2.26
LF356	1.10	LM3914	3.95
LF357	1.40	MC4024	3.95
LM358	.69	MC4044	4.50
LM359	1.79	RC4136	1.26
LM377	1.95	75150	1.95
LM383	1.95	75154	1.95
LM386	.89	75188	1.95
LM393	1.29	75418	1.95
LM393	1.29	75451	.39
TL497	3.25	75453	.39
NE555	.34	75462	.39
NE556	.65	75492	.79

T YO-220 K TO-3

VISIT OUR NEW, EXPANDED RETAIL STORE AT 1256 SOUTH BASCOM IN SAN JOSE

HOURS: M-W-F, 9-5 T-TH.. 9-9 SAT.. 10-3

JDR Microdevices

1224 S. Bascom Avenue, San Jose, CA 95128
800-538-5000 • 800-662-6279 (CA)
(408) 995-5430 • Telex 171-110
FAX (408) 275-8415

PLEASE USE YOUR CUSTOMER NUMBER WHEN ORDERING

TERMS: Minimum order $10. For shipping and handling include $2.50 for UPS Ground and $3.50 for UPS Air. Orders over 1 lb. and foreign orders may require additional shipping charges — please contact our sales department for the amount. CA residents must include 6% sales tax, 5% Area and LA residents include 6½%. Prices subject to change without notice. We are not responsible for typographical errors. We reserve the right to limit quantities and to substitute manufacturer. All merchandise subject to prior sale.

© Copyright 1984 JDR Microdevices

CIRCLE 74 ON FREE INFORMATION CARD

www.americanradiohistory.com

PARTIAL LISTING ONLY- PLEASE CALL OR WRITE FOR FREE CATALOG.

CAPACITORS

ELECTROLYTIC

RADIAL			AXIAL		
.47uf	50v	.14	10	50v	.18
10	50v	.15	22	16v	.14
47	35v	.18	47	50v	.20
100	16v	.18	100	15v	.20
220	35v	.20	150	25v	.25

50v MONOLITHIC

.01uf	.14	.1	.05
.047	.15	.47	.25

50v DISC

10pf	.05	470	.05
22	.05	560	.05
25	.05	680	.05
27	.05	820	.05
33	.05	.001uf	.05
47	.05	.0015	.05
56	.05	.0022	.05
68	.05	.005	.05
82	.05	.01	.07
100	.05	.02	.07
220	.05	.05	.07
330	.05	.1	.12

SPECIALS ON BYPASS CAPS

.01uf disc	50v	100/6.00
.1uf disc	12v	100/8.00
.01uf mono	50v	100/12.00
.1uf mono	50v	100/15.00

ACCESORIES & PERIPHERALS

FOR IBM

MAXIMIZER Memory Multifunction	259.95
HAYES SMARTMODEM 1200B	419.95
PC PEACOCK Color Display Adaptor	239.95
130W POWER SUPPLY	175.00
PROTOTYPE CARD	27.95
PROTOTYPE CARD With Decoding	29.95

FOR APPLE

JDR 16K RAM CARD	39.95
BAL-500 ½ Ht. Disk Drive, Teac Mechanism	169.95
MITAC AD-1 Full Height, Shugart Mechanism	179.95
DISK CONTROLLER CARD	49.95
OMNIGRAPH Parallel Graphics Card	79.95
VIEWMAX-80 80 Column For Apple II+	159.95
VIEWMAX-80e 80 Column For Apple IIe	129.95
THUNDERCLOCK Official PRODOS Clock	129.95
KRAFT JOYSTICK	39.95
60W POWER SUPPLY	49.95

MISCELLANEOUS

ZENITH ZVM-123 15 MHz Green Monitor	105.00
NEC JB1201M 20 MHz Green Monitor	169.00
BMC BM-AU9191U Comp. 13" Color Monitor	279.00
BMC BX-80 PRINTER	249.00
NASHUA DISKETTES SS/SD Box of 10	19.95
VERBATIM DATALIFE DISKETTES DS/DD	34.95
DISKETTE FILE Holds 70 Diskettes	16.99

BARGAIN HUNTERS CORNER

FLOPPY SALE

FD200-8 for IBM PC — **$185.00**
- ★ Manufactured by Siemens w/ 90 day warranty
- ★ 8" Double sided, double density
- ★ Manual included
- ★ NEW (not surplus as sold by others)

MPI-B52 for IBM PC — **$139.95**
- ★ Manufactured by MPI w/ 90 day warranty
- ★ 5¼" DS-DD, better than Tandon
- ★ NEW (not surplus as sold by others)

BAL-525 for APPLE][— **$139.95**
- ★ ½ Height — ALPS mechanism
- ★ 100% Apple compatible
- ★ Full 1 YEAR WARRANTY

NEW

DISKETTES

NASHUA SS/DD WITH HUB RING	$15.95
VERBATIM DATALIFE DS/DD	$29.95

SPECIALS END 11/30/84

5¼" DISK DRIVES

TANDON TM100-2	DS/DD	199.00
SHUGART SA400L	SS/DD	199.95
MPI B52	DS/DD	139.95
TEAC FD55B ½ Ht.	DS/DD	159.00
TEAC FD55F ½ Ht.	DS/Quad	200.00

8" DISK DRIVES

SIEMENS FD200-8	DS/DD	195.00
SIEMENS FD100-8	SS/DD	149.95

IC SOCKETS/DIP CONNECTORS

LEADS	LOW PROFILE SOLDERTAIL 1-99pcs.	LOW PROFILE SOLDERTAIL 100&up	3 LEVEL WIREWRAP 1-99pcs.	3 LEVEL WIREWRAP 100&up	TEXTOOL ZERO INSERTION ZIFxx	COMPONENT CARRIES ICCxx	IDC PLUG RIBBON CABLE IDPxx
8	.12	.11	.59	.49	---	.65	---
14	.15	.12	.69	.52	5.95	.75	1.45
16	.17	.13	.69	.56	5.95	.85	1.65
18	.20	.18	.99	.90	---	1.00	---
20	.29	.27	1.09	.96	---	1.25	---
22	.30	.27	1.35	1.25	---	1.25	---
24	.30	.27	1.49	1.35	7.95	1.35	2.60
28	.40	.32	1.69	1.49	8.95	1.60	---
40	.49	.39	1.99	1.80	10.95	2.10	4.15
64	4.25	---	---	---	---	---	---

IDC CONNECTORS

DESCRIPTION	ORDER BY	CONTACTS 20	26	34	40	50
RIBBON HEADER SOCKET	IDSxx	1.86	2.43	3.16	3.73	4.65
RIBBON EDGE CARD	IDExx	2.36	2.65	3.25	3.80	4.74

ORDERING INSTRUCTIONS: Insert the number of contacts in the position marked "xx" of the "order by" part number listed. EXMAMPLE: A 20 pin ribbon edge card would be IOE 20.

SWITCHING POWER SUPPLIES

KEPCO/TDK MODEL MRM174KF	ASTEC MODEL AA11190
+5V @ 5A	-5V @ 4A
+12V @ 2A	+12V @ 2.5A
+12V @ 2.8A	-5V @ .25A
-12V @ .5A	-12V @ .30A
49.95	39.95

LIGHT EMITTING DIODES

JUMBO

	1-99	100-up
RED	.10	.09
GREEN	.18	.15
YELLOW	.18	.15

DISPLAYS

MAN-72	CA .3"	.99
MAN-74	CC .3"	.99
FND-500	CC .5"	1.49
FND-507	CA .5"	1.49

D-SUBMINIATURE

DESCRIPTION		ORDER BY	CONTACTS 9	15	25	37
SOLDER CUPS	MALE	DBxxP	2.05	2.69	2.50	4.80
	FEMALE	DBxxS	2.66	3.63	3.25	7.11
RT. ANGLE PC SOLDER	MALE	DBxxPR	1.65	2.20	3.00	4.83
	FEMALE	DBxxSR	2.18	3.03	4.42	6.19
IDC RIBBON CABLE	MALE	IDBxxP	3.17	4.70	6.23	9.23
	FEMALE	IDBxxS	3.69	5.13	6.84	10.08
HOODS	BLACK	HOOD-B	---	---	1.25	---
	GREY	HOOD	1.60	1.60	1.25	2.95

MOUNTING HAROWARE-$1.00
FOR ORDERING INSTRUCTIONS, SEE IDC CONN. ABOVE.

9000

9334	2.50
9368	3.95
9602	1.50

INTERSIL

ICL7107	12.95
ICL7660	2.95
ICL8038	3.95

DIP SWITCHES

4 position	.85
6 position	.90
7 position	.95
8 position	.95

TRANSISTORS

2N2222	.25	PN2907	.25
PN2222	.10	2N3055	.79
2N2905	.50	2N3904	.10
2N2907	.25	2N3906	.10

DISCRETE

1N751	5.1v zener	.25
1N759	12.0v zener	.25
1N4148	(1N914) switching	25/1.00
1N4004	400PIV rectifier	10/1.00
KBP02	200PIV 1.5a bridge	.45
4N33	OPTO-ISOLATOR	1.75

RIBBON CABLE

CONTACTS	SINGLE COLOR 1'	SINGLE COLOR 10'	COLOR CODED 1'	COLOR CODED 10'
26	.75	6.90	1.32	11.80
34	.98	8.50	1.65	14.50
50	1.38	12.10	2.50	22.00

36 PIN CENTRONICS

CEN36 MALE SOLDER CUP	7.95
IDCEN36 MALE RIBBON CABLE	8.95
IDCEN36F FEMALE RIBBON CABLE	8.95

VOLTAGE REGULATORS

7805T	.75	7815T	.85
78M05C	.35	7805K	1.39
7808T	.75	78H05K	9.95
7812T	.75	7812K	1.39
7815T	.75	7812K	1.49
7824T	.85	78L05	.69
7905T	.85	79L05	.79
7912T	.85	79L12	.79

C,T TO-220, K TO-3, L TO-92

CMOS

4001	.25	4027	.45	4066	.39	4538	1.95
4002	.29	4028	.89	4069	.29	4543	1.19
4011	.25	4029	.79	4070	.35	4553	5.79
4012	.25	4040	.75	4071	.29	4584	.75
4013	.38	4042	.69	4081	.29	74C00	.35
4015	.39	4046	.85	4082	.29	74C04	.35
4018	.39	4047	.95	4093	.49	74C14	.59
4017	.89	4049	.35	4503	.65	74C74	.55
4018	.79	4050	.35	4511	.85	74C906	.95
4020	.75	4051	.79	4515	.89	74C922	4.49
4023	.29	4053	.79	4520	.79	74C923	4.95
4024	.65	4060	.89	4528	1.19	74C926	7.95

...Just a note to extend my appreciation for the excellent service on my first order from your company.
Placed order by 800 line...and a very helpful young lady got everything right.
...Thanks for the good service.

Robert H. Bainbridge

MasterCard VISA

ORDER TOLL FREE
800-538-5000
800-662-6279
(CALIFORNIA RESIDENTS)

© Copyright 1984 JDR Microdevices

CIRCLE 74 ON FREE INFORMATION CARD

www.americanradiohistory.com

CABLE TV

CONVERTERS
AND
DESCRAMBLERS

* JERROLD
* OAK
* ZENITH
* HAMLIN
* SCIENTIFIC ATLANTA
* SATELLITE DESCRAMBLERS
* CABLE KIT

LOW PRICES
QUANTITY DISCOUNTS

SEND $5.00 FOR CATALOG

R & M DISTRIBUTORS
PO BOX 266-R
BOSTON, MA 02190
(617) 871-5838

VISA MasterCard

CIRCLE 83 ON FREE INFORMATION CARD

ACTIVE RECEIVING ANTENNA

Gives excellent reception, 50 KHz to 30 MHz.

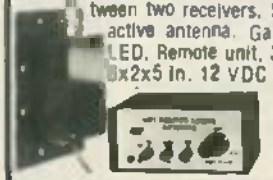

New MFJ-1024 Active Receiving Antenna mounts outdoors away from electrical noise for maximum signal.

Gives excellent reception of 50 KHz to 30 MHz signals. Equivalent to wire hundreds of feet long. Use any SWL, MW, BCB, VLF or Ham receiver.

High dynamic range RF amplifier. 54 in. whip, 50 foot coax, 20 dB attenuator prevents receiver overload. Switch between two receivers. Select auxiliary or active antenna. Gain control. "ON" LED. Remote unit, 3x2x4 in. Control, 3x2x5 in. 12 VDC or 110 VAC with optional adapter, MFJ-1312, $9.95.

$129.95 + $4.00 shipping

Order from MFJ and try it. If not delighted, return within 30 days for refund (less shipping).

One year unconditional guarantee.

Order today. Call TOLL FREE 800-647-1800. Charge VISA, MC. Or mail check, money order.

Write for free catalog. Over 100 products.

CALL TOLL FREE 800-647-1800

Call 601-323-5869 in Miss., outside continental USA, tech/order/repair info. TELEX 53-4590.

MFJ ENTERPRISES, INCORPORATED
Box 494, Mississippi State, MS 39782

CIRCLE 66 ON FREE INFORMATION CARD

TECHNICIANS,

Get serious about your profession;

CERTIFIED ELECTRONICS TECHNICIAN

Now you can order the "Study Guide for the Associate—Level CET Test" from the International Society of Certified Electronics Technicians. It includes material covering the most often missed questions on the Associate CET Exam. 8½" x 11", paperback, 80 pages.

GET CERTIFIED!

Send check to ISCET, 2708 W. Berry St., Ft. Worth, TX 76109.

Name _____
Address _____
City _____
State _____ Zip _____
____ copies @ $5.00 ea. _____
____ Send material about ISCET and becoming certified.

Network Sales, Inc.

GRAND OPENING RETAIL STORE

THOUSANDS OF ITEMS IN STOCK

DELUXE PARTS ASSORTMENTS

#1 Resistors & Trimpots
68 ¼ watt, 5% resistors & 5 PT-15 10K trimpots. 1 each - 51, 75, 100, 470, 1.5K, 3.6K, 51K, 470K, 13-1.2K, 2-220, 3-100K, 6-330, 6-12K, 7-810, 9-3.3K, & 14-4.7K
$4.95 ea. 10/45.00

#2 Capacitor "A"
Monolythics - 1-560pf, 7-.1 mfd, & 1-.22 mfd. Silver Micas - 2-10pf, & 1 each of 43pf, 110pf, 560pf, 1200pf, 3000 or 3300pf.
$4.95 ea. 10/45.00

#3 Capacitor "B"
Mylar - 4-.001, 2-.047, 29-.01. Radial lytics 3-10 mfd 16V, 1-1000 mfd 50V, 1-2200 mfd 35V. Disc Caps 1 each of 5, 12, 27, 36, 110, 330pf, 2-120pf, 3-39pf, 3-220pf, and 1 Vari Cap 5-35pf
$7.50 ea. 10/70.00

#4 Coil & Chokes
1 each of 15, 33, and 100 (uh) micro henries chokes. 1-variable RF coil (same as #49A537MPG)
$3.25 ea. 10/30.00

#5 IC's, Sockets, & Semi's
1 each of NE564, LM565, MC1330, MC1350, MC1496, LM1889, 7812, 7818, 2N2222A, MV2109, heat sink 2-MC1458, 4-1N4002, 4-8 pin, 2-14 pin, 1-16, & 1-18 pin socket
$13.50 ea. 10/125.00

#6 Misc. Hardware
LED & holder, fuse & holder, line cord grommet, SPST switch, DPDT switch, 2-F81 conn. & lugs, knob, 4-spacers, 6-screws & nuts, 2 RCI-174, matching transformer w/nut
$5.95 ea. 10/57.50

Network Sales, Inc.
90 TURNER AVE.
ELK GROVE VILLAGE, IL. 60007
312/952-1115
PHONE ORDERS WELCOME
OPEN MON-SAT. 9 to 5

CIRCLE 95 ON FREE INFORMATION CARD

MICROWAVE TV ANTENNA SYSTEMS

Freq. 2.1 to 2.6 GHz • 34 db Gain +

FIVE YEAR WARRANTY
PARTS & LABOR

COMPLETE SYSTEMS
(as Pictured)
Commercial 40"
Rod Style $ 99.95
Parabolic 20"
Dish Style $ 79.95
COMPONENTS
Down Converters
(both types) $ 34.95
Power Supplies
(12V to 16V) $ 24.95
Data Info (Plans) $ 9.95

CALL OR WRITE FOR KITS, PARTS, INDIVIDUAL COMPONENTS

We Repair All Types Down Converters & Power Supplies

Phillips-Tech Electronics
P.O. Box 34772
Phoenix, AZ 85067
(602) 967-6972

Special Quantity Pricing
Dealers Wanted

VISA COD'S

CIRCLE 29 ON FREE INFORMATION CARD

www.americanradiohistory.com

Radio Shack Parts Place®

Neighborhood Shopping! **Giant Selection!** **Factory-Fresh!**

Test Equipment

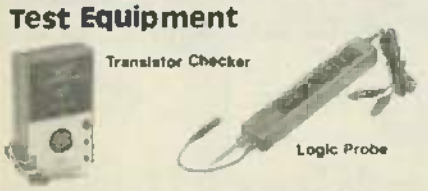

Dynamic Transistor Checker. LED indicates relative current gain, "opens" and "shorts". Socket plus hook-clip leads for in-circuit tests. Output jack for a meter or scope. 2¾ x 4¾ x 1¾". Requires "AA" battery. **22-025** **14.95**

Digital Logic Probe With Tone. The fast way to "peek inside" TTL, LS and CMOS digital circuits. Color-coded LEDs indicate high, low or pulsed states. Simultaneous tone output frees your eyes. Overload/polarity protected. **22-302** **19.95**

4000-Series CMOS ICs

With Pin-Out and Specs

Type	Cat. No.	Each
4001	276-2401	.99
4011	276-2411	.99
4013	276-2413	1.19
4017	276-2417	1.49
4049	276-2449	1.19
4066	276-2466	1.19

TTL Digital ICs

With Pin-Out and Specs

Type	Cat. No	Each
7400	276-1801	.89
7404	276-1802	.99
7408	276-1822	1.29
7447	276-1805	1.59
7490	276-1808	1.09

Operational Amplifiers

Type		Cat. No	Each
741	(Single)	276-007	.89
MC1458	(Dual)	276-038	.99
LM324	(Quad)	276-1711	1.29
TL082	(Dual)	276-1715	1.89
TL084	(Quad)	276-1714	2.99
LM3900	(Quad)	276-1713	1.39
LM339	(Quad)	276-1712	1.49
TLC271	(Single)	276-1748	1.59
TLC272	(Dual)	276-1749	2.19
TLC274	(Quad)	276-1750	2.99

Voltage Regulators

Type	Adjustable	Cat. No.	Each
LM723	0 to 40 VDC	276-1740	.99
LM317T	1.2 to 37 VDC	276-1778	2.79

Type	Fixed Output	Cat. No.	Each
7805	+5 VDC	276-1770	1.59
7812	+12 VDC	276-1771	1.59
7815	+15 VDC	276-1772	1.59
7905	−5 VDC	276-1773	1.59
7912	−12 VDC	276-1774	1.59

Compact SPST Reed Relays

Low-Profile Design, Ideal When Space Is Limited

Approx. 1" x 9/16". Pins for PC mounting. Contacts rated 1 amp at 125 VAC. Low-current coils.

5 VDC Coil. 275-232 ..... 1.49

12 VDC Coil. 275-233 ..... 1.49

Wire-Wrapping DIP Sockets

Pins	Cat. No.	Pkg. of 2
8	276-1988	1.19
14	276-1993	1.29
16	276-1994	1.39

Solder-Tail DIP Sockets

Pins	Cat. No.	Price
6	276-1995	2/59¢
14	276-1999	2/89¢
16	276-1998	2/89¢
18	276-1992	49¢ Ea.
20	276-1991	59¢ Ea
24	276-1989	79¢ Ea
28	276-1997	89¢ Ea
40	276-1996	99¢ Ea

Communications ICs

Type	Cat. No.	Each
XR 2206 AFSK Generator	276-2336	5.95
XR 2211 AFSK Decoder	276-2337	5.95
ICL8038 Function Gen.	276-2334	5.95
LM565 PLL	276-1720	1.99

RS-232C Line Driver, Receiver

Type	Cat. No	Each
MC1488 Driver	276-2520	1.79
MC1489 Receiver	276-2521	1.79

Replacement Transistors

Type		Cat. No	Each
2N1305	PNP	276-2007	1.19
MPS2222A	NPN	276-2009	.79
PN2484	NPN	276-2010	.89
MPS3904	NPN	276-2016	.69
TIP31	NPN	276-2017	.99
TIP3055	NPN	276-2020	1.59
MPS2907	PNP	276-2023	.79
MJE34	PNP	276-2027	1.49
2N3053	NPN	276-2030	.99
MPS3638	PNP	276-2032	.79
TIP120	NPN	276-2068	1.29
2N3055	NPN	276-2041	1.99
MJ2955	NPN	276-2043	2.19
2N4401	NPN	276-2058	.59
MPSA06	NPN	276-2059	.59
MPSA13	NPN	276-2060	.59
MPSA42	NPN	276-2061	.69
2SC945	NPN	276-2051	.79
2N3819	N-FET	276-2035	.99
MPF102	N-FET	276-2062	.99
IRF511	V-FET	276-2072	2.59
IRFD123	V-FET	276-2073	1.49
2SC1306	NPN	276-2055	7.95

Computer/Game Connectors

Type	Positions	Cat. No	Each
Solder Sub-D Male	9	276-1537	1.99
Solder Sub-D Female	9	276-1538	2.49
Hood for Above	9	276-1539	1.99
Solder Sub-D Male	15	276-1527	2.49
Solder Sub-D Female	15	276-1528	3.49
Hood for Above	15	276-1529	1.99
Solder Sub-D Male	25	276-1547	2.99
Solder Sub-D Female	25	276-1548	3.99
Hood for Above	25	276-1549	1.99
Solderless Sub-D Male	25	276-1559	4.99
Solderless Sub-D Fem	25	276-1565	4.99
Printer Connector	36	276-1534	6.99
Cable Socket	34	276-1525	3.19

¼-Watt, 5% Resistors

Pkg. of 5 **39¢**

Ohms	Cat. No
10	271-1301
100	271-1311
150	271-1312
220	271-1313
270	271-1314
330	271-1315
470	271-1317
1k	271-1321
1.8k	271-1324
2.2k	271-1325
3.3k	271-1328
4.7k	271-1330
6.8k	271-1333

Ohms	Cat. No
10k	271-1335
15k	271-1337
22k	271-1339
27k	271-1340
33k	271-1341
47k	271-1342
68k	271-1345
100k	271-1347
220k	271-1350
470k	271-1354
meg	271-1356
1 meg	271-1365

Monolithic Ceramic Caps

Epoxy Dipped ■ 50 WVDC

Value	Temperature Coefficient	Cat. No	Each
10 pF	NPO	272-151	69
100 pF	NPO	272-152	69
470 pF	NPO	272-153	69
1000 pF	Z5U	272-154	69
4700 pF	Z5U	272-155	69
.01 µF	Z5U	272-156	69
.047 µF	Z5U	272-157	69
.1 µF	Z5U	272-158	79

Voice Synthesizer IC

SPO256-AL2. A program with 59 speech sounds (allophones) is stored in its built-in ROM. Computer addressable to produce natural-sounding English words. Requires low-cost support parts and 3.12 MHz crystal (available from Shack). 28-pin DIP with data. Single 5 VDC supply. **276-1784** 12.95

Save Money, Install Your Own Phones

Easy-to-Understand, "How-to" Manual

Illustrated 150-page manual gives you step-by-step instructions for installing phones, dialers, answerers, ringers and wiring. Plus info on single and multi-line business systems. **62-1390** 5.95

Radio Shack

Prices apply at participating Radio Shack stores and dealers

A DIVISION OF TANDY CORPORATION

OVER 8800 LOCATIONS WORLDWIDE

CIRCLE 61 ON FREE INFORMATION CARD

www.americanradiohistory.com

DIGI-KEY CORPORATION

1-800-344-4539

AK., HI., 218-681-6674

VISA

QUALITY — Name brand Products from nationally recognized manufacturers.
SERVICE — Computerized order processing and inventory control
SAVINGS — Volume Discounts • OEM Quantity Pricing • Toll Free 800 Number

I.C. SOCKETS

GOLDEN TAIL DIP SOCKETS

WIRE WRAP DIP SOCKETS

Panasonic TSW Series

AMP CHAMP CONNECTORS

MOUNTING HARDWARE AVAILABLE SEPARATELY

SERVICE CHARGES

VOLUME DISCOUNT

"PRICES SUBJECT TO CHANGE WITHOUT NOTICE"

CIRCLE 65 ON FREE INFORMATION CARD

www.americanradiohistory.com

DIGI-KEY CORPORATION

1-800-344-4539

AK., HI., 218-681-6674

QUALITY — Name brand products from nationally recognized manufacturers.
SERVICE — Computerized order processing and inventory control.
SAVINGS — Volume Discounts • OEM Quantity Pricing • Toll Free 800 Number

AMP

MATE-N-LOK CONNECTORS

ELECTRO TAP SPLICES

PLUGS & RECEPTACLES

Plug

Receptacle

PINS

Pin

Socket

Standard Assembly Styles

BRIDGE RECTIFIERS
NOW AT DIGI-KEY
1.5 to 25 Amp
50 to 400 PIV/Leg

SUPER-STRIPS

National Semiconductor

BARON WIRE

SAXTON WIRE

DIGI-KEY Stocks Most A.P. Products

HANDLING CHARGES VOLUME DISCOUNT

$ 0.00-9.99	Add $2.00	$ 0.00-99.99	No Discount
$ 10.00-24.99	Add $1.75	$ 100.00-249.99	Less 10%
$ 25.00-49.99	Add $1.50	$ 250.00-499.99	Less 15%
$ 50.00-99.99	Add $1.25	$ 500.00-999.99	Less 20%
$100.00 & up	No Charge	$1000.00 & up	Less 25%

DIGI-KEY GUARANTEE: Any parts or products purchased from Digi-Key that prove to be defective will be replaced or refunded if returned within 90 days from receipt. "PRICES SUBJECT TO CHANGE WITHOUT NOTICE."

CIRCLE 65 ON FREE INFORMATION CARD

www.americanradiohistory.com

CIRCLE 60 ON FREE INFORMATION CARD

DON'T BLAME THE SOFTWARE!

Our Isolators eliminate equipment interaction, clean up interference, curb damaging power line spikes and lightning bursts.

ISO-1 ISOLATOR
3 isolated sockets; quality spike suppression; basic protection. . $81.95

ISO-3 SUPER-ISOLATOR
3 dual isolated sockets; suppressor; commercial protection. $122.95

ISO-17 MAGNUM ISOLATOR
4 quad isolated sockets; suppressor; laboratory grade protection. . $213.95

Electronic Specialists, Inc.
171 S Main Natick, MA 01760 (617) 655-1532
Toll Free Order Desk 1-800-225-4876
MasterCard, VISA, American Express

CIRCLE 6 ON FREE INFORMATION CARD

Electronics Paperback Books

NEW Paperbacks You'll Want To Read

CHECK OFF THE ONES YOU WANT

☐ ELECTRONIC SCIENCE PROJECTS...$8.95. Fascinating projects for any science fair includes circuits, graphs, diagrams and more

☐ INTRODUCTION TO 6502 MACHINE CODE...$8.95. Machine code programs run faster. Learn how you can write them for your computer

☐ A PRACTICAL INTRODUCTION TO MICROPROCESSORS...$8.95. The reader will construct his own simple microprocessor circuit and experiment with it to learn more about how microprocessors work

☐ MODEL RAILWAY PROJECTS...$8.95. Electronic projects that will make your model railroad more realistic in both appearance and sound

☐ ELECTRONICS SIMPLIFIED—CRYSTAL SET CONSTRUCTION...$4.95. All of these receivers are designed around modern inexpensive components and have sound data

☐ ART OF PROGRAMMING THE VIC 20...$8.95. What happens when you add the RAM bits. Screening, PEEK, POKE, PEEK, graphics and more

☐ WHITE'S RADIO LOG...$8.95. An updated directory of AM, FM and TV stations, including a section on communications stations

☐ 20 SOLDERLESS BREADBOARD PROJECTS—Book 2...$8.95. 20 more new projects based on COSMOS ICs that you can try in minutes on an electronic breadboard

☐ HOW TO GET YOUR ELECTRONIC PROJECTS WORKING...$8.95. When you can't get that home-built equipment to work, this book may have the answers you need

☐ 28 SIMPLE AMATEUR BAND ANTENNAS...$4.95. Inexpensive designs for effective, easy-to-build antennas ranging from a multi-purpose set of dimensional lattices

☐ 28 SIMPLE TROPICAL AND S.W. BAND ANTENNAS...$4.95. Antennas you can use for AM broadcast band reception and on 80, 75, 120 and 49-meter bands

☐ 20 PROGRAMS FOR THE ZX SPECTRUM & ZX81...$8.95. Studies with each program of a detailed flow chart for both games and practical applications in living, statistics and engineering

☐ 20 Programs for the ZX Spectrum & ZX81

☐ MULTI-CIRCUIT BOARD PROJECTS...$8.95. 21 simple projects that can all be built on one circuit board. Use the same components in several projects

☐ MICROINTERFACING CIRCUITS—Book 1...$8.75. In-depth coverage of how the microcomputer can interface add-on or all sorts to the home computer to transform it into a sophisticated piece of control equipment

☐ INTERNATIONAL DIODE EQUIVALENTS GUIDE...$8.75. Find substitutes when you need them for diodes from dynamo OCDs, photocouplers and display diodes

☐ BASIC PASCAL IN PARALLEL...$3.75. Develops programs in both languages simultaneously. Sample programs illustrate structure

☐ An Introduction to Programming the ATARI 400 and 800

☐ AN INTRODUCTION TO PROGRAMMING THE ATARI 400 & 800 XL...$8.95. This text is designed to combine the information provided by the manufacturer with Essential training for all Atari owners

☐ PRACTICAL ELECTRONIC BUILDING BLOCKS, Book 1...$8.75. Electronic circuits are all made up of individual building blocks. Study the blocks then combine them to build the circuits you need

☐ PRACTICAL ELECTRONIC BUILDING BLOCKS, Book 2...$8.75. Follow up to Volume 1 presents more building blocks for the experimenter

PRICES NOT VALID AFTER JANUARY 28, 1985

ELECTRONIC TECHNOLOGY TODAY INC. 11-84
P.O. Box 240, Massapequa Park, NY 11762

Number of books ordered ☐
Total Price of Books _____
Sales Tax (NY State Residents only) _____
Shipping and Handling (75¢ 1 or 2 books 30¢ each add. book) _____
TOTAL ENCLOSED _____
Name _____
Address _____
City _____ State _____ Zip _____

www.americanradiohistory.com

DoKay COMPUTER PRODUCTS, Inc.

ORDER TOLL FREE

(800) 538-8800

(CALIFORNIA RESIDENTS)

(800) 848-8008

VISA MasterCard

STATIC RAMS

2101	256 x 4 (450ns)		1.00
5101	256 x 4 (450ns)	(comm)	0.99
2102-1	1024 x 1 (450ns)		.99
2102L-4	1024 x 1 (450ns)	(LP)	99
2102L-2	1024 x 1 (250ns)	(LP)	1.45
2111	256 x 4 (450ns)		2.45
2112	256 x 4 (450ns)		2.95
2114	1024 x 4 (450ns)		.99
2114-25	1024 x 4 (250ns)		1.15
2114L-4	1024 x 4 (450ns)	(LP)	1.20
2114L-3	1024 x 4 (300ns)	(LP)	1.30
2114L-2	1024 x 4 (200ns)	(LP)	1.40
2125	1024 x 1		2.40
2147	4096 x 1 (55ns)		4.00
TMS4044-4	4096 x 1 (450ns)		3.45
TMS4044-3	4096 x 1 (300ns)		3.95
TMS4044-2	4096 x 1 (200ns)		4.40
MK4118	1024 x 8 (250ns)		5.00
TMM2016-200	2048 x 8 (200ns)		4.10
TMM2016-150	2048 x 8 (150ns)		4.90
TMM2016-100	2048 x 8 (100ns)		5.10
HM6116-4	2048 x 8 (200ns)	(comm)	4.75
HM6116-3	2048 x 8 (150ns)	(comm)	4.90
HM6116-2	2048 x 8 (120ns)	(comm)	5.00
HM6116LP-4	2048 x 8 (200ns)	(comm)	5.00
HM6116LP-3	2048 x 8 (150ns)	(comm)(LP)	5.00
HM6116LP-2	2048 x 8 (120ns)	(comm)(LP)	5.95
Z-6132	4096 x 8 (300ns)	(Static)	33.95
HM6264LP-15	8192 x 8 (150ns)	(comm)	39.95
HM6264LP-15	8192 x 8 (150ns)	(comm)	49.95

LP = Low Power Static = Quasi-Static

DYNAMIC RAMS

TMS4027	4044 x 1 (200ns)		1.95
UPD411	4096 x 1 (300ns)		2.95
HM6250	4096 x 1 (300ns)		2.95
MK4108	8192 x 1 (200ns)		1.90
HM6250	8192 x 1 (250ns)		1.30
4916-200	16384 x 1 (200ns)		.75
4116-150	16384 x 1 (150ns)		1.25
2118	16384 x 1 (150ns)	(5v)	4.00
4164-200	65536 x 1 (200ns)		4.45
4164-200	65536 x 1 (200ns)	(5v)	5.45
4164-150	65536 x 1 (150ns)	(5v)	6.45

5v = Single 5 Volt Supply

EPROMS

1702	256 x 8 (1us)		4.45
2708	1024 x 8 (450ns)		3.00
2758	1024 x 8 (400ns)		2.49
2758	1024 x 8 (450ns)	(5v)	5.00
2716	2048 x 8 (450ns)	(5v)	2.95
2716-1	2048 x 8 (350ns)	(5v)	5.00
TMS2516	2048 x 8 (450ns)	(5v)	9.45
TMS2716	2048 x 8 (450ns)		7.00
TMS2532	4096 x 8 (450ns)	(5v)	5.00
2732	4096 x 8 (450ns)	(5v)	4.45
2732-25	4096 x 8 (250ns)	(5v)	9.45
2732-20	4096 x 8 (200ns)	(5v)	11.45
2764	8192 x 8 (450ns)	(5v)	9.45
2764-25	8192 x 8 (250ns)	(5v)	7.45
2764-20	8192 x 8 (200ns)	(5v)	10.45
TMS2564	8192 x 8 (450ns)	(5v)	14.44
MCM6704	8192 x 8 (450ns)	(5v) (24 pin)	69.95
27128	16384 x 8 Call		24.45

5v = Single 5 Volt Supply

74LS00

74LS00	.23	74LS173	.99
74LS01	.24	74LS174	.54
74LS02	.24	74LS175	.54
74LS03	.24	74LS181	2.10
74LS04	.23	74LS189	8.80
74LS05	.24	74LS190	.99
74LS08	.27	74LS191	.99
74LS09	.28	74LS192	.79
74LS10	.24	74LS193	.79
74LS11	.34	74LS194	.99
74LS12	.34	74LS195	.99
74LS13	.44	74LS196	.79
74LS14	.58	74LS197	.79
74LS15	.34	74LS221	.99
74LS20	.24	74LS240	.84
74LS21	.28	74LS241	.99
74LS22	.24	74LS242	.99
74LS26	.28	74LS243	.99
74LS27	.28	74LS244	1.25
74LS28	.34	74LS245	1.45
74LS30	.24	74LS247	.74
74LS32	.28	74LS248	.99
74LS33	.54	74LS249	.99
74LS37	.34	74LS251	.59
74LS38	.34	74LS253	.59
74LS40	.24	74LS257	.59
74LS42	.48	74LS258	.59
74LS47	.74	74LS259	2.70
74LS48	.74	74LS260	.59
74LS49	.74	74LS266	.54
74LS51	.24	74LS273	1.45
74LS54	.28	74LS276	3.30
74LS55	.28	74LS279	.49
74LS83	1.28	74LS280	1.05
74LS73	.38	74LS283	.99
74LS74	.34	74LS290	.99
74LS75	.39	74LS293	.99
74LS76	.38	74LS295	.99
74LS78	.45	74LS298	.99
74LS83	.59	74LS299	1.70
74LS85	.99	74LS323	3.45
74LS86	.38	74LS324	1.70
74LS90	.54	74LS352	1.25
74LS91	.99	74LS353	1.25
74LS92	.54	74LS363	1.30
74LS93	.54	74LS364	1.80
74LS95	.74	74LS365	.49
74LS96	.99	74LS366	.49
74LS107	.36	74LS367	.44
74LS109	.38	74LS368	.44
74LS112	.58	74LS373	1.35
74LS113	.38	74LS374	1.35
74LS114	.38	74LS377	1.35
74LS122	.44	74LS378	1.13
74LS123	.79	74LS379	1.30
74LS124	2.05	74LS385	1.85
74LS125	.49	74LS388	.44
74LS128	.49	74LS390	1.15
74LS132	.59	74LS393	1.15
74LS133	.59	74LS395	1.15
74LS136	.38	74LS399	1.45
74LS137	.99	74LS424	2.80
74LS138	.54	74LS447	.99
74LS139	.54	74LS490	1.90
74LS145	1.15	74LS624	3.95
74LS147	2.45	74LS640	2.15
74LS148	1.38	74LS645	2.15
74LS151	.54	74LS668	1.65
74LS153	.54	74LS669	1.85
74LS154	1.85	74LS670	1.45
74LS155	.88	74LS674	9.80
74LS156	.88	74LS682	3.15
74LS157	.54	74LS683	2.15
74LS158	.58	74LS684	3.15
74LS160	.88	74LS685	3.15
74LS161	.84	74LS688	2.35
74LS162	.88	74LS689	3.15
74LS163	.54	74LS783	23.95
74LS164	.88	81LS95	1.45
74LS165	.94	81LS96	1.45
74LS166	1.00	81LS97	1.45
74LS168	1.70	81LS98	1.45
74LS169	1.70	25LS2521	2.75
74LS170	1.45	25LS2569	4.20

7400

7400	.18	7482	.94	74172	5.90
7401	.18	7483	.49	74173	.74
7402	.18	7485	.58	74174	.88
7403	.18	7486	.34	74175	1.75
7404	.18	7489	2.10	74176	.88
7405	.24	7490	.34	74177	.74
7406	.28	7491	.99	74178	1.10
7407	.28	7492	.49	74179	1.70
7408	.23	7493	.34	74180	.74
7409	.18	7494	.84	74181	2.20
7410	.18	7495	.54	74182	.74
7411	.24	7496	.59	74184	1.95
7412	.28	7497	2.70	74185	1.95
7413	.34	74100	1.70	74190	1.10
7414	.48	74107	.28	74191	1.10
7416	.24	74109	.44	74192	.78
7417	.24	74110	.44	74193	.78
7420	.18	74111	.54	74194	.84
7421	.34	74116	1.50	74195	.84
7422	.34	74120	1.15	74196	.76
7423	.28	74121	.28	74197	.74
7425	.28	74122	.44	74198	1.34
7426	.28	74123	.48	74199	1.34
7427	.28	74125	.44	74221	1.34
7428	.44	74126	1.44	74246	1.34
7430	.18	74128	.54	74247	1.24
7432	.28	74132	.44	74248	1.88
7433	.44	74136	.48	74249	1.98
7437	.28	74141	.84	74251	.74
7438	.28	74142	2.90	74259	2.20
7440	.18	74143	2.90	74265	1.30
7442	.48	74145	.59	74273	1.90
7443	.54	74147	1.75	74278	1.20
7444	.58	74148	1.75	74279	.74
7445	.58	74150	1.30	74283	1.95
7448	.88	74151	.54	74284	3.70
7447	.59	74152	.84	74285	3.70
7448	.58	74153	.54	74290	.94
7450	.18	74154	1.28	74293	.74
7451	.22	74155	.74	74298	.84
7453	.22	74156	.84	74351	2.20
7454	.22	74157	.54	74365	.84
7460	.22	74158	1.80	74366	.54
7470	.34	74160	.84	74367	.84
7472	.28	74161	.88	74368	.84
7473	.33	74162	.84	74375	2.15
7474	.32	74163	.58	74390	1.70
7475	.44	74164	.84	74393	1.30
7476	.34	74165	.84	74425	3.10
7480	.58	74166	.95	74426	.84
7481	1.05	74167	2.90	74490	2.50
		74170	1.50		

6500

1 Mhz

6502	4.90
6504	6.80
6505	6.80
6507	6.80
6520	4.30
6522	6.90
6532	6.90
6545	21.50
6551	10.85

2 Mhz

6502A	6.00
6522A	6.00
6532A	16.95
6545A	26.95
6551A	16.00

3 Mhz

65C02	6.00

6800

68000	58.95
6800	3.90
6802	7.90
6809	12.00
6809E	16.95
6809	10.95
6810	2.00
6820	4.30
6821	3.20
6828	13.95
6840	11.95
6843	33.95
6844	24.95
6845	13.95
6847	10.95
6850	3.20
6852	15.70
6860	9.00
6862	10.95
6875	6.00
6880	2.20
6883	21.95
68047	23.95
68488	10.95

1 Mhz

68000	9.95
68002	21.25
68009E	20.95
68809	20.95
68810	6.50
68821	6.00
68845	16.95
68850	5.90

APPLE COMPATIBLE JOYSTICK

29.95

16K RAM Card – Apple II+

- 2-Year Warranty

Assembled & Tested 39.95

For the APPLE HOBBIEST

DoKay KITS:

16K RAM card	24.95
80 Column Card II+	89.95
Z80 Card	69.95
Printer Card	24.95
80 Column Card IIE	89.95

KEYBOARD (99/4)

48 keys 4" x 10" 6.95

Reg. Power Supply

Model 4A/PS (99/4)

3 DC Outputs:

12V @ .4A, +5V @ 1.1A

−5V @ .2A Highly Filtered

6.95

TERMS: Minimum order $10.00

For shipping and handling include $2.50 for UPS ground or $3.50 for UPS Blue (air). For each additional air pound, add $1 for UPS Blue shipping and handling. California residents must include 6% sales tax; Bay area and LA residents include 6½% sales tax. Prices are subject to change without notice. We are not responsible for typographical errors. We reserve the right to limit quantities and to substitute manufacturers. All merchandise subject to prior sale.

CALL for VOLUME Quotes

HOURS: Mon – Fri. 7:30 to 5:00
Saturdays 10:00 to 3:00

VISIT OUR RETAIL STORE

2100 De La Cruz Blvd
Santa Clara, CA 95050
(408) 988-0697

ALL MERCHANDISE IS
100% GUARANTEED

Telex: 756440

DoKay

CIRCLE 5 ON FREE INFORMATION CARD

www.americanradiohistory.com

NEW! 40 CHANNEL VHF TO UHF CATV/VCR CHANNEL CONVERTER with Built In Amplifier and Fine Tuning
Our Price $32.95 ea.

CLOSEOUT — While They Last — TUSA CATV BLOCK CONVERTERS
CVU-40 Reg. $24.95 ea. $19.95 Closeout
CVU-1020 Deluxe Model Reg. $29.95 ea. $24.95 Closeout

TELEPHONE LINE ANALYZER Model 1042
$16.95 ea.
Model 1041 TELEPHONE PRODUCT TESTER
$329.95 ea.

POPULAR IC CHIPS

7 ELEMENT 75 OHM UHF TAB ANTENNAS
OPTIONAL Wideband UHF Amplifier Preamp Mast Gain 10 dB) $30.00 ea.
12 dB GAIN Specify Channel $9.95 ea. 5 OR MORE $7.95 EA.

SANYO UHF VARACTOR TUNERS 75 Ohm Input - 45 MHz Output For Channels 14 to 83
Now! $16.95 EACH
All units are brand new from Sanyo
Call for Quantity Price

Brand New NICAD BATTERIES
AA ... 3 for $3.69
C ... 3 for $5.69
D ... 3 for $5.69

75 OHM CABLE CONNECTORS
F-59 Male connector for RG 59U cable. Comes complete with your choice (specify) of ¼" or ⅜" crimp type ferrule.
100 for $10.50
300 ea.

COMPUGUARD The SOLUTION to Constant POWER PROTECTION
Compugard CPP-120 $59.95
Compugard CPP-13 $39.95
Both in OFF (30 bolt) or 4-Strip Socket

GEN INSTRUMENT LCC36 36 CHAN. CATV CONVERTER
$99.95 - $94.00 each

ISOTIP WAHL SOLDERING IRONS
$39.95 ea.

Car Stereo SIGNAL BOOSTER
Model BP-2000 Amplifier
Quad Price $24.95

Phone-A-Tenna EXTENDS CORDLESS TELEPHONE Autdial up to 3 Tenths!
Introductory Special $37.95

QUALITY POWER TRANSFORMERS
24V CT 800 mA
$3.19 ea. No. 48 $2.75 ea.
60 or more $2.25 ea.
For Larger Quantities Call

1N4001 DIODES
15 for $1.00 100 for $5.00

COLORMAX 36 CHANNEL REMOTE CATV CONVERTER
Now you can change channels or fine-tune your TV set by remote control up to 20 ft. away! This unit receives channels 2-13 plus mid & superband cable channels then outputs them on Channel 3.
MODEL CM36-3P
2 pc. REMOTE CONTROL
$69.95 ea.
3 or more $64.95 ea.

SURPLUS SYLVANIA VHF VARACTOR TUNERS
45 MHz Output Channels 2 through 13 as well as the mid band channels. Hookup data included.
WHILE THEY LAST!
$13.95 ea.
$29.95 ea.
$39.95 ea.

ORDER NOW TOLL FREE 800-854-4655 OUTSIDE CALIFORNIA
714-635-5090 INSIDE CALIFORNIA

R.F. ELECTRONICS
1086-C N. STATE COLLEGE BLVD. DEPT. R
ANAHEIM, CALIFORNIA 92806

MOST ORDERS SHIPPED WITHIN 24 HOURS — NO MINIMUM ORDER
ALL PREPAID ORDERS 2 LBS OR LESS MUST INCLUDE $2.00 SHIPPING & HANDLING — SHIPPED SAME DAY RECEIVED

CIRCLE 27 ON FREE INFORMATION CARD

AMAZING DEVICES

PERSONAL DEFENSE AND PROPERTY PROTECTION UTILIZE SPACE AGE TECHNOLOGY.
CAUTION THESE DEVICES CAN BE HAZARDOUS AND MAY SOON BE ILLEGAL.

PHASORS
POCKET PAIN FIELD GENERATOR — IPG50
Assembled ... $64.50
IPG5 ... Plans ... $8.00 IPG5K ... Kit/Plans ... $44.50
PHASOR PAIN FIELD CROWD CONTROLLER — PPF1D
Assembled ... $250.00
PPF1 ... Plans ... $15.00 PPF1K ... Kit/Plans ... $175.00
BLASTER — Provides a plasma discharge capable of puncturing a can
BLS1D ... Assembled ... $89.50
BLS1 ... Plans ... $10.00 BLS1K ... Kit/Plans ... $69.50
SHOCKER/PARALYZING DEVICE — Very intimidating and effective 5 to 10 feet
SHG80 ... Assembled ... $99.50
SHG5 ... Plans ... $10.00 SHG5K ... Kit/Plans ... $69.50

LASERS
RUBY LASER RAT GUN — Intense visible red beam burns and welds hardest of metals MAY BE HAZARDOUS.
RUB3 All Parts Available for Completing Device $15.00
CARBON DIOXIDE BURNING, CUTTING LASER — Produces a continuous beam of high energy MAY BE HAZARDOUS
LC5 All Parts Available for Completing Device $15.00
VISIBLE LASER LIGHT GUN — produces intense red beam for sighting, spotting, etc. Hand held complete
LGU3 Plans $10.00 (Kit & Assembled Units Available)
IR PULSED LASER RIFLE — Produces 15-30 watt infra-red pulses at 200-2000 per sec
LRG3 ... All Parts & Diodes Available ... $10.00
BEGINNERS LOW POWER VISIBLE LASER — Choice of red, yellow, green — provides an excellent source of monochromatic light
LHC2 ... Plans ... $5.00 LHC2K ... Kit ... $34.50

SECURITY
SNOOPER PHONE — Allows user to call his premises and listen in without phone ever ringing.
SNP20 ... Assembled ... $89.50
SNP2 ... Plans ... $9.00 SNP2K ... Plans/Kit ... $59.50
LONG RANGE WIRELESS MIKE — Miniature device clearly transmits well over one mile. Super sensitive, powerful
MFT1 ... Plans ... $7.00 MFT1K ... Plans/Kit ... $49.50
WIRELESS TELEPHONE TRANSMITTER — Transmits both sides of phone conversation over one mile, shuts on automatically
VWPM5 ... Plans ... $8.00 VWPM5K ... Plans/Kit ... $39.50
TALK & TELL AUTOMATIC TELEPHONE RECORDING DEVICE — Great for monitoring telephone use
TAT2D ... Assembled ... $24.50
TAT2 ... Plans ... $5.00 TAT2K ... Plans/Kit ... $14.50

Our phone is open for orders anytime. Technicians are available 9-11 a.m., Mon-Thurs for those needing assistance or information. Send for free catalog of hundreds more similar devices. Send check, cash, MO, Visa, MC, COD to: INFORMATION UNLIMITED
DEPT RB, P.O. Box 716 Amherst, N.H. 03031 Tel. 603 673-4730

CIRCLE 88 ON FREE INFORMATION CARD

ELECTRONIC PARTS - KITS - ACCESSORIES
RETAIL/WHOLESALE/SURPLUS
HOBBIESTS • EXPERIMENTERS • TECHNICIANS • REPAIRMEN

CAPACITORS - All types & values
RESISTORS - Standard values
IC'S - Popular linear & CMOS
POTS - PC mt., pannel mt., etc.
SWITCHES - Mini-toggle (AMF 5V/120 vac)
SPDT ... 1.00 ea.
DPDT ... 1.50 ea.
REGULATORS - 7851 (8.5V), 78T2, 7815, 7818 ... .75 ea.
CHOKES - 15µh, 33µh, 100µh, 1mh ... .50 ea.
OUTDOOR MATCHING TRANSFORMER ... 2.00 ea.
A-B SWITCH ... 3.00 ea.

UHF ANTENNA
4 BAY BOW-TIE
BEST-BUY FOR UNDER $50.00!
$14.95 ea./3 FOR $40.00
(Mounting Hardware Included)

UHF/VHF/FM ANTENNA AMPLIFIER (With FM Trap)
HIGH GAIN!
(25 DB AVERAGE)
••• A GREAT BUY! •••
$14.95 ea./3 for $40.00

SPEAKERS:
3" x 5" (8 Ohm, 2W) $1.50 ea./3 for $4.00
3" (Round) $1.00 ea /3 for $2.50
TRANSFORMERS:
120 20 vac. $4.00 ea /3 for $10.00
120/12 vac. $4.00 ea./3 for $10.00
STEREO AMP. HOBBY KIT (GREAT FOR TINKERING) $7.00 ea.
MUCH, MUCH, MORE!!!!

NEW DEAL ELECTRONICS
3462 N. PULASKI
CHICAGO, IL. 60641
(312) 286-0908

CURRENT SPECIALS
SEMICONDUCTORS:
1330 Generic (No marking) .80 ea.
LM386N .50 ea. or $35.00/100
NE564 2.00 ea.
565 Generic .70 ea.
1349 Generic 1.00 ea.
7815 (House #) .50 ea or $35.00/100
CAPACITORS:
470 µf Rad. Lytic .50 ea or $10/100
2200 uf Axial Litic 1.00 ea.
5-50 pf Trimcap .65 ea or $50/100
RESISTORS/POTS:
Resistor assortments (mixed values)
¼ Watt ... $2.00/100
½ Watt ... $5.00/100
1 Watt ... $10.00/100
25K CRL Vert. PC Trimpots .30 ea.
20K Pot (bourns 3386 type) .50 ea.
5K Pannel Mt. Pot + Knob .75 ea.
MUCH MORE!!!
SEND FOR FREE FLYER

X-TRA SPECIALS
7805 Regulator ... .50 ea.
.01 µf Mono Caps (50V) $12.00/100
.047 µf Mono Caps (50V) $12.00/100
Indoor Matching Transformer .50 ea.

ANY SIZE ORDER PUTS YOU ON OUR MAILING LIST. YOU WILL RECEIVE OUR UPDATED CATALOGS FREE OF CHARGE OR OBLIGATION.

TERMS
Check, Money Order or COD
Minimum Order $10.00
Add $2.50 S&H/$4.00 COD
IL. add 7% Sales Tax
(Allow 2-3 wks for personal checks)
Phone 10 AM - 5 PM Chicago Time

CIRCLE 83 ON FREE INFORMATION CARD

DON'T FORGET

USE YOUR READER SERVICE CARD

HIGH QUALITY UP TO 75dB GAIN

MICROWAVE TV SYSTEM

Varible from 1.9 to 2.5 GHz

The latest advance in microwave technology with a SNOW-FREE PICTURE.

Two Models to choose from
Both Models Include:
- 20" Parabolic Dish
- Pre-assembled Probe with Down Converter
- Power Supply and Coax Switch
- 60' of RG-59 U Coax with Connector
- Transformer for 75 to 300 Ohms
- All Mounting Hardware for Fast and Easy Installation

20" Fiberglass Dish
Up to 55dB Gain
Special $98.95

20" Aluminum Dish
Up to 55dB Gain
Low Priced $98.95

Add 10% for Foreign orders or U.S. Parcel Post

High Gain Yagi Antenna with Down Converter and Power Supply Complete System, Ready to Use. $89.95

Send $2.00 for Catalog. Refundable with first purchase
Available thru Mail and Phone Orders Only
20% deposit for COD. CA Res add 6½% Tax.
Send Cashiers Check or Money Order to.
(Personal Checks, allow 2-6 weeks to clear)

PROFESSIONAL VIDEO, Inc.
4670 Hollywood Blvd., Hollywood, Calif. 90027
For C.O.D. Orders Call (213) 219-0227

CIRCLE 21 ON FREE INFORMATION CARD

www.americanradiohistory.com

RAMSEY

THE FIRST NAME IN ELECTRONIC TEST GEAR

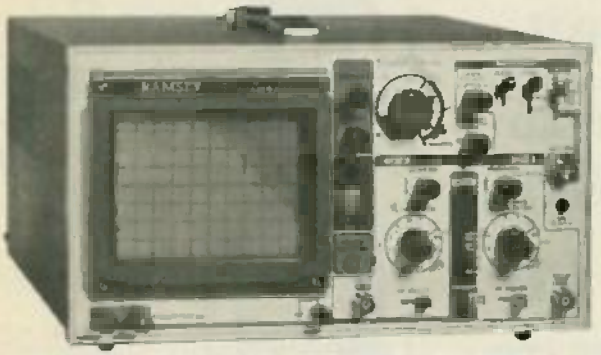

20 MHz DUAL TRACE OSCILLOSCOPE

Unsurpassed quality at an unbeatable price, the Ramsey oscilloscope competes to others costing hundreds more. Features include a component testing circuit for resistor, capacitor, digital circuit and diode testing • TV video sync filter • wide bandwidth & high sensitivity • internal graticule • front panel trace rotator • Z axis • high sensitivity x-y mode • regulated power supply • built-in calibrator • rock solid triggering

$399.95 high quality hook on probes included

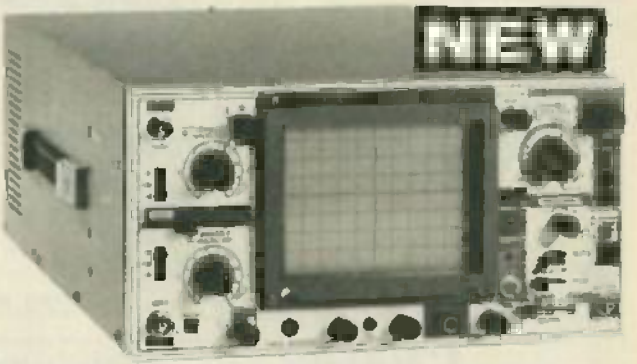

45 MHz DUAL SWEEP OSCILLOSCOPE

The Ramsey 625 is a dual time base, delayed sweep unit that includes a built-in signal delay line to permit clear viewing during very short rise times of high frequency waveforms. Other features include, variable trigger holdoff • 20 calibrated sweep time ranges from 0.1 s/div to 0.2 µs/div • fully adjustable sweep time • X5 sweep magnification • five trigger sources, CH1, CH2, LINE, EXTernal and INTernal (V mode) • front panel x-y operation, Z axis input • sum, difference of CH1 and CH2 waveforms displayed in single trace • sweep gate and sweep output • auto focus • single sweep

$799.95 high quality hook on probes included

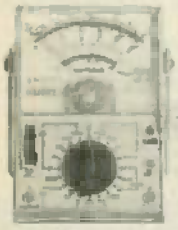

RAMSEY D-1100 VOM MULTITESTER

Compact and reliable, designed to service a wide variety of equipment. Features include • mirror back scale • double-jeweled precision moving coil • double overload protection • an ideal low cost unit for the beginner or as a spare back-up unit.

$19.95 test leads and battery included

NEW RAMSEY 1200 VOM MULTITESTER

Check transistors, diodes and LEDs with this professional quality meter. Other features include; decibel scale • 20K volt metering system • 3½" mirrored scale • polarity switch • 20 measuring ranges • safety probes • high impact plastic case

$24.95 test leads and battery included

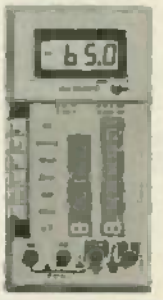

RAMSEY D-3100 DIGITAL MULTIMETER

Reliable, accurate digital measurements at an amazingly low cost • in-line color coded push buttons, speeds range selection • abs plastic tilt stand • recessed input jacks • overload protection on all ranges • 3½ digit LCD display with auto zero, auto polarity & low BAT. indicator

$49.95 test leads and battery included

CT-70 7 DIGIT 525 MHz COUNTER

Lab quality at a breakthrough price. Features • 3 frequency ranges each with prescaler • dual selectable gate times • gate activity indicator • 20mV @ 150 MHz typical sensitivity • wide frequency range • 1 ppm accuracy

$119.95 wired includes AC adapter

CT-70 kit $99.95
BP-4 nicad pack 8.95

CT-90 9 DIGIT 600 MHz COUNTER

The most versatile for less than $300. Features 3 selectable gate times • 9 digits • gate indicator • display hold • 25mV @ 150 MHz typical sensitivity • 10 MHz timebase for WWV calibration • 1 ppm accuracy

$149.95 wired includes AC adapter

CT-90 kit $129.95
OV-10 0.1 PPM oven timebase 34.95
BP-4 nicad pack 8.95

CT-125 9 DIGIT 1.2 GHz COUNTER

A 9 digit counter that will outperform units costing hundreds more • gate indicator • 24mV @ 150 MHz typical sensitivity • 9 digit display • 1 ppm accuracy • display hold • dual inputs with preamps

$169.95 wired includes AC adapter

BP-4 nicad pack 8.95

CT-50 8 DIGIT 600 MHz COUNTER

A versatile lab bench counter with optional receive frequency adapter, which turns the CT-50 into a digital readout for most any receiver • 25 mV @ 150 MHz typical sensitivity • 8 digit display • 1 ppm accuracy

$169.95 wired

CT-50 kit $139.95
RA-1 receiver adapter kit 14.95

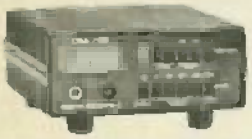

OM-700 DIGITAL MULTIMETER

Professional quality at a hobbyist price. Features include 26 different ranges and 5 functions • 3½ digit, ½ inch LED display • automatic decimal placement • automatic polarity

$119.95 wired includes AC adapter

DM-700 kit $99.95
MP-1 probe set 4.95

PS-2 AUDIO MULTIPLIER

The PS-2 is handy for high resolution audio resolution measurements, multiplies UP in frequency • great for PL tone measurements • multiplies by 10 or 100 • 0.01 Hz resolution & built-in signal preamp/conditioner

$49.95 wired

PS-2 kit $39.95

PR-2 COUNTER PREAMP

The PR-2 is ideal for measuring weak signals from 10 to 1,000 MHz • flat 25 db gain • BNC connectors • great for shifting RF • ideal receiver/TV preamp

$44.95 wired includes AC adapter

PR-2 kit $34.95

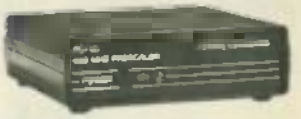

PS-1B 600 MHz PRESCALER

Extends the range of your present counter to 600 MHz • 3 stage preamp • divide by 10 circuitry • sensitivity: 25mV @ 150 MHz • BNC connectors • drives any counter

$59.95 wired includes AC adapter

PS-1B kit $49.95

ACCESSORIES FOR RAMSEY COUNTERS

Telescopic whip antenna—BNC plug	$ 8.95
High impedance probe, light loading	16.95
Low pass probe, audio use	16.95
Direct probe, general purpose use	13.95
Tilt bail, for CT-70, 90, 125	3.95

VISA MasterCard

PHONE ORDERS CALL
716-586-3950
TELEX 466735 RAMSEY CI

TERMS • satisfaction guaranteed • assuming for 10 days; if not pleased, return in original form for refund • add 8% for shipping and insurance to a maximum of $10.00 • overseas add 15% for surface mail • COD add $2.50 (COD in USA only) • orders under $15.00 add $1.50 • NY residents add 7% sales tax • 90 day parts warranty on all kits • 1 year parts & labor warranty on all wired units.

RAMSEY

RAMSEY ELECTRONICS, INC.
2575 Baird Rd.
Penfield, N.Y. 14626

CIRCLE 79 ON FREE INFORMATION CARD

www.americanradiohistory.com

pinecom™

64K APPLE II COMPATIBLE

ASSEMBLED AND TESTED

NOW ONLY **$399.00**

MICRO-II COMPUTER

100% APPLE COMPATIBLE

48K **$340.00**

64K **$399.00**

COOLING FAN

WITH SURGE SUPRESSOR AND 2 OUTLETS SALE PRICE

$39.00 EACH

AC POWER CENTER

WITH SURGE-SUPRESSOR
6 OUTLETS
4 CONTROLLED
2 UNCONTROLLED

$14.95 EACH

TILTABLE MONITOR STAND

$30.00 EACH

DISK BOX

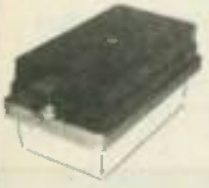

HOLDS 100 PCS. 5¼" DISKETTES WITH REMOVABLE TOP AND LOCKS

$14.95

DISK HOLEPUNCH

CONVERTS YOUR DISKETTES TO DOUBLE SIDED.

$8.99 EACH

HEAD

DISK DRIVE HEAD CLEANING KIT for 52" DISK DRIVES

SALE **$13.00** EACH

DISK DRIVES FOR YOUR APPLE

SUPER 5

T-40 SLIM DRIVE

OUR PRICE $175.00

ALPS-A40

SINGLE SIDED DRIVER HALF-HEIGHT

OUR PRICE $150.00

MSCI

FULL HEIGHT MODEL A2

SALE $190.00 EACH

ASUKA

HALF-HEIGHT THE MOST QUIET DRIVE IN THE MARKET

SALE $198.00

HEAVY DUTY JOY STICK

METAL CASE with 2 MICRO SWITCHES for APPLE II+ or IIE

SPECIAL **$19.95** EACH

SPECIAL

MINIATURE COMPUTER CLOCK

- LCD CLOCK WITH TIME AND DATE

AN IDEAL GIFT!

BUY 2 FOR ONLY **$9.00**

PRINTER by Super-5

Parallel Interface (Centronics Compatible)

- Standard Microprocessor Electronics
- 80cps Bidirectional with Logic Seeking
- 96 Character ASCII
- Adjustable Sprocket and Friction Feed

Model CP-80 ..... **$265.00**

12" Green

HIGH RES MONITOR with NON GLARE SCREEN by GORILLA

$99.00

Monitor Cable **$3.00**

THE BEST PRINTER CARD

GRAPHIC CARD by: PRACTICAL PERIPHERALS

- SUPPORTS ALL KINDS OF SOFTWARE
- SUPPORTS MOST MAKES OF PRINTERS
- DUMP GRAPHICS

OUR PRICE **$76.50**

COMPARE OUR PRICES ON APPLE COMPATIBLE PERIPHERALS

AUTOTERM 80 COLUMN CARD w/Soft Switch	$89.00
80 COLUMN CARD (Videx Compatible)	69.00
SOFT SWITCH for Videx 80 Column Card	35.00
Z80 CP/M CARD	69.00
16K RAM CARD (Language) Cabless	39.00
GRAPHIC PRINTER CARD (Support most Printers)	89.00
PARALLEL PRINTER CARD	59.00
SERIAL INTERFACE CARD (RS 232)	59.00
SUPER SERIAL CARD (Communication Card)	120.00
DISK CONTROLLER CARD (Standard)	45.00
DISK CONTROLLER CARD (3-2, 3-3 Auto Select)	55.00
EPROM PROGRAMMER CARD (for 2716/2732/2764)	75.00
128K RAM CARD (Saturn Compatible)	199.00
TTL IC TESTER CARD (for most TTL IC	160.00
RGB COLOR INTERFACE CARD	89.00
P.A.L. TV INTERFACE CARD (for European TV)	45.00
COPY CARD (Wildcard Compatible)	55.00
SPEACH SYNTHESIZER (SAM Card)	35.00
6809 INTERFACE CARD	170.00
CHINESE CRG GENERATOR CARD	CALL
8088 MS-DOS CARD	CALL

RF MODULATOR

Allows you to connect your computer to your Television. CH 3/4 Selectable

$12.95 EACH

FORMULA INTERNATIONAL INC.

12603 Crenshaw Blvd., Dept. B, Hawthorne, CA 90250

For information (213) 973-1921 • Orders Only (outside Calif.) (800) 672-8758

Minimum ORDER $15.00. CA Residents add 6% Sales Tax. Prices subject to change without notice.

SHIPPING AND HANDLING CHARGES

	Under $50.00 Purchase	Over $50.00 Purchase
Inside CA	10%	5%
Outside CA	15%	10%
Outside USA	25%	20%

STORE HOURS
Mon.-Fri 10am-7pm
Sat. 10am-6pm

PLEASE NOTE: A 10% restocking charge will be made to customer for all returned merchandise.

IBM is a registered trade mark of IBM.
CP/M is a registered trade mark of Digital Research.

CIRCLE 76 ON FREE INFORMATION CARD

www.americanradiohistory.com

mcm ELECTRONICS

WE HAVE WHAT YOU NEED AT THE PRICES YOU WANT!

CALL TOLL FREE
1-800-543-4330
(IN OHIO, 1-800-762-4315)

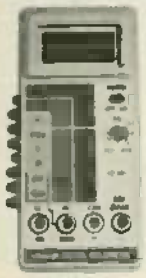

TENMA® 3½ DIGIT LCD MULTIMETER

- DC input impedance 10M ohm
- Diode and HFE Transistor tests
- Overload protection ■ Auto polarity ■ 2 year limited Warranty

#72-050 **$39.80**

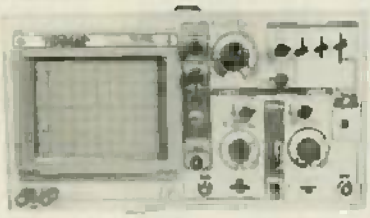

TENMA® 20MHZ DUAL TRACE OSCILLOSCOPE

Two High Quality 10:1 probes included. Backed by our 2 year limited warranty. For specifications see MCM Catalog #8 page 108.

#72-320 **$389.95**

TENMA® COMBINATION DMM/ CAPACITANCE METER
(With Transistor Gain Tester)

- User can easily read Voltage, AC and DC current, resistance up to 20M ohms, capacitance up to 20 microfarad, and HFE on a clear ½ inch, 3½ digit LCD display
- 2 year limited Warranty

#72-045 **$69.95** (2 or more)
$74.95 each

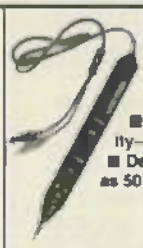

LOGIC PROBE WITH MEMORY

- Multi-family compatibility—DTL/TTL/HTL/CMOSIC
- Detects pulses as short as 50 nanoseconds

#72-190 **$19.95**

2-WAY SPLITTER

- Zinc diecast construction
- Power passive
- 5-900MHZ

#33-070 **89¢** (min 10)

6½" POLYPROPYLENE WOOFER

- Magnet Weight: 15 oz.
- Structure Weight: 3 lbs.
- Voice Coil: 1.5"
- Impedance: 8 ohms
- Power Handling: RMS/PEAK 45w/80w
- Free Air Res: 30 Hz
- Freq. Response: 35-2500 Hz
- Sensitivity SPL 1 WATT/1 METER:

#55-055 **$8.95** (min 2)
$15.90 each

10" PYLE WOOFER

- Magnet Weight: 18 oz.
- Structure Weight: 4.5 lbs.
- Voice Coil: 1.5"
- Impedance: 8 ohms
- Power Handling: RMS/PEAK 75w/150w
- Free Air Res: 40 Hz
- Freq. Response: 30-5500Hz
- Sensitivity SPL 1 WATT/1 METER: 95dB
- Manufacturer #W10C170-F

#55-100 **$19.90** each

OSCILLOSCOPE PROBE KIT

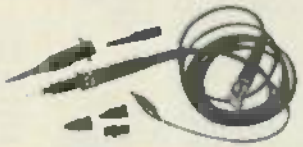

- Bandwidth: 10:1 position: 100MHZ at—3dB into 20pF
- Rise Time: 10:1 position less than 3.5$_{NS}$ nominal
- Kit contains: 10" earth lead, retractable hook, lc test tip, insulator, BNC adaptor and trimming tool.

#72-010 **$24.95** (5-up)
$26.95 (1-4)

POPULAR REPLACEMENT HI-FI TWEETER

- Phenolic ring design used in hundreds of domestic speaker systems
- Trim profile for easy mounting in tight spaces
- 4¼" diameter ■ 10 watt power handling capacity
- 3 oz. magnet ■ 2K-20K ■ 8 ohms

#53-020 **$2.90** (20-up)
$4.20 (1-3)

150 WATT CROSSOVER
(With protection circuit)

- Build your own high-quality 5-way speaker system. ■ These units can handle 150 watts RMS and feature a built-in protection circuit.
- Same crossover used in Jensen's System 8 ■ Crossover points: 0-300HZ, 300-1800HZ, 1800-7KHZ, 7KHZ-up; rear hi frequency 7KHZ-up. ■ Two L-pad controls included for upper mid frequency and high frequency. ■ 12 dB octave. ■ Comes complete with hook-up wire and instructions.

#50-170 **$11.75** (2-up)
$19.95 each

BE SURE TO CALL FOR YOUR FREE 120 PAGE CATALOG! *OVER 4,500 ITEMS!!*

AUDIO TECHNICA CARTRIDGE AT11E

- Bi-Radial (elliptical) diamond stylus
- Thin-wall tubular stylus cantilever
- Excellent replacement for older cartridges
- Frequency response 15 to 25,000Hz
- Tracking force 1½ to 2½ grams
- Audio Technica No. AT11E

#39-020 **$9.45** (10-up)
$9.95 (1-9)

We Also Have... a full line of test equipment, computer accessories, telephone accessories, speakers, television parts, flybacks, yokes, switches, fuses, lamps, capacitors, resistors, cartridges, styli, wire, CATV equipment, and many more. **Over 4,500 items AT THE LOWEST PRICES AROUND!**

Terms:
- $10 minimum order. $1.00 charge for orders under $10
- $20 minimum charge card order
- Orders shipped UPS C.O.D.
- Most orders shipped within 24 hours
- Sales office open 8:30am to 6:00pm Saturdays 10:00am to 3pm EST

mcm ELECTRONICS
858 East Congress Park Drive
Centerville, Ohio 45459
513-434-0031

We have the Largest Selection of Original Japanese Semiconductors in the Country

SOURCE NO. RE-2

CIRCLE 19 ON FREE INFORMATION CARD

www.americanradiohistory.com

Electronics Paperback Books

Quality Paperbacks at Affordable Prices

☐ **30 SOLDERLESS BREADBOARD PROJECTS BOOK-1. $6.75.** Whenever possible the same parts are used in several projects. Even a first-time builder can complete these circuits.

☐ **HOW TO GET YOUR ELECTRONIC PROJECTS WORKING. $6.95.** Helps you troubleshoot and repair home-built projects of every description.

☐ **MINI-MATRIX BOARD PROJECTS. $6.95.** A variety of projects that can all be built upon a mini-matrix board that has 10 strips and 34 holes long.

☐ **MODERN OP AMP PROJECTS. $6.95.** Wide range of specially designed op-amp circuits including hi-noise, hi-distortion, ultra-hi input impedance, etc.

☐ **MULTI-CIRCUIT BOARD PROJECTS. $5.00.** 21 fairly simple projects that can all be built on a single printed-circuit board. All are powered by a 9V battery.

☐ **IC PROJECTS FOR BEGINNERS. $5.00.** Inexpensive digital and linear ICs are used to assemble this selection of circuits intended for the beginner.

☐ **ART OF PROGRAMMING THE 16K ZX81. $6.25.** Topics include full screen, scrolling, PEEK & POKE, plus actual working programs.

☐ **THE 6809 COMPANION. $5.95.** Written for the average assembly language programmer. A discussion of 6809 features & reference work for the 6809 programmer.

☐ **PRACTICAL COMPUTER EXPERIMENTS. $4.95.** Fills in background to microprocessor by constructing typical computer circuits using discrete logic components.

☐ **ART OF PROGRAMMING THE 1K ZX81. $5.95.** How to use the features of the ZX81 in programs that fill the 1K machine and are still fun to use.

☐ **INTRODUCTION TO BASIC PROGRAMMING TECHNIQUES. $6.95.** Based on author's own experience in learning BASIC and helping others to learn to program.

☐ **6 MICROPROCESSOR PRIMER. $4.95.** Painless approach to computing for the beginner. Step-by-step explains computer operations and desirability.

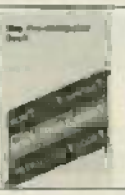

☐ **THE PRE-COMPUTER BOOK. $5.95.** Aimed at the absolute beginner with no knowledge of computers. A non-technical discussion that helps you enter the computer world painlessly.

☐ **AN INTRODUCTION TO VIDEO. $5.95.** Perfect for the person just about to buy a VCR. Discusses pros & cons of the various formats, video discs, videotape, tape copying and more.

☐ **BASIC & PASCAL. $4.95.** Takes BASIC & Pascal and develops programs in both languages simultaneously.

☐ **FIRST BOOK OF TRANSISTOR EQUIVALENTS & SUBSTITUTES. $3.75.**

☐ **PRACTICAL COMPUTER EXPERIMENTS. $4.50.**

☐ **ELECTRONICS SIMPLIFIED CRYSTAL SET CONSTRUCTION. $4.95.**

☐ **ELECTRONIC HOUSEHOLD PROJECTS. $4.95.**

☐ **POWER SUPPLY PROJECTS. $4.95.** Contains designs and construction details for almost any power supply the experimenter is likely to need.

☐ **REMOTE CONTROL PROJECTS. $5.00.** Radio-control infra-red, visible light, & ultrasonic systems are all included, along with methods of applying them.

☐ **ELECTRONIC TEST EQUIPMENT CONSTRUCTION. $4.95.** Construction details of a wide range of test equipment the experimenter can build at home.

☐ **ELECTRONIC PROJECTS USING SOLAR CELLS. $5.95.** Simple circuits that have numerous applications around the home.

☐ **ELECTRONIC TIMER PROJECTS. $5.00.** Timing circuits for almost any application the experimenter might need. A most valuable reference.

☐ **COUNTER DRIVER & NUMERICAL-DISPLAY PROJECTS. $4.50.** Features applications & projects using various types of numerical-display devices.

☐ **PRACTICAL ELECTRONICS CALCULATIONS AND FORMULAE. $7.50.** A basic reference work that bridges the gap between complicated technical theory & out and tried methods.

☐ **INTERNATIONAL DIODE EQUIVALENTS GUIDE. $6.75.** Helps you find substitutes for the many different types of semiconductor diodes in use today.

☐ **INTERNATIONAL TRANSISTOR EQUIVALENTS GUIDE. $7.50.** Products of more than 100 manufacturers are listed & cross-referenced with possible replacements.

☐ **HOW TO MAKE WALKIE TALKIES. $5.95.** Describes equipment for low-power handheld operation. 112 pages of must reading for the dedicated experimenter.

☐ **ELECTRONIC CALCULATOR USERS HANDBOOK. $3.95.** Presents formulas, data, methods of calculation, conversion factors & more from the view of the calculator user.

☐ **LINEAR IC EQUIVALENTS AND PIN CONNECTIONS. $6.25.** Shows equivalents & pin connections of a popular user-oriented selection of linear ICs.

☐ **PRACTICAL ELECTRONIC BUILDING BLOCKS—Book 1. $5.95.** All electronics circuits consist of simple building blocks. When you know how to assay the blocks you can easily create your own projects.

☐ **PRACTICAL ELECTRONIC BUILDING BLOCKS—Book 2. $5.95.** Circuits that process signals. Combines with those in Book 1.

☐ **SPECIAL OFFER Book 1 & Book 2 PRACTICAL ELECTRONIC BUILDING BLOCKS. $10.95. Shipping included. Save $1.75.**

☐ **RADIO CONTROL FOR BEGINNERS $4.95.**

☐ **ELECTRONIC GAMES $4.95.**

☐ **SINGLE IC PROJECTS $4.95.**

☐ **RADIO CIRCUITS USING ICS. $4.50.**

☐ **ELECTRONIC HOUSEHOLD PROJECTS. $4.95.**

☐ **ELECTRONIC MUSIC PROJECTS $4.95.**

☐ **POPULAR ELECTRONIC PROJECTS $3.75.**

☐ **PROJECTS IN OPTO-ELECTRONICS. $5.00.**

☐ **ANTENNA PROJECTS. $5.00.** Covers practical antenna designs including active, loop & ferrite types that are easy & inexpensive to build.

☐ **RADIO STATIONS GUIDE. $4.75.** Comprehensive listing of transmitters around the world. Presents location, frequency, power.

☐ **LONG DISTANCE TV RECEPTION (TVDX) FOR THE ENTHUSIAST. $5.95.** Practical & authoritative introduction to the unusual aspect of electronics.

☐ **CB PROJECTS. $5.95.** A number of useful and interesting designs for CB accessories. Speech processor, interference filter & more.

☐ **CRYSTAL SET CONSTRUCTION. $4.95.** Packed full of easy to duplicate designs for crystal radio receivers.

☐ **AN INTRODUCTION TO RADIO DX-ING. $5.00.** Using, in your home, to broadcasts originating thousands of miles away. Tells how you can do it.

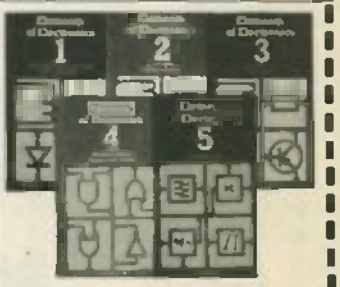

☐ **THE SIMPLE ELECTRONIC CIRCUIT & COMPONENTS. $6.75.** All the fundamental theory needed to lead to a full understanding of the simple electronic circuit and its components.

☐ **ALTERNATING CURRENT THEORY. $5.75.** Alternating current theory without which there can be no comprehension of speech, music, radio, or television.

☐ **MICROPROCESSING SYSTEMS & CIRCUITS. $7.95.** A truly comprehensive guide to all of the elements of a microprocessing system.

☐ **SEMICONDUCTOR TECHNOLOGY. $5.75.** Everything you always needed to know about solid-state devices in one volume.

☐ **COMMUNICATIONS $7.95.** Covers most modern communication systems. Line, microwave, submarine, satellite, digital multiplex, radio & telegraphy.

☐ **FIRST BOOK OF HI-FI SPEAKER ENCLOSURES. $4.95.**

☐ **SOLID STATE NOVELTY CIRCUITS. $3.50.**

☐ **30 TESTED TRANSISTOR PROJECTS. $4.25.**

ELECTRONIC TECHNOLOGY TODAY INC.
P.O. Box 240, Massapequa Park, NY 11762

RE 11/84

Number of books ordered ☐

Total Price of Books ..... $_____

Sales Tax (NY State Residents) .....

Shipping (75¢ 1st two books, 30¢ ea additional) .....

TOTAL ENCLOSED ..... $_____

Name_____

Address_____

City_____ State_____ ZIP_____

www.americanradiohistory.com

This will be coming to you when you subscribe to **Radio-Electronics**

- **HELPFUL CONSTRUCTION ARTICLES...**
  - Test Equipment
  - Hi-Fi Accessories
  - Telephone Accessories
  - Music Synthesizers
  - Computer Equipment
  - Automotive Equipment
  - Intruder Alarms-Home & Car
  - Video Accessories
- **NEWS ON NEW TECHNOLOGY**
  - Computers
  - Microprocessors
  - Satellite TV
  - Teletext
  - Automotive Electronics
  - Speech Synthesizers
  - IC Applications
- **FASCINATING "HOW TO DO IT" ARTICLES...**
  - Build Your Own Projects
  - Make Your Own PC Boards
  - Wiring Techniques
  - Soldering and Desoldering
  - Design and Prototyping

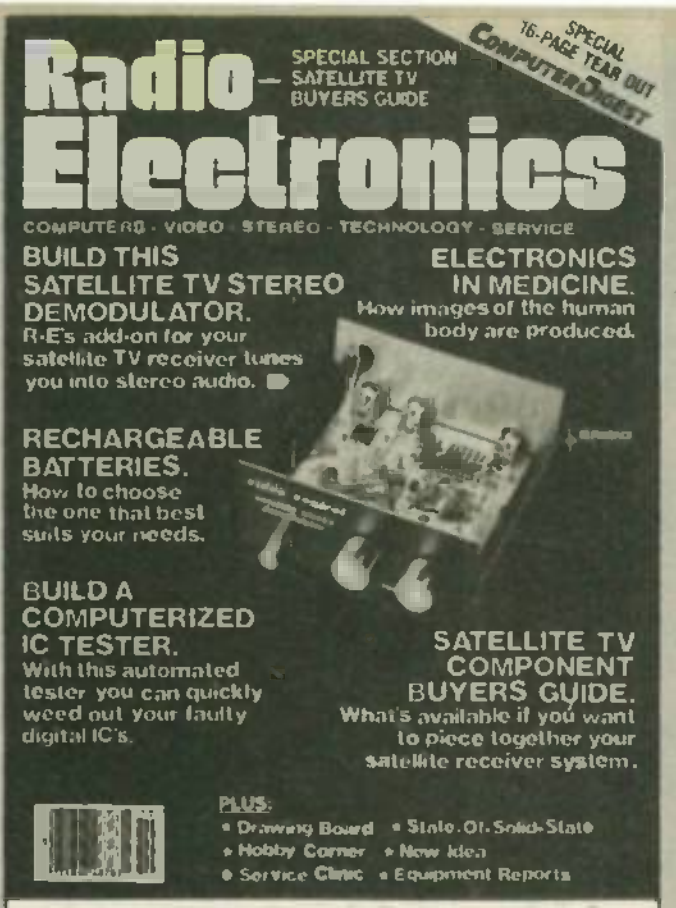

- **HOW YOU AND THE COMPUTER CAN BE FRIENDS...**
  - Getting Started
  - Programs, Circuit Design, Games
  - A/D-D/A Interfacing
  - Peripheral Equipment
- **NEW AUDIO DIMENSIONS FOR YOUR PLEASURE...**
  - Noise-Reduction Devices
  - How to Connect that Extra Add-On
  - Hi-Fi Accessories
  - New Technology
- **TV WONDERS FOR YOUR FUTURE...**
  - Latest Receivers and Circuits
  - The Home Entertainment Center
  - Projection TV Today
  - Satellite TV Receivers
  - Jack Darr's Monthly Service Clinic
  - Service Problems and Solutions
- **REGULAR MONTHLY FEATURES**
  - DESIGNERS NOTEBOOK by Robert Grossblatt
  - HOBBY CORNER by "Doc" Savage, K4SDS
  - STATE-OF-SOLID-STATE by Bob Scott
  - WHAT'S NEWS, new products, stereo news
  - VIDEOGAMES, new products, game reviews
  - and NEW IDEAS, STEREO PRODUCTS, NEW COMPUTER PRODUCTS FOR HOME/JOB and MUCH MORE!

Radio-Electronics covers all aspects of the fast moving electronics field...featuring COMPUTERS • VIDEO • STEREO TECHNOLOGY • SERVICE COMMUNICATIONS • PROJECTS

Get it all!

Subscribe today to Radio-Electronics! Don't miss a single issue and...you save as much as $22.83 off the single-copy price.

When you select one of the subscription offers listed on the handy coupon—you'll be assured of having your copy reserved, even if it sells out on the newsstand. Make sure you get all the excitement in every issue of Radio-Electronics, every month, by filling in and mailing the coupon, today.

Mail to: Radio-Electronics
P.O. Box 2520, Boulder, CO 80322

Every Month!
Get the Best—Mail Today!

7HL45

☐ 1 Year - 12 issues only $12.97 (You save $10.43 off the single-copy price.)
☐ 2 Years - SAVE MORE! - 24 issues - $23.97. (Save $22.83 off the single-copy price.)

☐ Payment Enclosed
☐ Bill Me

Name _____ (please print)

Address _____

City _____ State _____ Zip Code _____

Offer Valid in U.S. and Canada Only
Allow 6-8 weeks for delivery of first issue.

Canada—Add $3.00 per year
Offer Valid in U.S. Funds Only

www.americanradiohistory.com

SPARTAN Electronics Inc

CALL (516) 499-9500

MAIL 6094 Jericho Tpke. Commack, N.Y. 11725

CTC9R **Philips Remote Cable Converter**

* Micro computer technology * Quartz controlled * 1 inch on picture & prevent drift * 60 channel selections * Programmable time on & off * 24 hour LED digital clock * Favorite channel memory & recall (not scan) * Wireless hand held infra-red transmitter system * Automatic key tone * Adaptable to any brand television * One year warranty service

$139.95

SPEAKER PHONE

Model #30-9558
Hands Free Conversation
Modular Connectors
Push Button Dial
Volume Control
Mute Hold Button
Pulse/Tone Switchable
Last Number Redial

$44.95

GREEN AND AMBER MONITORS

12" Sakata Green $119.00
12" Sakata Amber $129.00

REFURBISHED MONITORS

9" and 12" Bell & Howells or GBC Commercial Grade as low as

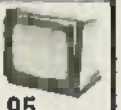

$10.00 off with a purchase of 2 refurbished monitors **$39.95**

BECKMAN CIRCUITMATE DM73

- .5% basic Vdc Accuracy **$63.95**
- probe-sized dmm
- 4 ac dc voltage ranges (autoranging)
- 4 resistance ranges (autoranging)
- continuity beeper
- "touch hold" button

Other Circuitmate Meters Available

Jerrold 58 Channel Wireless Remote Converter $109.95

Jerrold 36 Channel Remote CATV Converter w/on/off Fine Tuning $94.95

40 Channel VHF to UHF Block Converter

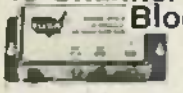

28.95 Ea.
24.95 4 & up

Deluxe Version - Features fine tuning knob, matching X former & 2 cables $38.95

BEFORE YOU PAY $$ FOR A TELEPHONE SERVICE CALL, TEST IT YOURSELF

EK PRECISION

Telephone Line Analyze Model #1042

- Tests telephone line functions that affect telephone operation
- Verifies line and ring voltage levels
- Checks condition of telephone line from central office to user's telephone jack
- Verifies telephone line polarity that can affect properly connected telephones

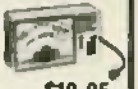

$19.95

PROFESSIONAL TELEPHONE PRODUCT TESTER

EK PRECISION

Features: MODEL 1045

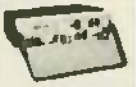

- Provides easy operation tests for cordless and cordless telephones, answering machines and automatic dialers
- Checks telephone line cords and handset cords for continuity, shorts and opens/cuts
- Verifies number stored and repeated by pulse or touch tone telephones
- Provides line and ringer load test for extensions
- Verifies that voice and ringer (Bell Tone/Melody) transmitted over an active telephone network
- Can be used by the telephone without any aid of a telephone—all tests by talkback instruction card is provided with the tester
- Can be used by the salesperson to demonstrate operation and features of telephone products and by people returning before buying an extension

$335.95

Delivery Procedure
Visa MC BAC Amex All above prices include 4% cash discount
C O D money order check Add for Shipping

Volume Discounts		
Min Order $25 00		
International shipping Add'l	to 75 00	$2 50
Prices subject to change	76 00 to 250 00	$4 50
without notice	251 00 to 500 00	$6 00
COD 2 00 Extra	501 00 to 750 00	$8 50
*Add'l shipping for monitors	751 00 to 1000 00	$12 00
	Over 1000 00	$12 50

(516) 499-9500 Mon Th Tu W F Sa 9-8 9-6 9:30-5

CIRCLE 36 ON FREE INFORMATION CARD

ADVERTISING INDEX

RADIO-ELECTRONICS does not assume any responsibility for errors that may appear in the index below.

Free Information Number		Page
77	Active Electronics	99
80	Advanced Computer Products	101
—	Advance Electronics	12-13,29
12	All Electronics	105
88	Amazing Devices	116
67	AMC Sales	91
92	Appliance Service	92
87	AP Products	15
72	AW Sperry	38
—	BEC Electronics	102
7	Beckman Instruments	27
16	B&K	44
85	Buyus Inc.	93
78	Caldwell	95
18	CEI	43
34	Chaney	104
64	Chemtronics	95
—	CIE	34-37
—	Command Productions	91
35,97, 26	Communications Electronics	4-5,31,39
50	Contact East	93
—	Coop's Satellite Digest	85
68	CPU	CD section 11
60	Diamondback	114
65	Digikey	112-113
5	Dokay	115
89	DX Tele Labs	93
58	EKI	96
22	Electron Research	100
6	Electronic Specialists	114
81,82	Electronic Warehouse	81,87
31	Elephant Electronics	93
39	Etronix	81
—	ETT	114,120
40	Firestik II	87
98	Fluke Manufacturing	7
—	Fordham Radio	23
76	Formula	118
33	Global Specialties	40
—	Grantham College of Engineering	11
45	Hameg Inc.	82
15,38	Heath	25
28	Instrument Mart	24
51	Iwatsu	Cover 2
41	Jameco	106,107
74	JDR	108,109
69	Jensen	92
44	J. Walter Satellite Receiver	92
93	McIntosh Labs	89
19	MCM	119
66	MFJ	110
84	Mouser	89
96	Nemal	92
63	New Deal Electronics	116
—	Newtone Electronics	83
95	Network Sales	110
—	NRI	16-19
—	NTS	52-55
30	OK Machine	42
90	Omnitron	32
49	Pace	28
53	Pais	89
29	Philips Tech Electronics	110
—	Phoenix Electronics	97
32	Pocket Tech	33
54	Pomona	Cover 3
8	Power Plus	92
21	Professional Video	116
52	PTS	26
—	Qualitone	97
61	Radio Shack	111
79	Ramsey	117
—	RCA	22
9	Regency	30
20	Renau	97
10	Research Service Lab.	93
27	RF Electronics	116
83	R&M Distributors	110
43	RSP Handy	103
25	Simpson	20
36	Spartan Electronics	122
55	TAB	41
73	Tekone	93
—	Tektronix	Cover 4
94	Trio Kenwood	1
99	Uniden Bearcat	9
17	Universal Electronics	93
70	Vamp	93
59	Wersi	91
56	WM B Allen	104
13	World Distributors	95
—	Zenith	2

Gernsback Publications, Inc.
200 Park Ave. South
New York, NY 10003
(212) 777-6400
Chairman of the Board: M. Harvey Gernsback
President: Larry Steckler

ADVERTISING SALES 212-777-6400

Larry Steckler
publisher
Arlene Fishman
advertising coordinator
Lisa Strassman
credit manager
Donna Goldstein
credit associate
Naomi Matten
advertising assistant

Sales Offices

EAST/SOUTHEAST

Stanley Levitan
Radio-Electronics
200 Park Ave. South
New York, NY 10003
212-428-6037, 212-777-6400

MIDWEST/Texas/Arkansas/Okla.

Ralph Bergen
Radio-Electronics
540 Frontage Road—Suite 325
Northfield, IL 60093
312-446-1444

PACIFIC COAST/ Mountain States

Marvin Green
Radio-Electronics
15335 Morrison St.—Suite 227
Sherman Oaks, CA 91403
818-986-2001

www.americanradiohistory.com

THE POMONA PROMISE

Our constant goal is to provide the design engineer with the best banana plugs and jacks made in this country. Or anywhere.

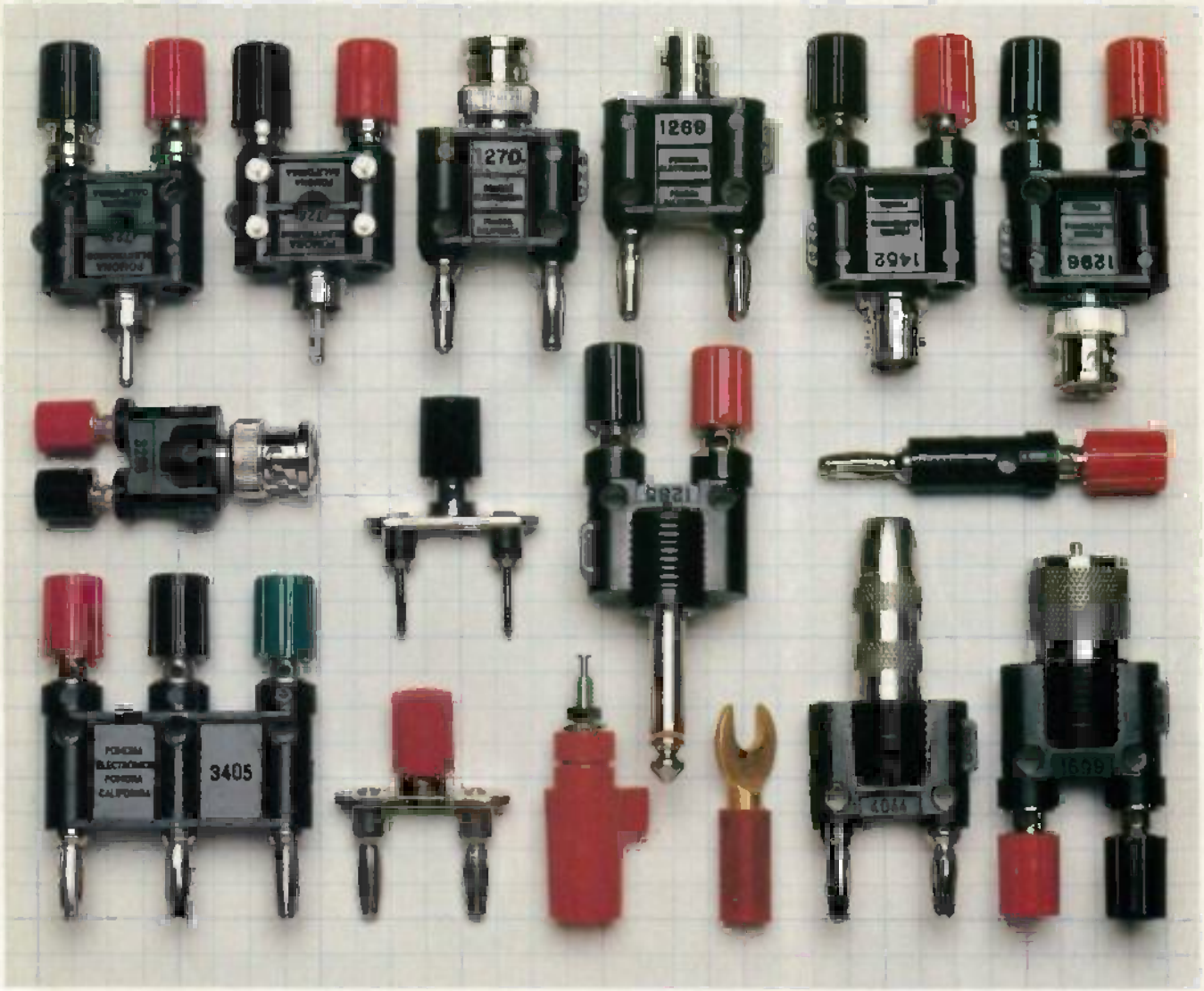

And we've been doing it for a long time. Since 1951 in fact.

That's when we promised there wouldn't be anyone in the world who could design and produce banana plugs and jacks the way we could.

The world agreed.

Naturally, as the years have passed, we've improved upon our original designs. So much so that today, our banana plugs and jacks are out there alone. In their own class.

The same can be said for every other product we design and produce. And each and every one of them is trusted by the professionals of the electronics industry.

At ITT Pomona Electronics, we know there is no such thing as standing pat. We also know that your needs change and your expectations become greater as the demands become more severe. To this end we will continue to create a better way. A better product.

That's a promise.

All of our products are described and illustrated in our General Catalog, and it's free. Just call (714) 623-3463 or 623-6751. TWX 910-581-3822. Write to us at ITT Pomona Electronics, a Division of ITT Corporation, 1500 E. Ninth St., Pomona, CA 91766.

In Europe: ITT CANNON BELGIUM S.A./N.V. Rue Colonel Bourg Str. 105 Space A (B.3) 1140 Brussels, Belgium. Phone: 02-735-6094.

Our products are available through your favorite electronics parts distributor.

ITT Pomona Electronics

CIRCLE 54 ON FREE INFORMATION CARD

www.americanradiohistory.com

TEK 2236 100 MHZ OSCILLOSCOPE

THE ANSWER BY ANY MEASURE

100 MHz scope, counter, timer, multimeter: All one integrated system.

100 MHz dual time base scope. 3.5 ns risetime; sweeps from 0.5 s to 5 ns/div; alternate sweep; ±2% vertical/horizontal accuracy; vertical sensitivity to 2 mV/div @ 90 MHz.

9-digit fluorescent display. Digitally accurate readouts accompany the CRT waveform. Error messages and prompts also appear on the display.

Dc volts and ac coupled true RMS volts. Measured through the Ch 1 scope input.

Gated measurements. Use the scope's intensified marker to measure frequency, period, width and to count events within specified portions of the signal.

Auto-ranged, auto-averaged counter/timer. Frequency, period, width, delay time, Δ-time, plus totalize to more than 8 million events —with 7 digits plus exponent displayed.

Auto-ranged DMM. Use floating DMM side inputs with up to 5000-count resolution. Get precise readouts of average dc and true RMS voltage. Measure resistance from milliohms to gigohms.

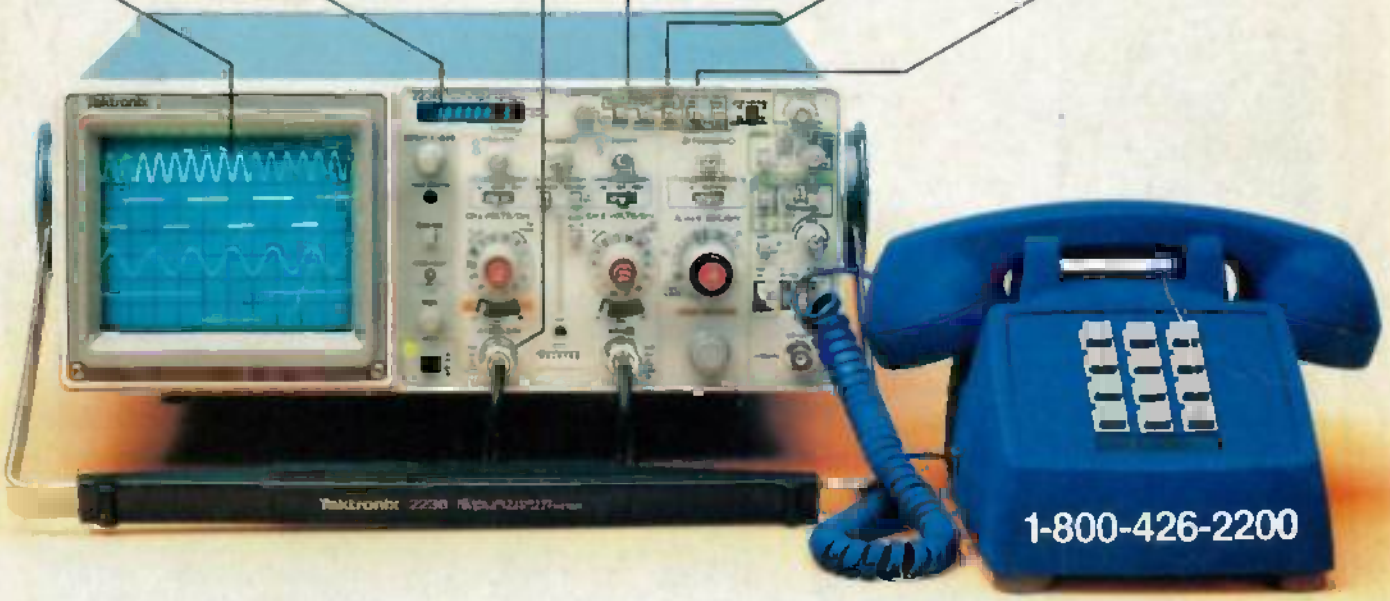

Now make measurements faster, easier, with greater accuracy and user confidence. The Tek 2236 makes gated counter measurements, temperature, time, frequency, resistance and voltage measurements push-button easy. You see results concurrently on the 9-digit numeric readout and CRT display.

Its complete trigger system includes pushbutton trigger view, plus peak-to-peak auto, TV line, TV field, single sweep and normal modes.

At just $2650,* the 2236 includes the industry's first 3-year warranty on all parts and labor, including the CRT.

Integrated measurement system. 3-year warranty. 15-day return policy. And expert advice. One free call gets it all! You can order, or obtain literature, through the Tek National Marketing Center. Technical personnel, expert in scope applications, can answer your questions and expedite delivery. Direct orders include operating and service manuals and worldwide service back-up.

Call toll-free: 1-800-426-2200, Extension 144.

In Oregon, call collect: (503) 627-9000, Ext. 144.
Or write Tektronix, Inc.
P.O. Box 1700
Beaverton, OR 97075

Tektronix®
COMMITTED TO EXCELLENCE

Copyright © 1983, Tektronix, Inc. All rights reserved. TTA-324. *U.S. Domestic price F.O.B. Beaverton, Oregon. Price subject to change.

www.americanradiohistory.com