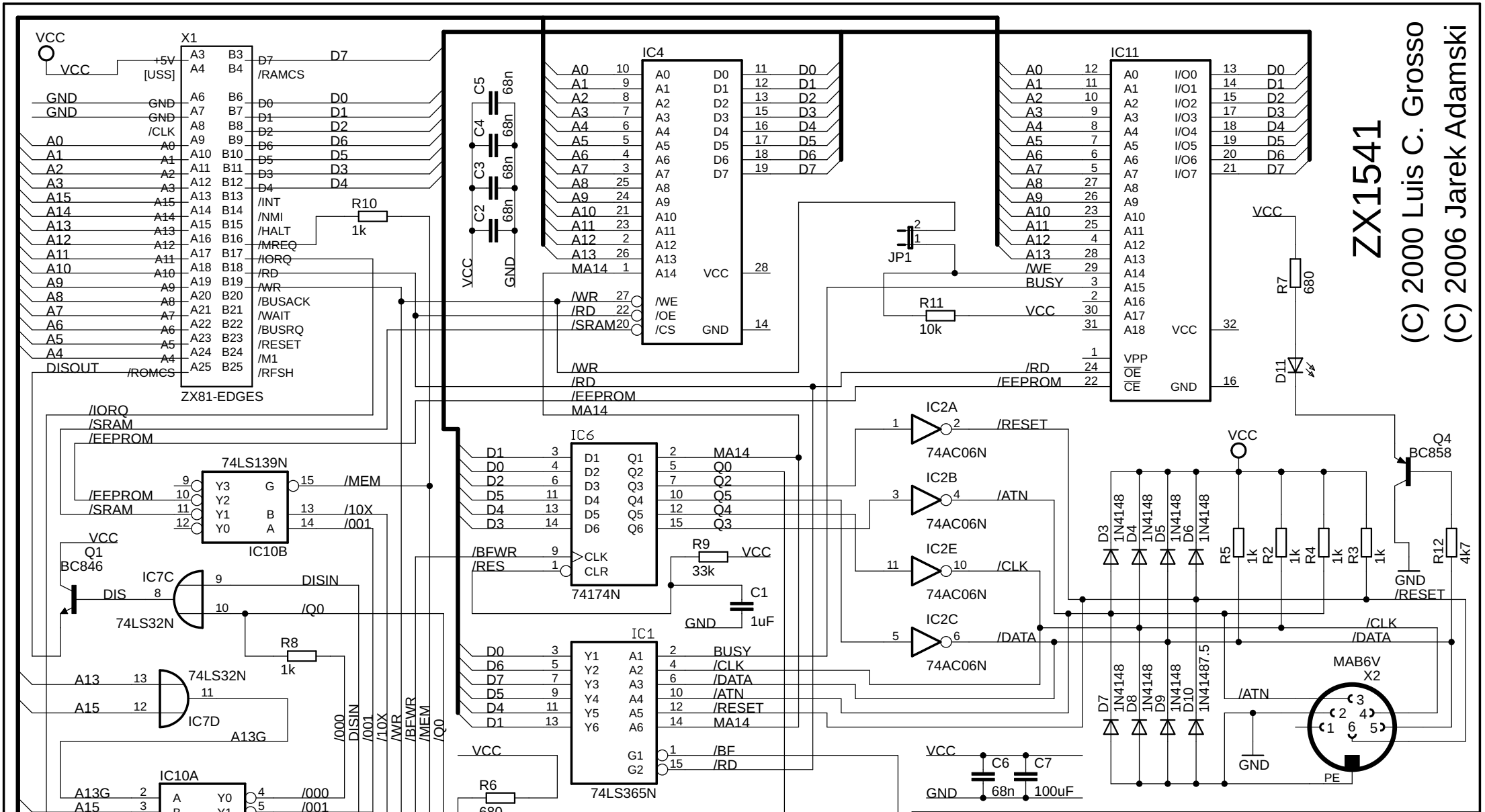

http://8bit.yarek.pl/interface/zx81.zx1541/

Vcc to IEC pull-ups added (01.2020)

TITLE: ZX1541-004

Document Number: ZX1541

REV: v004

Date: 14/01/2020 20:14

Sheet: 1/1