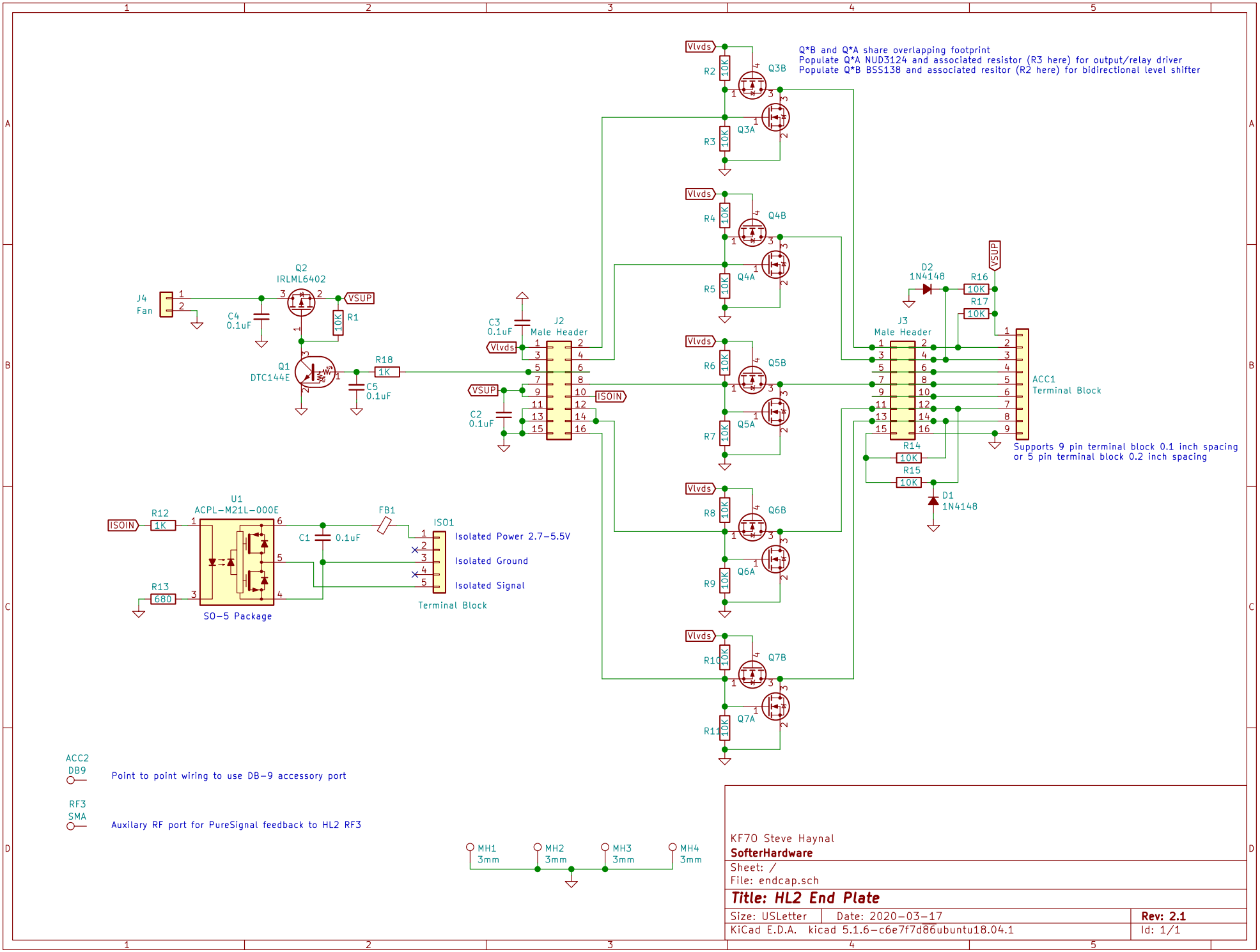
Q*B and Q*A share overlapping footprint
Populate Q*A NUD3124 and associated resistor (R3 here) for output/relay driver
Populate Q*B BSS138 and associated resitor (R2 here) for bidirectional level shifter
Vlvds
VSUP
ISOIN
J4
Fan
Q2
IRLML6402
Q1
DTC144E
R1
10K
R18
1K
C4
0.1uF
C5
0.1uF
C3
0.1uF
C2
0.1uF
J2
Male Header
J3
Male Header
R2
R3
R4
R5
R6
R7
R8
R9
R10
R11
Q3B
Q3A
Q4B
Q4A
Q5B
Q5A
Q6B
Q6A
Q7B
Q7A
D2
1N4148
R16
R17
R14
R15
D1
1N4148
ACC1
Terminal Block
Supports 9 pin terminal block 0.1 inch spacing
or 5 pin terminal block 0.2 inch spacing
U1
ACPL-M21L-000E
R12
1K
R13
680
C1
0.1uF
FB1
ISO1
Isolated Power 2.7-5.5V
Isolated Ground
Isolated Signal
Terminal Block
SO-5 Package
ACC2
DB9
Point to point wiring to use DB-9 accessory port
RF3
SMA
Auxilary RF port for PureSignal feedback to HL2 RF3
MH1
3mm
MH2
3mm
MH3
3mm
MH4
3mm
KF7O Steve Haynal
SofterHardware
Sheet: /
File: endcap.sch
Title: HL2 End Plate
Size: USLetter
Date: 2020-03-17
Rev: 2.1
KiCad E.D.A. kicad 5.1.6-c6e7f7d86ubuntu18.04.1
Id: 1/1