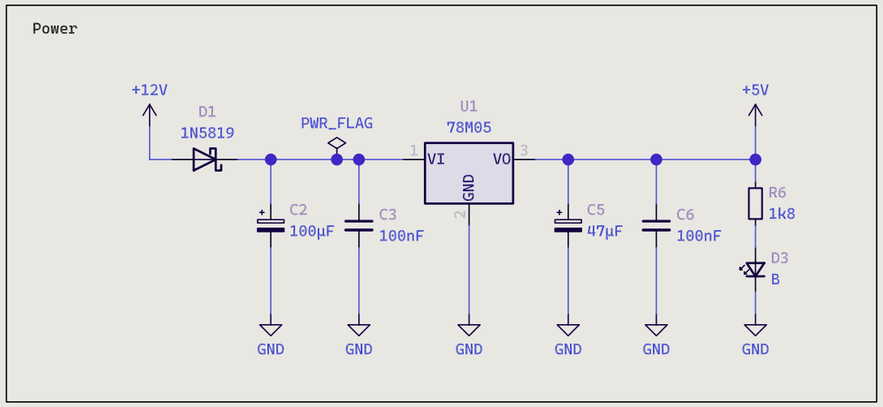

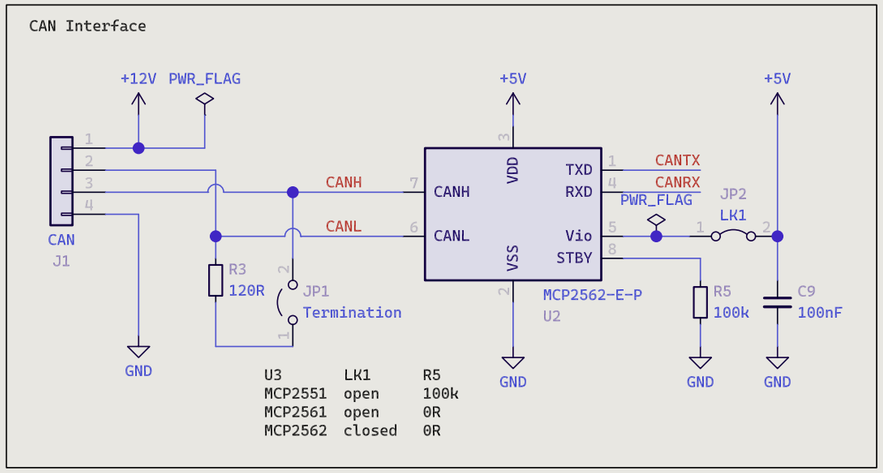

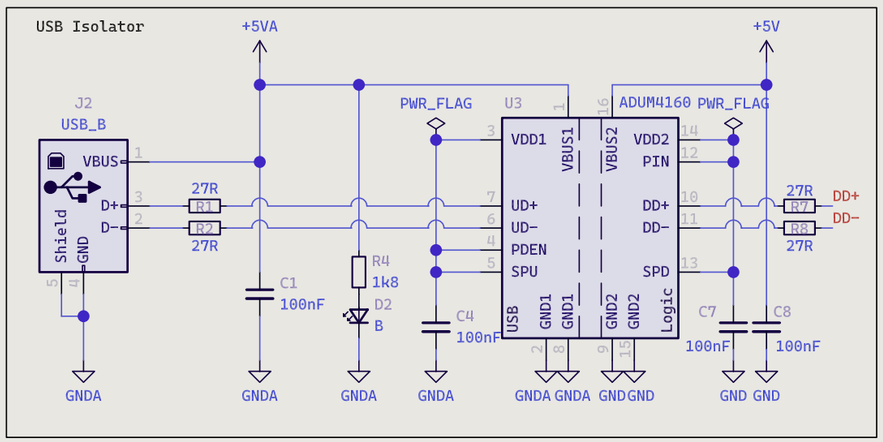

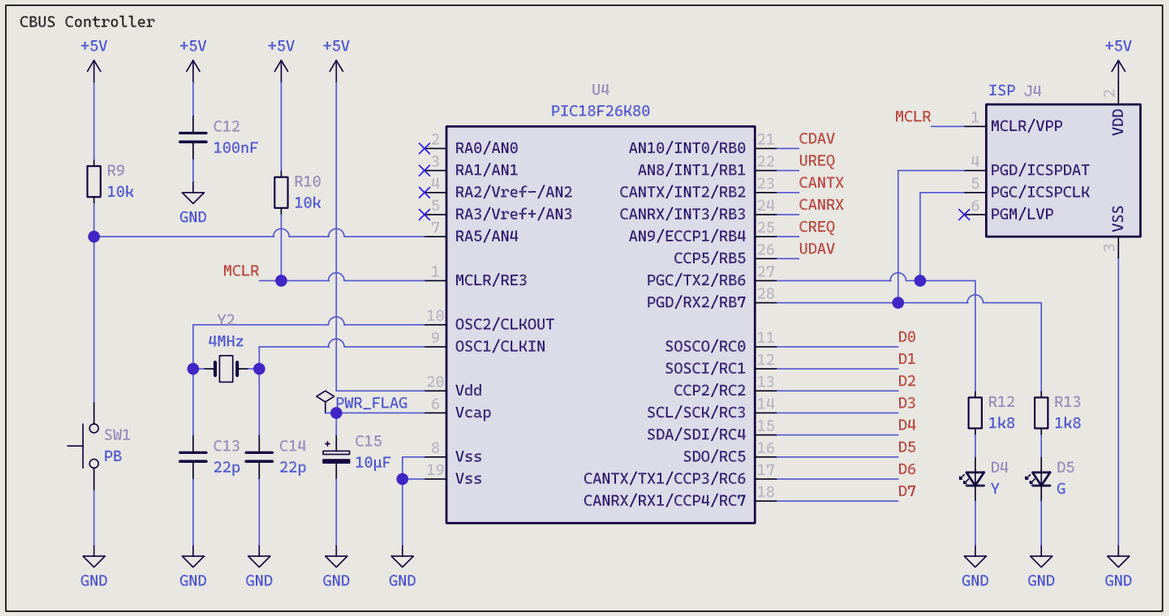

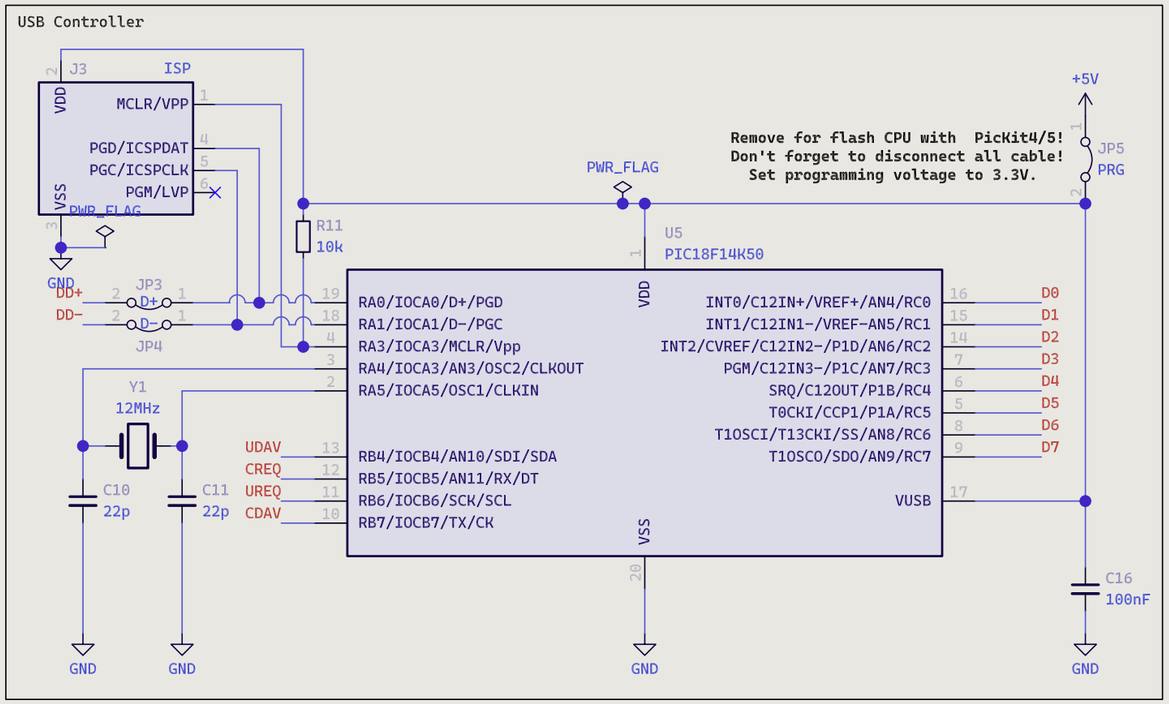

H1 MountingHole
H2 MountingHole
H3 MountingHole
H4 MountingHole

Acknowledgements to Andrew Crosland, Mike Bolton, Pete Brownlow and Ian Hart
CANUSB4 from MERG
Tom, DL7BJ

Sheet: /
File: CANUSB4.kicad_sch

Title: CANUSB4

Size: A4	Date: 2026-01-10	Rev: C4
KiCad E.D.A. 10.0.0		Id: 1/1