SERPAC Electronic Enclosures RB53X06Y10Y 2

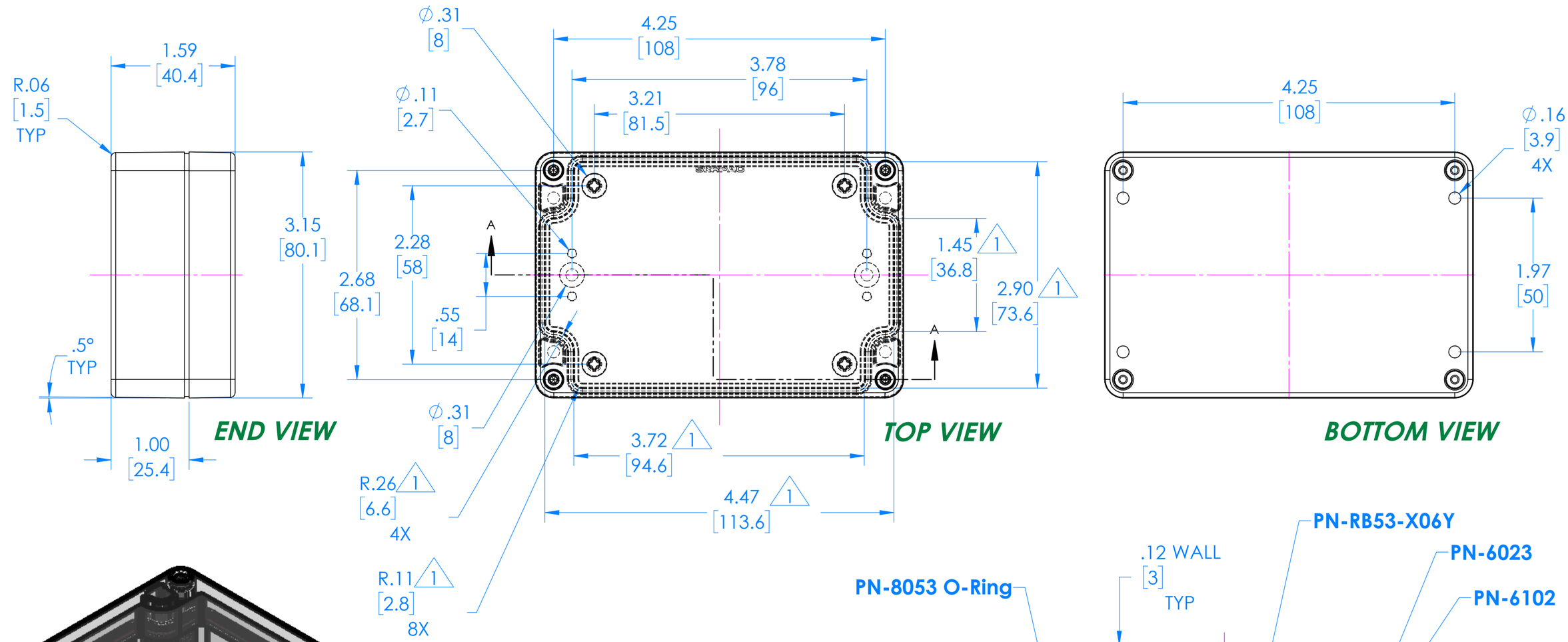

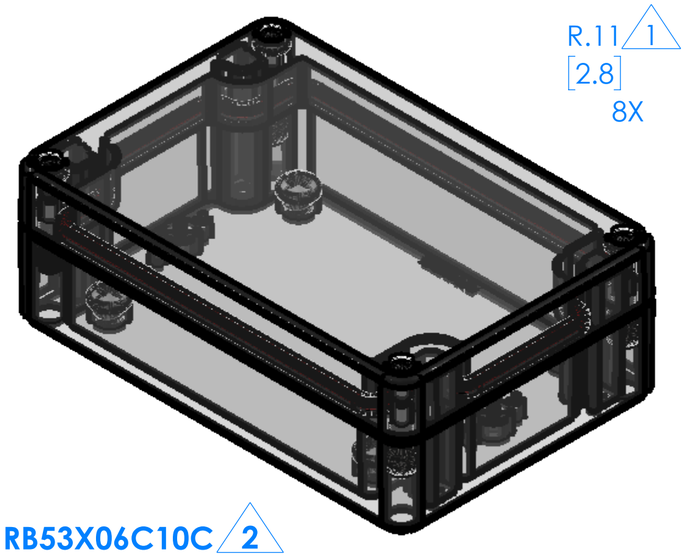

RB53X06C10C 2

(Part shown, no material (X) specified)

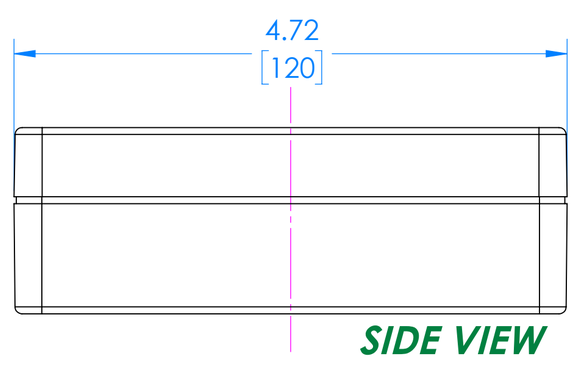

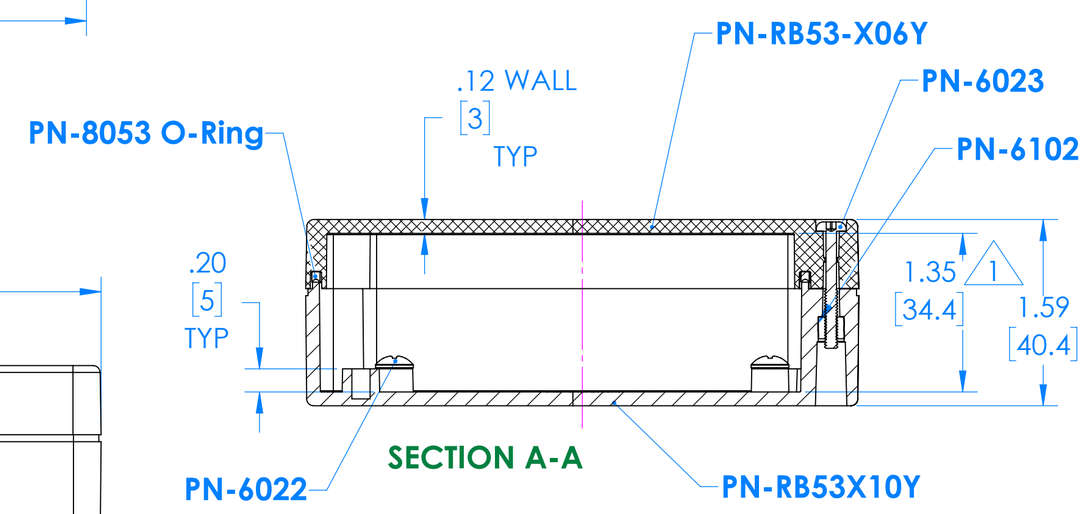

PN	Description
RB53-X06Y	(1) RB53 06, Top
RB53X10Y	(1) RB53 10, Bottom
8053	(1) RB53 O-Ring
6023	(4) #4-40 Torx 10 Hd Screw
6022	(4) #10 High/Low Pan Hd x 1/4"
6102	(4) #4-40 Threaded Insert

1 =INTERIOR DIMENSIONS (@ BOTTOM)

2 =STANDARD COLORS (Y) ARE: BLACK (B), CLEAR (C) AND GRAY (G)
TOPS AND BOTTOMS ALL POSIBLE COMBINATIONS AVAILABLE
STANDARD MATERIALS (X) ARE: POLYCARBONATE (P) AND ABS (A)

-Watertight enclosure meets or exceed Nema 4 and or IP67.

DIMENSIONS in Inch
[mm]

ALL DIMENSIONS ARE ± .010" *7/20/2015*

2009 Wright Ave., La Verne,Ca. 91750
Ph. (626) 331-0517 Fx. (626) 331-8584 serpac.com

SERPAC
Electronic Enclosures

RB53 Circuit Board (Fits all Parts starting with RB53)

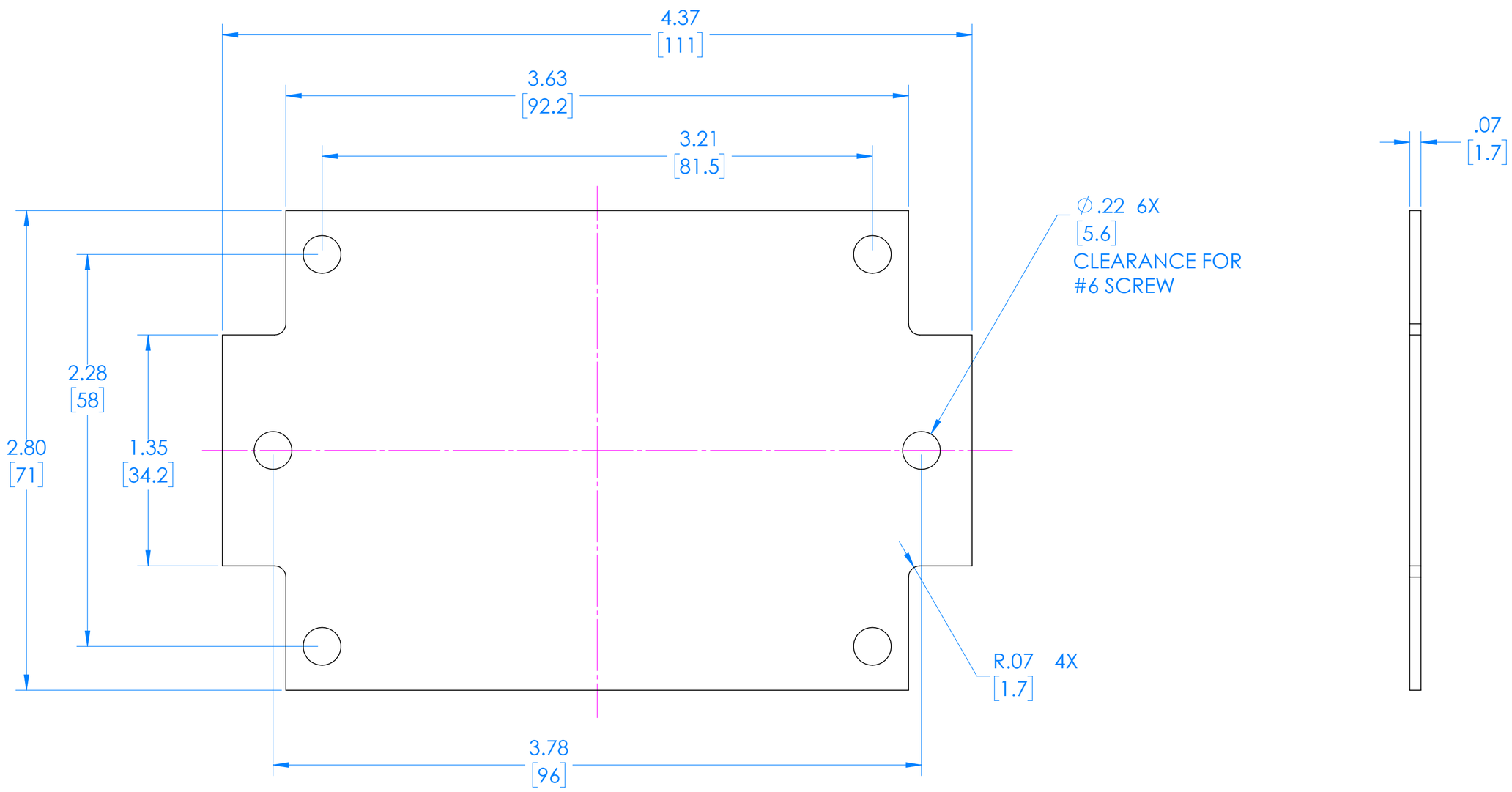

DIMENSIONS in Inch
[mm]

(REFERENCE ONLY)

ALL DIMENSIONS ARE ± .010" *6/22/2021*

2009 Wright Ave, La Verne,Ca. 91750
Ph. (626) 331-0517 Fx. (626) 331-8584 serpac.com