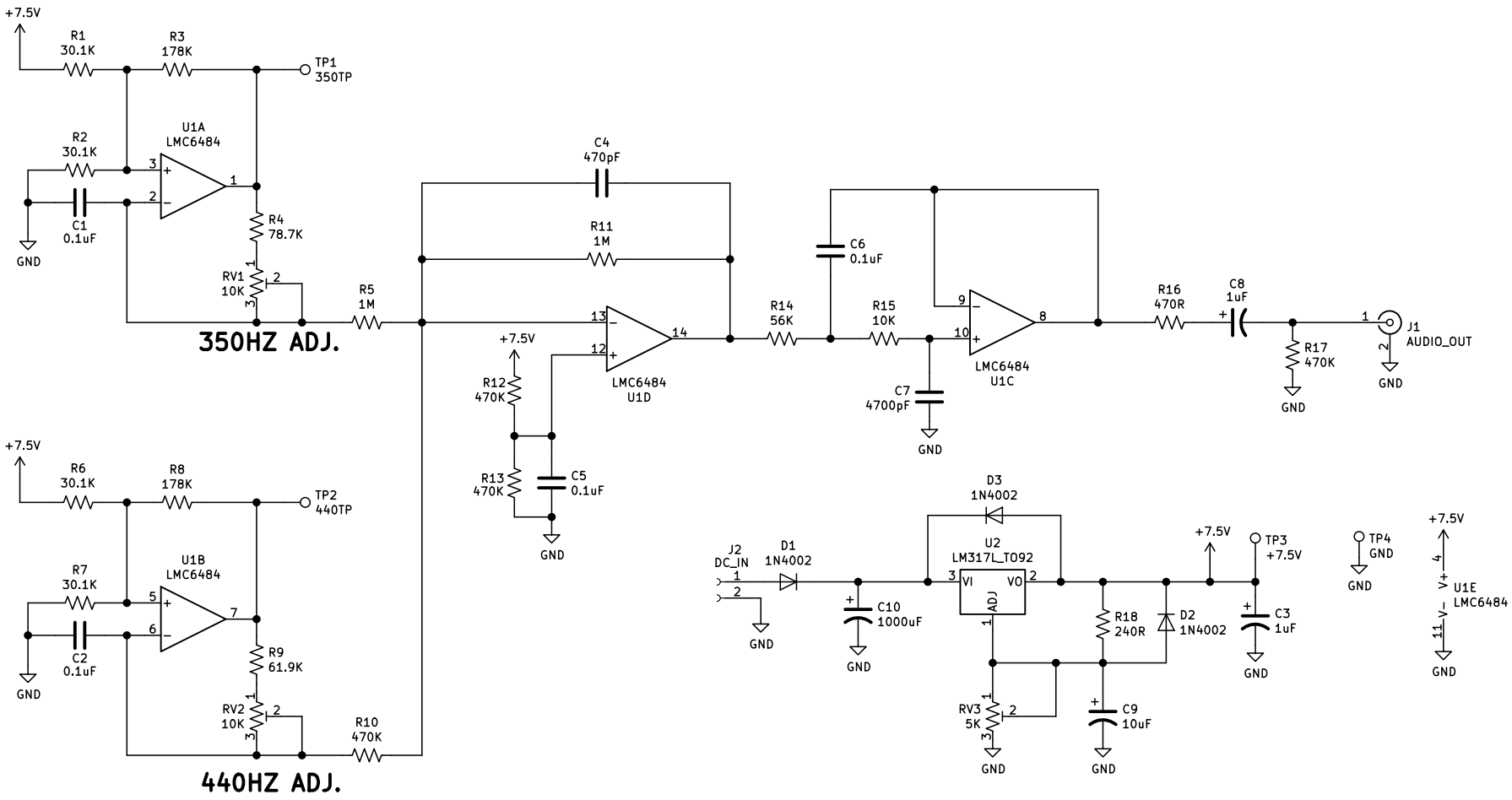

H1 MountingHole
H2 MountingHole
H3 MountingHole
H4 MountingHole

CREDITS GO TO:
©2003 BY ARTHUR HARRISON
www.theremin.us/Circuit_Library/dial_tone_generator.html
DMA

Sheet: /
File: Dial_Tone_Generator.sch

Title: DIAL TONE GENERATOR

Size: A4	Date: 2023-02-25	**Rev: A**
KiCad E.D.A. kicad (5.1.0)-1		Id: 1/1